U.S. Department
of Transportation
Federal Aviation
Administration

Advisory Circular

Subject: Dynamic Evaluation of Seat Restraint Systems and Occupant Protection on Transport Airplanes

Date:
Initiated By: ANM-115

AC No: 25.562-1B
Change: 1

1. PURPOSE.

a. This change removes guidance in paragraph 5e(5)(d) of AC 25.562-1B, which allowed certain methods for showing compliance with the head injury criterion (HIC) required by Title 14, Code of Federal Regulations (14 CFR) 25.562(c)(5). These methods were issued in error and have resulted in conditions where the full required range of occupants might not have the same level of head injury protection. These methods also conflict with Federal Aviation Administration (FAA) Policy Memorandum ANM-115-05-14, *Policy Statement on Acceptable Methods of Compliance with § 25.562(c)(5) for Front Row Passenger Seats*, dated December 14, 2005, for showing compliance with HIC for front row seats. This change eliminates that conflict. An acceptable simplified method for a showing of compliance with HIC for row-to-row seats continues to be the method described in Appendix 4 of this advisory circular (AC) and our policy. We have also added a note for front row seats clarifying how to apply guidance for the 42"/45" setback criteria. Further, we have deleted a reference to canceled AC 25-17 that is no longer relevant and fixed typographical errors within the AC.

b. This change also clarifies applicability of Appendix 4 to seats containing upper torso restraints and airbags; clarifies the range of yaw angles that an applicant should address; and adds guidance for front row seats.

2. PRINCIPAL CHANGES. Change 1 updates AC 25.562-1B, *Dynamic Evaluation of Seat Restraint Systems and Occupant Protection on Transport Airplanes*, dated January 10, 2006. We have added the change number and date of revision at the top of each changed page. We have also marked the changes with a vertical change bar in the margin. Specifically, Change 1 incorporates the following changes:

a. Corrects the figure references in Steps 3 and 3d under paragraph 5d(1).

b. Corrects typographical errors in the second question of Figure 5-2. We also redesigned the figure to improve readability.

c. Adds guidance for upper torso restraints and airbags to the end of paragraph 5e(5)(a) and paragraph 1 of Appendix 4.

d. Clarifies guidance on the range of yaw angles and specifies that a solid strike must be used to show compliance for the range of occupants in paragraph 5e(5)(b).

e. Deletes paragraph 5e(5)(d) and the bulleted list of items that follow it. This is the change that removes the erroneous guidance.

f. Redesignates paragraph 5e(5)(e) as paragraph 5e(5)(d).

g. Adds guidance for limiting the range of occupants to the end of redesignated paragraph 5e(5)(d).

h. Adds new paragraph 5e(5)(d)1 for a test with bulkhead method and glancing blow acceptance.

i. Redesignates the two bulleted paragraphs under paragraph 5e(5)(e) as paragraphs 5e(5)(d)2 and 5e(5)(d)3, respectively.

j. Adds a reference to redesignated paragraph 5e(5)(d)2 specifying where in the AC one can find additional guidance.

k. Deletes the last sentence of redesignated paragraph 5e(5)(d)2.

l. Adds a note under redesignated paragraph 5e(5)(d)2.

m. Corrects the figure reference in paragraph 6e.

n. Corrects the figure reference in paragraph 9c(5)(a)1 and 2.

o. Corrects the figure references in paragraph 10e(3).

p. Corrects a typographical error in paragraph 11b(2) of Appendix 3.

q. Corrects a typographical error in paragraph 11c of Appendix 3.

Page Control Chart

Remove Pages	Dated	Insert Pages	Dated
12	01/10/2006	12	09/30/15
14	01/10/2006	14	09/30/15
19 through 23	01/10/2006	19 through 23	09/30/15
35	01/10/2006	35	09/30/15
42	01/10/2006	42	09/30/15
74 and 75	01/10/2006	74 and 75	09/30/15
86	01/10/2006	86	09/30/15

If you have suggestions for improving this AC, you may use the Advisory Circular Feedback form at the end of this AC.

Jeffrey E. Duven
Manager, Transport Airplane Directorate
Aircraft Certification Service

Advisory Circular

Subject: Dynamic Evaluation of Seat Restraint Systems and Occupant Protection on Transport Airplanes	**Date:** 01/10/06 **Initiated by:** ANM-110	**AC No:** 25.562-1B

1. PURPOSE. This advisory circular (AC) provides information and guidance regarding acceptable means of compliance with the requirements of 14 CFR part 25 applicable to dynamic testing of seats. The AC provides background and discussion of the reasoning behind the test procedures. It also describes the test facilities and equipment necessary to conduct the tests.

2. APPLICABILITY.

a. The guidance provided in this document is directed to airplane manufacturers, modifiers, foreign regulatory authorities, Federal Aviation Administration (FAA) transport airplane type certification engineers, and FAA designees.

b. This material is neither mandatory nor regulatory in nature and does not constitute a regulation. It describes acceptable means, but not the only means, for demonstrating compliance with the applicable regulations. The FAA will consider other methods of demonstrating compliance that an applicant may elect to present While these guidelines are not mandatory, they are derived from extensive FAA and industry experience in determining compliance with the relevant regulations. On the other hand, if we become aware of circumstances that convince us that following this AC would not result in compliance with the applicable regulations, we will not be bound by the terms of this AC, and we may require additional substantiation or design changes as a basis for finding compliance.

c. This material does not change or create any additional regulatory requirements nor does it authorize changes in, or permit deviations from, existing regulatory requirements.

3. CANCELLATION. Advisory Circular 25.562-1A, dated 01/19/96, is canceled.

4. RELATED REGULATIONS. Sections 25.562, 25.785, 25.787, and 25.789 of Title 14, Code of Federal Regulations.

Ali Bahrami
Manager
Transport Airplane Directorate
Aircraft Certification Service

CONTENTS

SECTION	PAGE
1. DEFINITIONS	1
2. DISCUSSION	2
a. Intent of Tests	2
b. Standardized Test Procedures—Reasons and Practicalities	2
c. Standardized Test Procedures—Relationship to Design	2
3. TEST CONDITIONS	4
a. General	4
b. Consideration of Test Criteria	7
4. TEST ARTICLES	8
a. General	8
b. Critical Components	8
c. Family of Seats	9
5. TEST ARTICLE SELECTION AND RELATED TEST SETUP	10
a. General	10
b. Criteria for Selection	11
c. Family of Seats	11
d. Structural Tests	11
e. Injury Criteria	16
f. Deformation for Egress	20
6. TEST FACILITIES	21
a. General	21
b. Deceleration Sled Facilities	21
c. Acceleration Sled Facilities	22
d. Impact-with-rebound Sled Facilities	23
e. Drop Towers	23
7. ANTHROPOMORPHIC TEST DEVICES	24
a. General	24
b. Modification to Measure Pelvic/Lumbar Load	24
c. Other ATD Modifications	25
d. Equivalent ATDs	26
8. INSTRUMENTATION	26
a. General	26
b. Electronic Instrumentation	27
c. Photographic Instrumentation	28

9. TEST FIXTURES 29
a. General 29
b. Floor Deformation 29
c. Other Mounting Configuration Constraints 31
d. Side-facing Seats 38
e. Multiple Row Test Fixtures 38
f. Other Fixture Applications 39

10. TEST PREPARATION 39
a. Preparation for the Tests 39
b. Use of Anthropomorphic Dummies 39
c. Seat Adjustment 40
d. Installation of Instrumentation 40
e. Restraint System Adjustment 41
f. Floor Requirement 42
g. Seat Components 42

11. DATA REQUIREMENTS 45

12. DATA ANALYSIS 45
a. General 45
b. Impact Pulse Shape 45
c. Total Velocity Change 46
d. Head Injury Criterion (HIC) 47
e. Upper Torso Restraint System Load 47
f. Compressive Load Between the Pelvis and Lumbar Column 48
g. Retention of Upper Torso Restraint Straps 48
h. Retention of Pelvic Restraint 49
i. Femur Load 49

13. PASS/FAIL CRITERIA 49

14. TEST FAILURES VS. RETEST 50

15. TEST DOCUMENTATION 51
a. General 51
b. Test Description 52

16. COMPUTER MODELS 53

APPENDICES

APPENDIX 1 – PROCEDURE FOR EVALUATING PULSE SHAPES 54

APPENDIX 2 – SEAT DEFORMATION 59

APPENDIX 3 – SEAT FAMILY DEFINITION 63

APPENDIX 4 — DEMONSTRATING COMPLIANCE WITH HIC FOR REPETITIVE SEAT ROWS 83

APPENDIX 5 — SUBSTANTIATING RETENTION OF ITEMS ATTACHED TO SEATS 91

FIGURES

Figure 3-1 – Seat/Restraint System Dynamic Tests 6

Figure 5-1 – Decision Chart – 16g Test 13

Figure 5-2 – Structural Test Article Decision Tree for Seat Family 14

Figure 5-3 – Restraint Trailing Occupant 18

Figure 7-1 – Installation of Pelvic-Lumbar Load Cell in Part 572B ATD 25

Figure 9-1 – Schematic Floor Deformation Fixture – Seat Legs Attached at Floor Level 30

Figure 9-2 – Floor Warpage Multiple Leg Seat 32

Figure 9-3 – Floor Warpage Multiple Leg Seat 33

Figure 9-4 – Schematic Floor Deformation Fixture – Seat Legs Attached at Side Wall 36

Figure 9-5 – Seats Mounted in an Aisle 37

Figure 10-1 – Measurement of 1g Pre-load 43

Figure 10-2 – Test Orientation, 1g Position 44

1. DEFINITIONS. The following definitions apply to the terms used in this AC. These terms may be used in other documents with different meanings and should, therefore, be verified in the context of those documents.

Anthropomorphic Test Device (ATD)—A device—sometimes called a test "dummy"—used to provide realistic dynamic response representing that of a human.

Baseline Testing—The initial series of tests performed as part of the original certification to substantiate that a family of seats meets regulatory requirements.

Energy Absorbing Device—An energy dissipating element of a seat which is load-rate or peak-load sensitive.

Energy Absorber "Bottom-Out"—The energy absorber "bottoms out" when it reaches its maximum stroke and no longer provides an energy absorption function.

Energy Absorber Rating—The load required to actuate the energy-absorbing device. The "highest rated" energy-absorbing device would be the device that requires the highest load to initiate.

Family of Seats—A group of seat assemblies, regardless of the number of seat places, built from equivalent components in the primary load path. See paragraph 4c and Appendix 3 for an expanded discussion.

Instability Failure—An instantaneous loss of the load-carrying capability of a structural member (for example, the collapse of a column).

Occupant Position—The static relationship of the occupant relative to fixed points on the seat. This is assessed using the Seat Reference Point (SRP), as defined in Society of Automotive Engineers Aerospace Standard AS8049 Revision A.

Rational Analysis—An analysis based on good engineering principles, judgment, and/or accepted methodology. This can include, but is not limited to, static/dynamic load comparison, static strength analysis, comparative static/dynamic strength analysis, linear static and non-linear finite element analysis, and inspection.

Seat Primary Load Path—The components within the seat that carry the load from the point of load application to the structure that reacts the load from the seat system or sub-system. The primary load path may be segmented into its discrete elements, depending on the parameter being evaluated, as follows:

- Structural: from seat belt to fittings which attach the seat system to the airplane structure.
- Lumbar: from bottom cushion to fittings which attach the seat system to the airplane structure.

- Row-to Row Head Injury Criterion (HIC): from point of ATD head contact to the attachment of seat primary structure.
- Head Path (for example, front row or large pitch seats): same as structural.

Similar Design Philosophy - A design which uses the same:

- Method of construction and manufacturing process (for example, machined part versus built-up part),
- Detail part materials (for example, alloys or heat treat),
- Load path,
- Geometry, including section properties, except for minor differences resulting from space limitations within the seat or aircraft interface, and
- Attachment method, except for minor differences resulting from space limitations within the seat

Typically—to be considered "minor"—differences to the geometry and attachment method must be shown to be equivalent to or less critical than the seat tested during "baseline testing" with regard to strength, stiffness, and seat permanent deformation.

2. DISCUSSION.

a. Intent of Tests. The intent of the tests is to evaluate airplane seats, restraints, and related interior systems in order to demonstrate their structural strength and their ability to protect an occupant from serious injuries in a survivable crash. For example, the potential for serious head injury, which is influenced by head strike envelopes and seat pitch, is assessed in the tests. A standardized methodology for making head impact injury assessments is provided in Appendix 4. This methodology should minimize the amount of testing required.

b. Standardized Test Procedures—Reason and Practicalities. The tests described in this AC are standardized procedures generally regarded as the minimum necessary to demonstrate compliance. Standardized procedures seek to obtain consistent results between different test facilities. These facilities may be of varying types, as described in paragraph 6. Often they are not under the direct control of the designer or manufacturer of the article under test, and they may be primarily dedicated to testing which is not related to the aerospace industry. To foster industry standardization, this AC describes many of the procedures and evaluations that are already accepted as standards by government and commercial test facilities. These procedures have been modified only as necessary for the specific testing of civil airplane systems.

c. Standardized Test Procedures—Relationship to Design. As stated above, the tests are standardized by necessity. However, the seat/restraint should be designed to protect the occupant under all conditions within the impact envelope specified in § 25.562.

(1) Occupant representation. The dynamic tests are performed with an anthropomorphic test device (ATD)—representing approximately the 50th percentile male occupant—in accordance with 49 CFR part 572.

(a) Occupant Weight. Although the basic structural capability of the seat/restraint system is not demonstrated for occupants of other weights, substantiating the seat using the 50th percentile ATD protects the widest range of occupants. Seats that are optimized for occupants at either extreme would have stiffness characteristics that would be incompatible with occupant mass at the other extreme. That is, such seats would either be too stiff to absorb energy for lighter occupants or too flexible to provide protection for heavier occupants.

(b) Occupant Size (dimensions). The seat should not be point-designed around the 50th percentile occupant size. The designer should consider other design factors that are directly influenced by occupant size, such as energy absorbing systems, restraint system design and anchorage locations, and seat adjustments.

(2) Test conditions. This AC describes two basic types of dynamic test procedures (see Figure 3-1): a test where the predominant impact vector is vertical and a test where the dominant impact vector is horizontal. These procedures address the tests required to demonstrate compliance for one seat and restraint system installation. Typical use of a seat model on a particular airplane will involve variations of seat design and installation. Additional tests may be necessary to demonstrate compliance for these variations, if they cannot be adequately addressed by analysis. This point is discussed at length in paragraph 5, and a methodology for establishing a seat "family" is described in Appendix 3.

(3) Pre-test floor deformation. For certain structural evaluations, the test procedure requires that the seat/floor interface should be deformed. This procedure provides a measure of the seat's ability to deform and absorb energy during an impact. The seat and restraint system should also perform properly, if the floor remains undeformed.

(4) Head impact. Occupant head impact with the interior of the airplane is evaluated by using a Head Injury Criterion (HIC) that can be measured directly in the tests described in this AC or in alternative tests. The HIC is measured on the most critical surface within the ±10 degrees yaw envelope (measurement of the HIC does not supersede the requirements of § 25.785, which may have a different head strike envelope than § 25.562). The HIC does not evaluate injuries that occur at low impact velocities from contact with surfaces having small contact areas or sharp edges, especially if those surfaces are relatively rigid. These types of injuries require assessment in accordance with § 25.785.

(5) Femur injury. Extensive seat testing has shown that the femur loading criterion is not exceeded when seats are tested in accordance with the conditions defined in this AC. For this reason, the femur loads need not be recorded in the individual test, if

compliance can be shown by rational, comparative analysis using data from previous tests.

> **NOTE:** There may be several other aspects of the standardized test procedure that need to be considered when determining the test program required to demonstrate compliance or interpret the test results. The extent of the test program will depend on the most critical case determination and its applicability to other configurations. Further discussion on this aspect of testing is provided in paragraph 5.

3. TEST CONDITIONS

a. General. A minimum of two dynamic tests is required to assess the performance of an airplane seat, restraints, and related interior system. The seat, the restraint, and the nearby interior are all considered to act together to provide protection to the occupant during a crash. For side-facing seats, there may be additional criteria necessary to determine that the seats provide the level of safety intended by § 25.562. (See paragraph 9d for additional considerations regarding side-facing seats.)

(1) Test 1 (Figure 3-1), as a single row seat test, determines the performance of the system in a test condition where the predominant impact force component is along the spinal column of the occupant in combination with a forward impact force component. This test evaluates the structural adequacy of the seat, critical pelvic/lumbar column forces, and permanent deformation of the structure under combined downward and forward impact loading. The test may also yield data on ATD head displacement, velocity, and acceleration time histories.

(2) Test 2 (Figure 3-1), as a single row seat test, determines the performance of a system in a test condition where the predominant impact force component is along the longitudinal axis of the airplane in combination with a lateral impact force component. This test evaluates the structural adequacy of the seat, and permanent deformation of the structure. It also evaluates behavior and loads of the pelvic restraint and, if applicable, of the upper torso restraint. The test may also yield data on ATD head displacement, velocity, and acceleration time histories as well as the seat leg loads imposed on the seat tracks or attachment fittings.

This test requires simulating deformation between the seat and airplane floor by deforming the test fixture, as respectively prescribed in Figures 6 and 7 for single occupant and multiple occupant seats, prior to applying the dynamic impact conditions. The purpose is to demonstrate that the seat/restraint system will remain attached to the airframe and perform properly, even though the airplane and/or seat are deformed by the forces associated with a crash.

(3) For seats placed in repetitive rows, an additional test condition using two seats in tandem placed at representative fore and aft distance between the seats (seat pitch) directly evaluates injury of the head and femur. This test is similar to Test 2 with

or without the floor deformation. (Floor deformation is required, if the test also demonstrates structural performance.) These injury criteria are dependent on seat pitch, seat positions occupied, and the effect of hard structures within the path of head excursions in the ±10 degrees yaw attitude range of the Test 2 conditions. See Appendix 4 for a standardized procedure for evaluating row-to-row head impact.

> **NOTE**: It may be possible to evaluate the HIC using alternative tests. Specific methodologies will require acceptance for certification. (See paragraph 12d.)

	Test 1	Test 2
Illustration shows a forward facing seat Inertial load shown by arrow	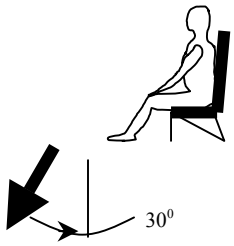	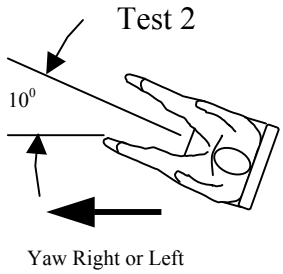
Min V_1 m/s (ft./s)	10.67 (35)	13.41 (44)
Max t, s	0.08	0.09
Min G	14	16
Deform Floor		
Degrees Roll	0	10
Degrees pitch	0	10

Test Pulse simulating Aircraft Floor Deceleration -Time History

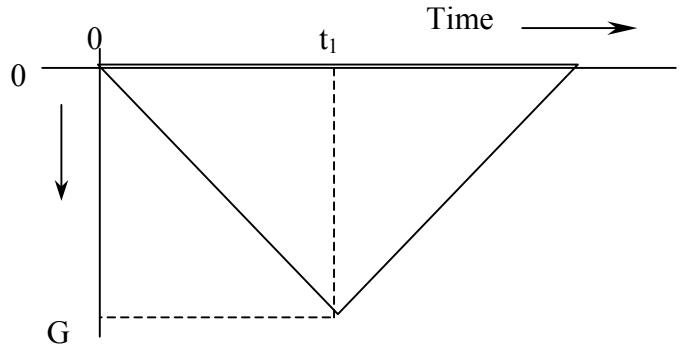

t_1=Rise time
V_1= Impact velocity

The ideal pulse is a symmetrical isosceles triangle

Figure 3-1. Seat/Restraint System Dynamic Tests

b. Consideration of Test Criteria. The tests should be planned to achieve the "most critical" conditions for the criteria to be evaluated during each test. Philosophically, the objective of the requirement is to test the critical structural configuration (that is, the seat with the critically stressed components in the primary load path). The primary structural load path and other components that influence occupant injury criteria (for example, HIC or shoulder restraint retention) are evaluated to generate the baseline certification tests. As much as practical, all pass/fail criteria should be assessed during tests that are conducted to show seat structural compliance. Additional structural tests should not be generated to evaluate parts of the seat that are not in the primary load path or do not influence occupant injury criteria. (For example, a dynamic test would not be conducted to specifically evaluate the most critical load on a baggage bar if that is different from the most critical test for the seat structure.)

(1) For multiple place seats, a rational structural analysis is used to determine the number and seat location for the ATDs and the direction for seat yaw in Test 2 to provide the most critical seat structural test. (A detailed procedure is provided in paragraph 5.) The floor deformation procedure should be selected to increase the load on the highest loaded seat leg and to load the floor track or fitting in the most severe manner. However, a special procedure has been provided, as discussed in paragraph 9c(2), to account for seats that have more than two pairs of legs.

(2) If multiple-row testing is used to gather data to assess head and femur injury protection in passenger seats, the seat pitch must be selected so that the head would be most likely to contact hard structure in the forward seat row. The effect of the 10 degree yaw in Test 2 and the seat back breakover should be considered. (A detailed procedure is provided in Appendix 4.) Results from previous tests or rational analysis may be used to estimate the head strike path of similar seats in similar installations. The front row may be unoccupied.

(3) The separate requirements of §§ 25.562(c)(1) and (c)(3) can result in tests to address both directions of yaw. Section 25.562(b)(2) explicitly requires testing in the direction that would increase the likelihood that the occupant could come out of the restraint (typically over the trailing shoulder). Section 25.562(c)(1) requires assessment of the maximum upper torso restraint loads, which requires testing in the critical structural direction. However, experience has shown that most upper torso restraint geometries have good retention characteristics and can be justified on the basis of similarity to previously tested installations. Thus, if there are test data showing retention (belt over the trailing shoulder) that are applicable to the current installation, only the yaw direction for the critical structural test need be conducted for that installation. Occupant retention should be assessed during this test and the applicability of previous testing verified. In most cases this should be sufficient, and tests in both yaw directions would not be required.

(4) If a seat has vertical or horizontal adjustments, it is tested in the position that produces the most critical loads on the seat structure (typically the highest vertical position). Positions prohibited for takeoff and landing need not be considered. Seat adjustments that do not have a significant effect on structural loading (for example, thigh support angle, lumbar support, or armrest and headrest positions) are tested in the design positions for the 50th percentile male occupant, unless special requirements dictate the positions allowed for takeoff and landing. In addition, height adjustment should be relative to the interior envelope as it relates to the upper contour (ceiling) of the airplane whenever a specific seat design is approved in a particular airplane. For example, the seat need only be raised to the point where the head of the 50th percentile ATD contacts the upper portion of the airplane interior. Height adjustment to a level above the normal 50th percentile male location is intended to validate the strength of the seat and is not related to testing for a range of occupant sizes.

4. TEST ARTICLES.

a. General. In all cases, the test article must be representative of the final production article in all structural elements and must include the seat cushions, restraints, and armrests. It must also include a functioning position adjustment mechanism and correctly adjusted breakover (if present). Food trays or any other service items or accouterments that are part of the seat design must be representative of the final production item, if they influence seat stiffness or injury criteria. Otherwise, they and any other items of mass that are carried on or positioned by the seat structure need only be representative masses (see paragraph 10g). Examples include weights simulating luggage carried by luggage restraint bars [9.1 kilograms (20 lb) per passenger place], fire extinguishers, survival equipment, and emergency equipment. If these items of mass are placed in a position that could limit the function of an energy-absorbing feature in the test article, they should be of representative shape and stiffness as well as weight.

(1) If items of mass of any significance detach, they could become projectiles or impede evacuation. Detachment of certain items, such as an in-arm ashtray or decorative trim, can be considered inconsequential and should not be grounds for re-test. (The means of restraint should be improved, however.) In any case, detachment of an item of mass should not leave any sharp or injurious edges. Once retention of an item of mass has been demonstrated, subsequent tests may be conducted with the item secured for test purposes.

(2) Appendix 5 discusses means of compliance in greater detail. This AC does not establish operational requirements for equipment attached to the seat system. Function of equipment or systems after the test is not required.

b. Critical Components. Components that are critical to the performance of the seat should be assessed according to the test parameter(s) being investigated. What is critical for evaluation of seat structural performance may not be critical for an assessment of HIC. However, design changes made as a result of one performance parameter can

influence other performance parameters. The following summarizes critical elements relative to the assessment criteria.

(1) The primary load path for structural tests typically includes seat components, such as seat legs, lateral beams (cross tubes), spreaders, cushion supports and cushions, seatbelts and their attachments, attachments between structural members, seat track fittings, and energy absorbers. (Observe that energy-absorbers are normally integrated into the other seat components.) The strength and deformation responses of these members are evaluated during structural tests.

(2) The primary load path for lumbar load tests typically includes bottom cushions, bottom cushion supports, and lateral beams (cross tubes). Also part of this load path are seat legs, spreaders, attachments between structural members, seat track fittings, and energy absorbers.

(3) The primary load path for row-to-row HIC tests typically includes components in the seat assemblies, such as those installed on the seat back (for example, food tray tables, video monitors, and telephones), recline mechanism, breakover devices, seat back energy absorbers, seat back attachment hardware and, in some cases, arm rests.

(4) The primary load path for head/knee path tests is typically the same as that for the structural tests.

(5) Some components affect the positioning of the occupant in the seat place that in turn can influence ATD dynamic response and occupant injury criteria. Examples include seat bottom cushions, bottom cushion support, armrests, and seat backs.

c. Family of Seats.

(1) The concept of a family of seats is a design philosophy. A family of seats is a group of seat assemblies (regardless of the number of seat places) built from equivalent components in the primary load path. By definition, aft and side-facing seats are considered a separate family of seats from forward-facing seats. Most seats are, to some extent, part of a "family." The intent of the family concept is to permit a simplified test article selection process. A group of seats can be designed either using the same design concept or as separate entities (non-family members). If the components in the seat design are carefully considered in advance, the baseline testing described in this document may substantiate the majority or all of the seat part numbers for compliance with § 25.562. Additional tests beyond the baseline may be required to substantiate variations in seat design that are beyond the basic family principles. In the context of Appendix 3, the procedures for substantiation depend on a rigorous definition of the "family" and are valid only if we adhere to that definition.

(2) The family of seats is defined based on design characteristics. Criticality assessments determine, in part, the scope of the test program within a family, not between families. Discussions of the definition of a family of seats and determinations of

structural criticality are intended to be complementary. Determinations of structural criticality assume that the family of seats has been established and that variations within the family will be substantiated either by tests or analysis. The decision whether to conduct tests or perform analysis is made based on the guidelines given, with the underlying assumption that such choices are made within a well-defined family of seats. Therefore, a comparison between families to establish that one design is more structurally critical than another is not addressed or recommended by this procedure and is not considered practical.

5. TEST ARTICLE SELECTION AND RELATED TEST SETUP.

a. General. Test articles are selected in order to create the critical case condition for the parameters being measured. As a minimum, the most highly stressed configuration is selected for the dynamic tests, so that other configurations could be accepted by comparison with that configuration. For the test article selection to be valid, there must be sufficient design commonality among the seats, so that testing one seat will qualify another. As previously mentioned, this approach is predicated on seats being part of a family of seats. However, the principles of test article selection are valid for individual seats as well as families of seats, so the procedures provided could be applied to a "family" consisting of only one seat. Test article selection for family design concepts is discussed in more detail in paragraphs 5.d. and 5 e. The following additional items should be considered in choosing test articles.

(1) If a multiple-place seat incorporates energy-absorbing or load-limiting features that are necessary to meet the test criteria or other requirements, a partially occupied seat may adversely affect the performance of that seat. In such a case, rational analysis or additional testing must show that the seat will continue to perform as intended, even with fewer occupants.

(2) Experience has shown that small details in the design often cause problems in meeting the test performance criteria. If different configurations of the same basic design of primary load-path members, especially joints or fasteners differ in detail design, the performance of each detail design should be demonstrated in a dynamic test.

(3) Additional dynamic impact testing may be required for a seat with features that could affect the non-structural performance criteria of § 25.562(c)(1-6), even though the test may not be the most critical case based on structural performance. For example, if in one of the design configurations, the restraint system attachment points are located so that the pelvic restraint is more likely to slip above the ATD's pelvis during the impact, that configuration should also be dynamically tested—even though the structural loading might be less than the critical configuration in a family of seats.

(4) Evaluation of typical dress cover materials, including synthetic fabrics, natural fabrics, and leather, has shown that the effect on test results is small, considering other factors such as occupant clothing. These typical materials can be used on a seat without testing more than one material or they can be substituted on an already

certificated seat. It is possible that some unusual seat surfaces that exhibit very low friction coefficients may require some additional substantiation. An unusual seat surface, for example, would be hard plastic.

(5) Test article selection (whether or not from the family of seats) is dependent on the installation and, in particular, on the seat track. Installation on a different seat track will require substantiation by test or rational analysis.

b. Criteria for Selection. The two main performance criteria used for test article selection are structural strength of the primary load path and injury criteria. In certain cases, emergency egress considerations may be necessary. For example, retention of a footrest may not be critical in the primary load path but could significantly impede egress at an exit if it were to deploy.

(1) Compliance with all parts of § 25.562 can be demonstrated with data obtained from tests using these selection criteria.

(2) To the extent possible, tests are conducted to maximize the amount of useable data and to address more than one performance criterion.

c. Family of Seats When a family of seats is identified using the procedures identified in Appendix 3, a test article selection process based on those procedures can be followed that will minimize the amount of testing required and maximize the usability of the data generated. This process is intended to be integrated with the seat design and not applied to seats *post hoc* in order to reduce testing once a program is completed or new designs are produced. However, assuming the family definition is robust, modifications to family members can be made or new models can be added to the family following the procedures given. Comparisons between seats in a family should always refer to a seat that was actually tested, rather than two seats that have not been tested. In principle, the seats that have been tested are determined to be critical for the parameters being measured, and any subsequent comparison should be made against the critical configuration. See Appendix 3 for a detailed discussion of the variation in design intended to be inclusive of a family using this process.

d. Structural Tests for seats with the family design concepts (see §§ 25.562(c)(7) and (8)).

(1) Substantiation of the 16g longitudinal load condition for each family of seats:

Step 1: Determine the 9g forward static interface loads (or any other standard load) for all seats. It is generally accepted that the interface loads calculated at 0° are sufficient to determine the most critical seat. Special seat design features may require interface load calculations that would take into account the aircraft tapered sections. All occupancy variations and combinations shall be considered for each seat (from unoccupied to fully occupied). The critical test case may be determined by analysis (Finite Element Method [FEM] or static interface loads) or by using test data.

Step 2: Group the seats into two groups: Seats with two legs and seats with more than two legs.

Step 3: For each group of seats (see Figure 5-1):

Step 3a: Compare the aft fitting resultant loads of the seats within each group and identify the seat with the highest load. This seat will be tested.

Step 3b: Subgroup the seats by lateral leg spacing.

NOTE: For groups with more than two legs, there will be multiple lateral leg spacing. The sub-grouping of seats should be based on the leg-pair with the minimum lateral leg spacing.

Step 3c: Identify the subgroup with the minimum (narrowest) lateral leg spacing and identify the seat with the highest seat leg aft fitting resultant load within that subgroup.

Step 3d: If the aft fitting resultant load of the seat identified in step 3c (narrowest leg spacing) is greater than 80 percent of the highest load found on the seat selected for test in step 3a, then the seat identified in step 3c will also be tested, or a single test combining both conditions will be necessary. If the aft-fitting resultant load of the seat identified in step 3c (narrowest leg spacing) is less than 80 percent of the highest load found on the seat selected for test in step 3a, then this seat will only require static substantiation of its ability to tolerate floor deformation. (See Figure 5-2).

Step 3e: Conduct a 16g longitudinal dynamic test of each seat selected in steps 3a and 3d from each group. If the seats selected in steps 3a and 3d do not include the seat with the most critical beam load, that seat should be tested as well.

Step 3f: The occupancy that produced the highest calculated seat leg resultant tension reaction in the aft fitting is used for the test, unless the load of the fully occupied seat is within 10 percent of the highest seat leg load. Due to the statically indeterminate nature of seat structure, there are assumptions used to calculate interface loads, which will result in some uncertainty. Data indicate that calculated reactions within 10 percent of one another are effectively equivalent. In such cases, a fully occupied seat will impart an overall greater load than a partially occupied seat. Therefore, if the fully occupied seat leg load is within 10 percent of the highest loaded seat leg, test the seat fully occupied.

Step 3g: Select yaw, pitch, and roll for test setup.

NOTE: If any seat in the family is intended to be installed on canted seat tracks, the yaw angle for the test for those seats should be 10 degrees plus or minus the aircraft installation cant angle (if it is more critical) depending on which yaw angle maximizes the calculated reaction. (A test

yaw angle greater than the minimum required may be used to accommodate the test fixture adjustment capability.) Cant angles of 2 degrees or less may be neglected.

Step 3h: The mass of baggage, life vests, and literature pocket contents should be installed at each seat place, regardless of seat occupancy.

Step 3i: Retention of a specific item of mass, including emergency equipment, need only be demonstrated once during the 16g longitudinal load condition, if suitable retention using the production means of attachment is shown by dynamic test. The item of mass may be restrained for all other 16g longitudinal tests.

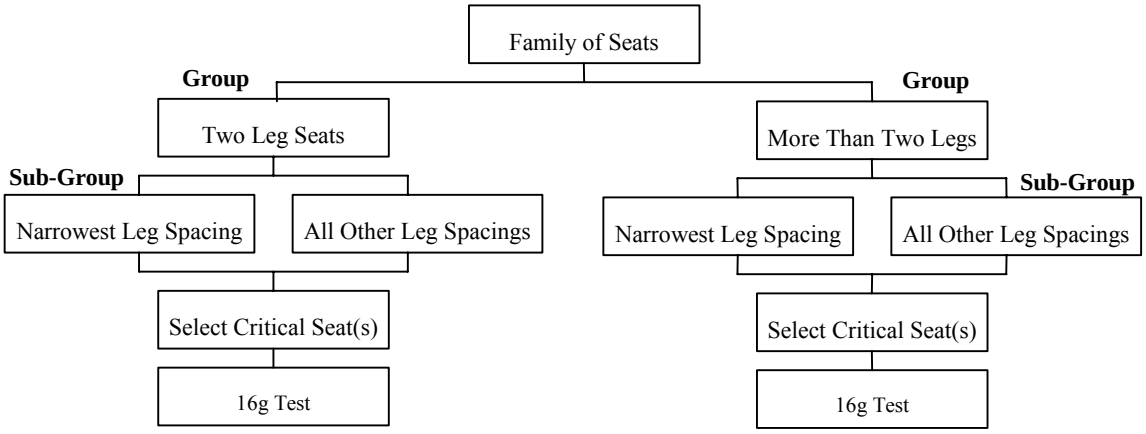

See next figure

Figure 5-1. Decision Chart—16g Test

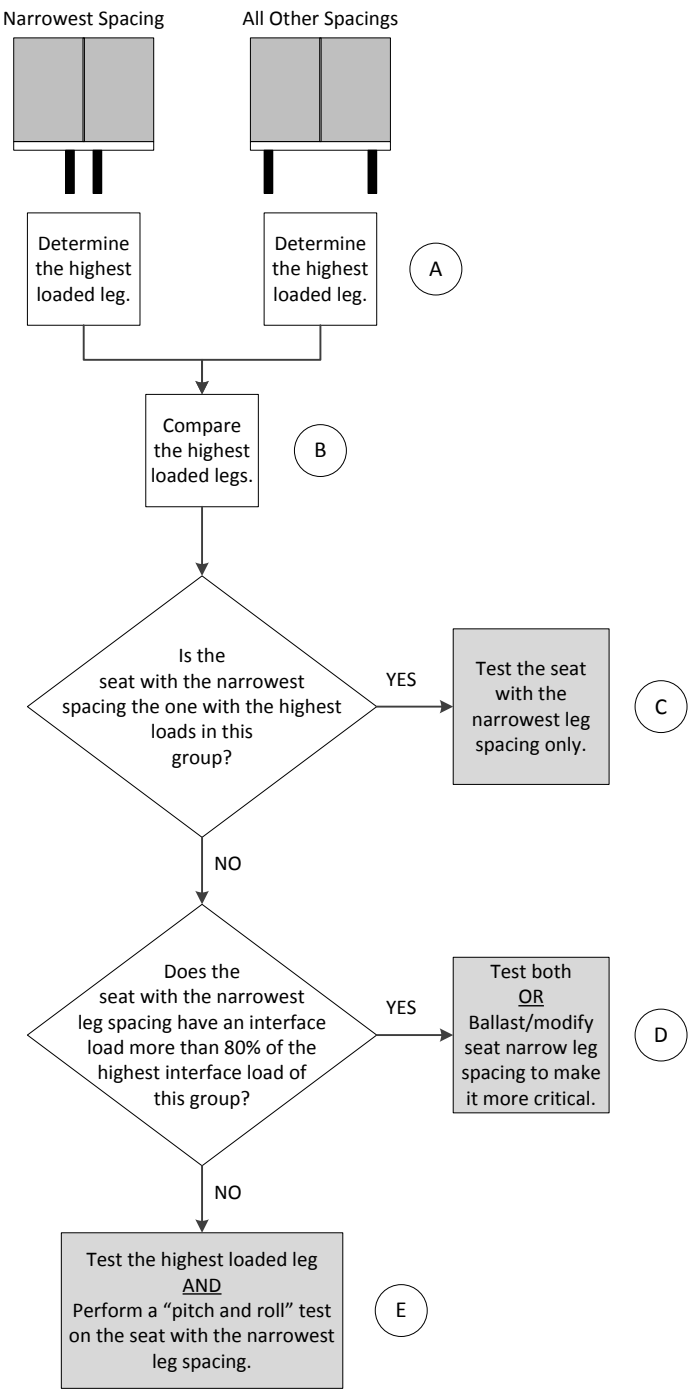

Figure 5-2. Structural Test Article Decision Tree for Seat Family

NOTE: A "Pitch and Roll" test is a static floor deformation test used to substantiate the flexibility of the seat with the narrowest leg spacing. Pass/fail criteria for this test are the same as for any static or dynamic structural test. However, no injury or other performance criteria are assessed by this test.

A. 9g static interface loads are the generally accepted indicator of seat structure criticality. Based on this analysis, the highest loaded leg will indicate the most critical configuration to test. (Other features may drive criticality, e.g., beam bending, in addition to the interface loads analysis.) Using 9g static interface loads, identify the highest loaded leg for the seats with the narrowest leg spacing sub-group and the highest loaded leg for the seat from the wider spaced-leg sub-group(s).

B. Compare the interface loads of the highest loaded seat leg from the sub-groups(s). It is generally accepted that the seat with the narrowest leg spacing will exhibit the highest pre-loads during "pitch & roll."

C. By testing the seat with the narrowest leg spacing, the test covers the highest loaded leg and the highest pre-load from "pitch & roll."

D. If the static interface loads for the seat with narrowest leg spacing is within 20% of the seat with the wide leg spacing, it cannot be easily determined which is the more critical to test. The pre-load from "pitch & roll" contributes more to the criticality of the seat with narrow leg spacing. Since the most critical seat cannot be easily determined, either test both seats or create the critical case, using the narrow seat so that it has the more critical interface loads and the highest pre-load from "pitch & roll."

Test only the narrow seat. The critical case can be created one of two ways, either by ballasting the seat so that the interface loads are increased to match those of the absolute critical seat or by modifying the seat to increase the structural criticality. These are two different approaches, and will change the load distribution on the seat, which is acceptable as long as it maintains criticality.

NOTE: Modification of the seat should be limited to relocating seat legs along a beam to create a more critical overhang. Modifications should not change seat hardware.

E. If the highest static interface load on the seat with the narrowest leg spacing is less than 80% of the highest loaded seat in this group, it can be assumed that the narrow seat with the higher pre-load not be more critical. Only the seat with the highest leg load need be dynamically tested. A check must still be made on the narrowest leg spacing seat to ensure the structure has enough flexibility to accommodate floor warpage. This seat should be placed on a static test fixture and the floor warpage applied. No dynamic test of this configuration is required. This is a test of the primary structure. No ATDs or other additions to test article/set-up are required.

(2) Substantiation of the 14g download condition for each family of seats:

Step 1. Determine the 14g downward static interface loads (or any other standard load) for all seats. Compare the aft fitting resultant loads of all seats in the family, regardless of the number of legs on the seat, and identify the seat with the highest load. This will usually be the same seat that was selected for the critical forward structural test. This one seat will be tested.

Step 2. Conduct a 14g vertical dynamic test of the seat selected above.

Step 3. Use full occupancy for this test. This is to ensure that the maximum compressive load is put on the structure.

Step 4. Install the mass of life vests and literature pocket contents at each seat place, regardless of seat occupancy. Ballast may be used for non-critical parts of the seat (for example, under seat In-Flight Entertainment (IFE) boxes). However, if this test is also used to acquire lumbar loads, the criticality of parts should be assessed with that in mind. (See paragraph e(2)(b) discussion below regarding compliance with § 25.562(c)(2).)

NOTE: Weights representing under-seat baggage are not required for the 14g vertical test. The ATDs identified in the § 25.562(c)(2) part of this test selection process should be instrumented to collect lumbar loads.

Step 5. Retention of a specific item of mass, including emergency equipment, need be demonstrated only once during the 14g vertical load condition, if suitable retention using the production means of attachment is shown by dynamic test. The item of mass may be restrained for all other 14g vertical tests.

Step 6. Include a representative floor in the test setup for the ATD's feet.

NOTE: Refer to paragraph a(1) above to address special design features (for example, unique energy-absorption features).

e. Injury Criteria (see §§ 25.562(c)(1) to (c)(6)). Injury criteria may be either measured during tests used to show compliance with other requirements or in dedicated tests, depending on the seat design and the practicality of acquiring the necessary data.

(1) Section 25.562(c)(1) - Upper torso restraint tension loads.

(a) The upper torso restraint tension loads must be collected during a structural test where the seat is yawed in the direction that produces the highest tension load in the restraint system. Typically this is the yaw direction that puts the upper torso restraint over the shoulder of the ATD which is moved further forward as a result of the yaw.

(b) If the 16g longitudinal test that demonstrates compliance with § 25.562(c)(7) is yawed in the appropriate direction, the restraint tension load data may be collected during this test, and an additional test is not required.

(c) If the 16g longitudinal test that demonstrates compliance with § 25.562(c)(7) is not yawed in the appropriate direction, an additional test must be added to the baseline testing. The test article for the additional test is the same seat selected for the 16g longitudinal test that demonstrates compliance with § 25.562(c)(7). It is yawed in the direction that creates the highest tension load in the restraint system, with the pitch and roll selected using the guidance in this AC.

(2).Section 25.562(c)(2) - Lumbar loads.

(a) The ATD lumbar loads must be collected during the 14g vertical test that demonstrates compliance with § 25.562(c)(7). An additional test for collecting lumbar loads is not required in the baseline testing (except as noted in paragraph (b)).

(b) ATDs instrumented to measure lumbar loads must be placed in seat places that represent the stiffest load path from the center of the occupant place to the structure and the least-stiff load path from the occupant place to the structure. This requirement will typically result in two instrumented ATDs, but will not exceed three instrumented ATD locations in a single test.

> **NOTE**: See paragraph a(1) to address special design features (for example, unique energy-absorption features) that may function differently, depending on seat occupancy.

If there is an item (for example IFE) or structure located at a specific seat place (typically beneath the seat pan) that may influence lumbar loads due to seat deflection and/or ATD contact, then lumbar loads must be addressed and substantiated for this location in addition to the locations identified above. These loads may be addressed and substantiated by either data showing no contact or an additional test(s) added to the baseline testing.

(3) Section 25.562(c)(3) - Upper torso restraint remains on shoulder.

(a) For seats with a single upper torso restraint (for example, a 3-point restraint), a test may be required which demonstrates that the upper torso restraint strap remains on the ATD's shoulder during impact with the seat yawed in the most critical direction. Typically, this is the yaw direction that puts the upper torso restraint over the shoulder of the ATD which is moved aft as a result of the yaw. (See Figure 5-3).

(b) If the 16g longitudinal test that demonstrates compliance with § 25.562(c)(7) is yawed in the appropriate direction so that the restraint is over the trailing shoulder, the restraint retention may be demonstrated during this test. An additional baseline test is not required.

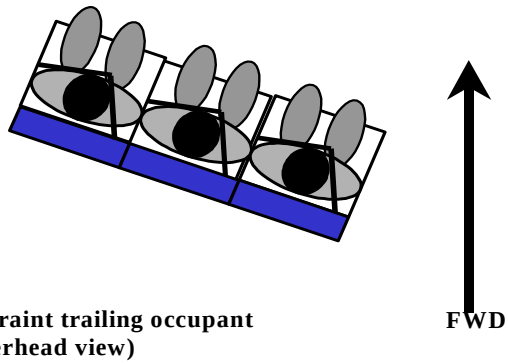

Figure 5-3. Restraint Trailing Occupant

(c) If the 16g longitudinal test that demonstrates compliance with § 25.562(c)(7) is not yawed in the appropriate direction and the criteria discussed in paragraph 3b(3) cannot be met, an additional test may be necessary. The test article for the additional test would be the same seat selected for the 16g longitudinal test. This demonstrates compliance with § 25.562(c)(7), yawed in the direction most critical for the restraint strap to remain on the ATD's shoulder and with the pitch and roll selected in accordance with the guidance in this AC.

(d) For seats with a dual upper torso restraint, the 16g longitudinal test that demonstrates compliance with § 25.562(c)(7) is acceptable for demonstrating that the upper torso restraint straps remain on the ATD's shoulder during impact. An additional baseline test is not required.

(e) High-speed test film or video of the test must be used to demonstrate that the upper torso restraint strap remains on the ATD's shoulder during the impact.

(4) Section 25.562(c)(4) - Lap belt remains on pelvis. It must be demonstrated that the pelvic restraint remains on the ATD pelvis during the deceleration pulse, including after ATD rebound. Verification that the belt is on the ATD pelvis post-test is sufficient to demonstrate compliance. High-speed cameras may be used to demonstrate compliance, if the lap belt angle is greater than 55 degrees or less than 45 degrees. Additional baseline tests are not required.

(5) Section 25.562(c)(5) - Head injury criterion (HIC). The HIC is applicable to all seats occupiable for takeoff and landing. Typically, seats located behind interior structure (front row seats) can be addressed in one test, since the potential contact surfaces tend to be homogeneous. Repetitive seat rows introduce more variables and typically require more than one test to demonstrate compliance.

(a) In an effort to reduce the regulatory burden and both simplify and clarify the procedure for demonstrating compliance, the procedure in Appendix 4 for row-to-row HIC has been developed. In the majority of cases, this procedure should allow demonstration of compliance for HIC with two tests. The procedure takes into account seat pitch, the relative position of the target seat and the occupied row behind it, and range of occupant sizes. The intent of this procedure is to provide default conditions that can be used in lieu of conducting several tests or performing lengthy analytical studies. The procedure is covered in detail in Appendix 4 but relies on two basic contact areas to assess HIC. These areas are the center of the seat back and the lateral edges of the seat back/armrest. For installations that incorporate airbags or upper torso restraints, a similar approach could be used provided that the applicant conducts a specific analysis for two basic contact areas to assess HIC. Specific attention should be given to the range of occupants required for airbags.

(b) Demonstration of compliance with the HIC should address seat pitch, occupant height (5th percentile female to the 95th percentile male), and yaw angle (up to ±10 degrees and any angle in between). The evaluation showing HIC of 1000 or less must be from an ATD head impact that is a solid strike and not a glancing blow. Dynamic tests are conducted with a 49 CFR part 572, Subpart B ATD (or equivalent) that is representative of a 50th percentile male occupant. For the purpose of addressing HIC for the height of a 95th percentile male occupant, 3 inches should be added to the ATD top of head when using rational analysis to select the critical HIC test to be conducted with a 49 CFR part 572, Subpart B ATD (or equivalent). This dimension should also be used to address the range of occupants when a test, or analysis based on test, at the installed pitch using a 49 CFR part 572, Subpart B ATD (or equivalent) results in a glancing blow. Once a seat back is qualified for HIC, any seat could be installed aft of it, provided the installation limitations result in comparable conditions to those under which the seat was tested.

(c) Compliance with the HIC is dependent on the details of the seat design as well as the installation. Variations between seats in the contact surfaces will require evaluation by test, unless it can be shown that one surface is more critical than the other. With respect to installation, there are several considerations:

- Seats on canted seat tracks such that the seats are parallel but at an angle with respect to the airplane longitudinal axis.
- Seats on staggered seat tracks such that the seat places row-to-row are staggered.
- Non-parallel seat rows.
- Staggered seating due to a change in the number of seat places.
- Different width seats that result in seat places row-to-row that are slightly staggered.

(d) Front row seats are those located directly aft of a partition, monument, or any other commodity certificated to 9g. Seats located directly aft of seat-related furniture such as consoles and walls of pod seats are not considered front row seats. For front row seats, simpler methods of compliance are possible. These methods specifically limit the range of occupant evaluation for HIC to that strictly covered by the test in § 25.562(b).

1 Perform dynamic testing as prescribed in § 25.562(b) with no head contact or HIC of 1000 or less. A glancing blow resulting in HIC of 1000 or less is acceptable and would not require additional analysis or testing using a more conservative test set up.

2 Perform a dynamic test as described in Appendix 4, paragraph 2, of this AC to determine the head path arc of the 49 CFR part 572, Subpart B ATD or equivalent and install the seat such that no contact by the ATD head would occur. In this case, we would not require more analyses or repositioning of the seat.

3 For seats that incorporate head path reducing features according to the note below, seats may be qualified without a head path test as follows: For seats typically identified as “economy” class seats during air carrier operations, place the seats 42 inches or more from the potential contact point. For all other “front row” seats (e.g., first or business class) the setback distance must be 45 inches or more. When using these dimensions, applicants should coordinate with the FAA or designee, as appropriate, and provide suitable justification for FAA evaluation. No dynamic test is needed for HIC or head path arc for seats that follow a design philosophy that includes the use of metallic components in the primary load path from the seat beams through the seat legs. The distance is measured from the cushion reference point to the vertical plane at the aft most potential contact point.

NOTE: The specific dimensions selected are based on data from certification programs using seats designed to be installed in the front row, i.e., “front row seats.” These seats are different from other seats in the airplane, in that in order to minimize head path, they incorporate stiffer structure, or low stretch seatbelts, or combinations of similar features. This makes a front row seat distinct from other seats. Thus, the validity of the 42"/45" criteria is based on the type of seats from which that criteria was derived. Using the same criteria for typical (non-front row) seats has not been validated and could result in these seats having head paths greater than the specified amount. This is contrary to the rule and policy. The intent of the allowance is to eliminate a test, but at the same time maintain the level of safety intended, had the test been conducted.

f. Deformation for Egress. The seat permanent deformations (see Appendix 2) must be measured in all structural tests. In addition, seat-back permanent deformations

must be measured in a test where the ATD's head contacts the seat back (for example, a row-to-row HIC test). All measured permanent deformations should be used to show compliance with § 25.562(c)(8). (However, deformations that occur as an artifact of test set-up orientation need not be considered.) Some of the seat permanent deformations will be evaluated for acceptability as part of the dynamic test results (seat pan rotation, 'B' vs. 'C'). Some of the seat permanent deformations will be used by the seat installer to evaluate the seat installation and airplane interior configuration (seat forward, aft, side deformations, seat back forward and aft deformations, and deployment of deployable items). The seat installer must use the measured seat permanent deformations to show an acceptable installation with regard to occupant egress of the airplane.

6. TEST FACILITIES.

a. General. There are a number of test facilities that can be used to accomplish dynamic testing. These are grouped into categories, based on the method used to generate the impact pulse (that is, accelerators, decelerators, or impact with rebound), and whether the facility is a horizontal (sled) design or a vertical (droptower) arrangement. Each facility type has characteristics that have advantages or disadvantages for the dynamic tests discussed in this AC. One particular concern with test facilities is the rapid sequence of acceleration and deceleration that takes place in tests. In an airplane crash, the acceleration phase is always gradual and usually well separated in time from the deceleration (crash) phase. In a test, the deceleration always closely follows the acceleration. When assessing the utility of a facility for the specific test procedures outlined in this AC, it is necessary to understand the possible consequences of this rapid sequence of acceleration and deceleration.

b. Deceleration Sled Facilities. In an airplane crash, the impact takes place as a deceleration, so loads are applied more naturally in test facilities that create the test impact pulse as a deceleration. Since it is simpler to design test facilities to extract energy in a controlled manner than to impart energy in a controlled manner, several different deceleration sled facilities can be found. The deceleration sled facility at the Federal Aviation Administration's Civil Aeromedical Institute (CAMI) was used in developing the test procedures discussed in this AC.

(1) The acceleration phase of the test, where sufficient velocity for the test impact pulse is acquired, can distort the test results if the acceleration is so high that the test articles or ATDs are moved from their intended pre-test position. This inability to control the initial conditions of the test would directly affect the test results. This can be avoided by using a lower acceleration for a relatively long duration and by providing a coast phase (in which the acceleration or deceleration is almost zero) prior to the impact. As a result, any dynamic oscillation in the test articles or the ATD which might be caused by the acceleration would decay.

(2) To guard against errors in data caused by pre-impact accelerations, data from the electronic test measurements (accelerations, loads) should be reviewed for the time period just before the test impact pulse to make sure all measurements are at the baseline (zero) level. Photometric film taken of the test should also be reviewed to make

certain that the ATDs used in the test and the test articles were all in their proper position prior to the test impact pulse.

(3) The horizontal test facility readily accommodates forward-facing seats in both tests discussed in this AC, but problems can exist in positioning the test ATDs in Test 1 if the seat is a rearward-facing or side-facing seat. In these cases, the ATDs tend to fall out of the seat due to the force of gravity and must be restrained in place using break-away tape, cords, or strings. Since each installation will present its own problems, there is no simple, generally applicable guidance for doing this. Attention should be given to positioning the ATD against the seat back and to proper positioning of the ATD's arms and legs. It will probably be necessary to build special supports for the break-away restraint, so that the supports will not interfere with the function of the seat and restraint system during the test. Film taken of the test should be reviewed to make sure that the break-away restraint did break (or become slack) in a manner that did not influence the motion of the ATD or the test articles during the test.

c. Acceleration Sled Facilities. Acceleration sled facilities, usually based on the Hydraulically controlled Gas Energized (HYGE) accelerator device, provide the impact test pulse as a controlled acceleration at the beginning of the test. The test item and the ATDs are installed facing in the opposite direction from the velocity vector (i.e., opposite from the direction used on a deceleration facility) to account for the change in direction of the impact. There should be no problem with the ATD or the test items being out of position due to pre-impact sled acceleration, since there is no sled movement prior to the impact test pulse.

(1) After the impact test pulse, when the sled is moving at the maximum test velocity, it must be safely brought to a stop. Most of the facilities of this design have limited track length available for deceleration, so that the deceleration levels can be relatively high and deceleration may begin immediately after the impact test pulse.

(2) Since the dynamic response of the system follows the impact test pulse in time, any sled deceleration that takes place during that response will affect the response and change the test results. The magnitude of change depends on the system being tested, so that no general "correction factor" can be specified. The effect can be minimized if the sled is allowed to coast without significant deceleration until the response is complete.

(3) If the seat or restraint system experiences a structural failure during the test pulse, the post-impact deceleration can increase the damage and perhaps result in failures of unrelated components. This will complicate the determination of the initial failure mode and make product improvement more difficult.

(4) One other consideration is that the photometric film coverage of the response to impact test pulse must be accomplished when the sled is moving at near maximum velocity. On-board cameras or a series of track-side cameras are usually used to provide film coverage of the test. Since on-board cameras frequently use a wide angle lens placed close to the test items, it is necessary to account for the effects of distortion and parallax when analyzing the film.

(5) The acceleration sled facility faces the same problems in accommodating rearward facing or side-facing seats in Test 1 as the deceleration sled facility, and the corrective action is the same for both facilities.

d. Impact-with-rebound Sled Facilities. One other type of horizontal test facility used is the "impact-with-rebound" sled facility. On this facility, the impact takes place as the moving sled contacts a braking system which stores the energy of the impact and then returns the stored energy back to the sled, causing it to rebound in the opposite direction. This facility has the advantage over acceleration or deceleration facilities in that only one half of the required velocity for the impact would need to be generated by the facility (assuming 100 percent efficiency). Thus, the track length can be shortened, and the method of generating velocity is simplified. The disadvantages of this facility combine the problems mentioned above for both acceleration facilities and deceleration facilities. Since one of the reasons for this type of facility is to allow short track length to be used, it may be difficult to obtain sufficiently low acceleration just before or after the impact pulse to resolve data error problems caused by significant pre-impact and post-impact accelerations.

e. Drop Towers. Vertical test facilities can include both drop towers (decelerators) and vertical accelerators. Vertical accelerators that can produce the long duration/displacement impact pulse depicted in Figure 3-1 have not been generally available. However, drop towers are one of the easiest facilities to build and operate and are frequently used. In these facilities, the pull of earth's gravity is used to accelerate the sled to impact velocity so that the need for a complex mechanical accelerating system is eliminated. Unfortunately, these facilities are difficult to use for conducting Test 2, particularly for typical forward-facing seats. In preparing for this test, the seat must be installed at an angle such that the ATD tends to fall from the seat due to gravity. The restraint system being tested cannot hold the ATD against the seat unless tightened excessively and will not usually locate the head, arms, or legs in their proper position relative to the seat. Design and fabrication of an auxiliary "break-away" ATD positioning restraint system just for this test is a complex task. The auxiliary restraint must not only position the ATD against the seat (including maintaining proper seat cushion deflection) during the pre-release condition of 1g, but must also maintain the ATD in that proper position during the free fall to impact velocity when the system is exposed to 0g. It must then release the ATD in a manner that does not interfere with the ATD response to impact. The usual sequence of 1g/0g impact—without the possibility of a useful "coast" phase as done in horizontal facilities—causes shifts in initial conditions for the test impact pulse that can affect the response to the impact. The significance of this will depend on the dynamic characteristics of the system being tested, and these are seldom known with sufficient accuracy to enable the response to be corrected. In addition, the earth's gravity will oppose the final rebound of the ATDs into the seat back, so that an adequate test of seat back strength and support for the ATD cannot be obtained. The problems in Test 1 or with rear-facing seats in Test 2 are not as difficult because the seat will support the ATD occupant prior to the free fall. However, the 0g condition that exists prior to impact will allow the ATD to "float" in the seat restraint system, perhaps changing position and certainly changing the initial impact conditions. Again, use of an auxiliary break-away restraint system to correct these problems is difficult.

7. ANTHROPOMORPHIC TEST DEVICES.

a. General. The tests discussed in this AC were developed using modified forms of the ATDs specified by the United States Code of Federal Regulations, Title 49, Part 572 Anthropomorphic Test Dummies, Subpart B – 50th Percentile Male (known as the Hybrid II). These "Part 572B" ATDs have been shown to be reliable test devices that are capable of providing reproducible results in repeated testing. However, since ATD development is a continuing process, provision was made for using "equivalent" ATDs. Instrumented ATD types should not be mixed when completing the tests discussed in this AC. Any approved ATD type can be used when occupying the seat as ballast

b. Modification to Measure Pelvic/Lumbar Load.

(1) To measure the axial compressive load between the pelvis and lumbar column due to vertical impact as well as downward loads caused by upper torso restraints, a load (force) transducer is inserted into the ATD pelvis just below the lumbar column. There is a load cell available for this purpose that does not require major alteration to the ATD. The general installation is shown schematically in Figure 7-1.

(2) ATDs modified per prior methods involving installation of a femur load cell, described in previous versions of this AC, continue to be acceptable for use.

(3) Alternative approaches to measuring the axial force transmitted to the lumbar spinal column by the pelvis are acceptable if the method:

(a) Accurately measures the axial force but is insensitive to moments and forces other than that being measured;

(b) Maintains the intended alignment of the spinal column and the pelvis, the correct seated height, and the correct weight distribution of the ATD; and

(c) Does not alter the other performance characteristics of the ATD.

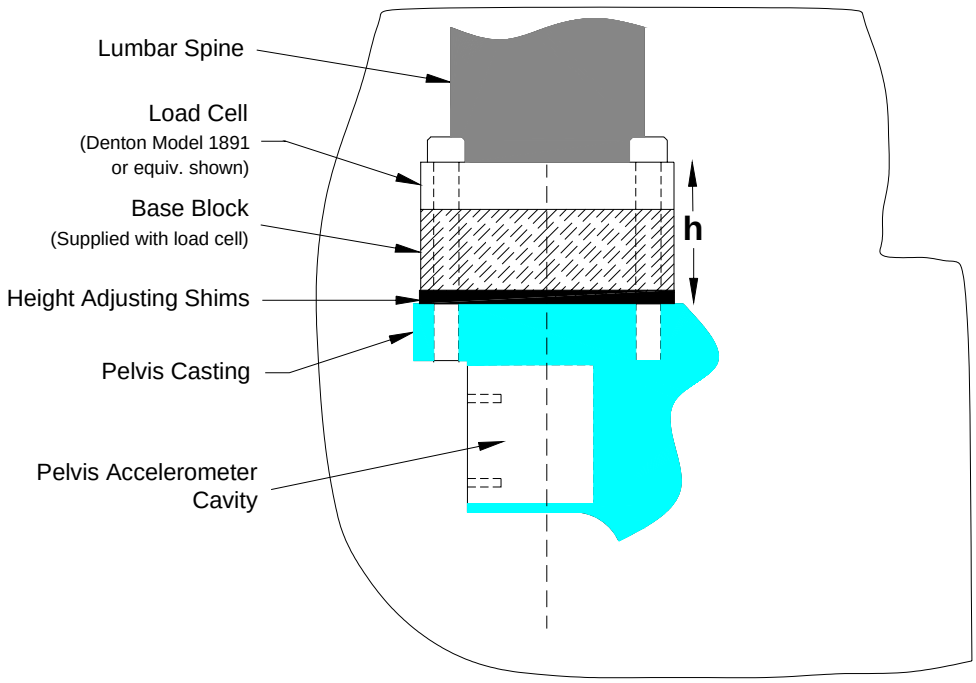

Figure 7-1
Installation of Pelvic-Lumbar Load Cell
in Part 572B ATD

c. Other ATD Modifications.

(1) To prevent failure of the clavicle used in Part 572 Subpart B ATDs due to flailing, a clavicle of the same shape but of higher strength material can be substituted.

(2) Submarining indicators, such as electronic transducers, may be added on the ATD pelvis. These are located on the anterior surface of the ilium of the ATD pelvis without altering its contour, and indicate the position of the pelvic restraint as it applies loads to the pelvis. These indicators provide a direct record that the pelvic restraint remains on the pelvis during the test and eliminate the need for careful review of high-speed camera images to make that determination.

d. Equivalent ATDs. The continuing development of ATDs for dynamic testing of seating restraint/crash-injury-protection systems is guided by goals of improved biofidelity (human-like response to the impact environment) and reproducibility of test results. A procedure to enable the use of a modified 49 CFR part 572, Subpart E (the Hybrid III) ATD has been developed and is documented in the Society of Automotive Engineers (SAE) Technical Paper 1999-01-1609. The significant differences from a certification standpoint are in the lumbar spine region. In addition, there are some mass distribution adjustments that are necessary. The Hybrid III has a higher degree of biofidelity, and other enhancements as compared to the Hybrid II. Alternatively, ATDs can be considered the equivalent of the Part 572B ATD if:

(1) They are fabricated in accordance with design and production specifications established and published by a regulatory agency that is responsible for crash injury protection systems;

(2) They are capable of providing data for the measurements discussed in this AC or of being readily altered to provide the data;

(3) They have been evaluated by comparison with the Part 572B ATD and are shown to generate similar response to the impact environment discussed in this AC; and

(4) Any deviations from the Part 572B ATD configuration or performance are representative of the occupant of a civil airplane in the impact environment discussed in this AC.

8. INSTRUMENTATION.

a. General.

(1) Electronic and photographic instrumentation systems must be used to record data for qualification of seats. Electronic instrumentation should measure the test environment and measure and record data required for comparison of performance to pass/fail criteria.

(2) Photographic instrumentation should be used to document the overall results of tests. Photographic instrumentation should also be used to confirm that the pelvic restraint remains on the ATD's pelvis and that the upper torso restraint straps remain on the ATD's shoulder during impact. The photographs should also document that the seat does not deform as a result of the test in a manner that would impede rapid evacuation of the airplane by the occupants and that the seat remains attached at all points of attachment. For passenger seats with lap belt angles of between 45 and 55 degrees, submarining is typically not a problem. For this reason, a second camera (for example, an overhead camera) for evaluation of submarining is not necessary.

b. Electronic Instrumentation. Electronic instrumentation should be accomplished in accordance with the Society of Automotive Engineers Recommended Practice SAE J211, "Instrumentation for Impact Tests," using the sign convention of SAE J1733 "Sign Convention for Vehicle Crash Testing." In this practice, a data channel is considered to include all of the instrumentation components from the transducer through the final data measurement, including connecting cables and any analytical procedures that could alter the magnitude or frequency content of the data. Each dynamic data channel is assigned a nominal channel class that is equivalent to the high frequency limit for that channel, based on a constant output/input ratio versus frequency response plot which begins at 0.1 Hz (+1/2 to -1/2 dB) and extends to the high frequency limit (+1/2 to -1 dB). Frequency response characteristics beyond this high frequency limit are also specified. When digitizing data, the sample rate should be at least five times the 3 dB cutoff frequency of the presample analog filters. Since most facilities set all presample analog filters for Channel Class 1000, and since the 3 dB cutoff frequency for channel class 1000 is 1650 Hz, the minimum digital sampling rate would be about 8000 samples per second. For the dynamic tests discussed in this AC, the dynamic data channels must comply with the following channel class characteristics:

(1) Sled or drop tower vehicle acceleration is measured in accordance with the requirements of Channel Class 60.

(2) Belt-restraint system and seat attachment reaction loads (when measured) are measured in accordance with the requirements of Channel Class 60. Loads in restraint systems that attach directly to the test fixture can be measured by three-axis load cells fixed to the test fixture at the appropriate location. These commercially available load cells measure the forces in three orthogonal directions simultaneously, so that the direction as well as the magnitude of the force can be determined. If desired, similar load cells can be used to measure forces at other boundaries between the test fixture and the test item, such as the forces transmitted by the legs of the seat into the floor track. It is possible to use independent, single axis load cells arranged to provide similar data, but care should be taken to use load cells that can withstand significant cross axis loading or bending without causing errors in the test data.

(3) ATD head accelerations used for calculating the Head Injury Criterion (HIC) are measured in accordance with the requirements of Channel Class 1000.

(4) ATD femur forces are measured in accordance with Channel Class 600.

(5) ATD pelvic/lumbar column force is measured in accordance with the requirements of Channel Class 600.

(6) The full-scale calibration range for each channel provides sufficient dynamic range for the data being measured.

(7) Digital conversion of analog data provides sample resolution of not less than 1 percent of full-scale input.

c. Photographic Instrumentation. Photographic instrumentation is used for documenting the response of the ATDs and the test items to the dynamic test environment. Both high-speed and still image systems should be used.

(1) Photographic instrumentation is in accordance with SAE J211, Part 2. High-speed cameras that provide data used to calculate displacement or velocity should operate at a minimum nominal speed of 500 frames per second. Photo instrumentation methods should not be used for measurement of acceleration. The locations of the camera and targets or targeted measuring points within the field of view should be measured and documented. Targets should be at least 1/100 of the field width covered by the camera and should be of contrasting colors or should contrast with their background. The center of the target should be easily discernible. A description of photographic calibration boards or scales within the camera field of view; the camera lens focal length; and the make, model and serial number of each camera and lens should be documented for each test. Appropriate digital or serial timing should be provided on the image media. A description of the timing signal, the offset of the timing signal to the image, and the means of correlating the time of the image with the time of the electronic data should be provided.

(2) Rectilinearity of the image is documented in accordance with SAE J211, Part 2. If the image is not rectilinear, as indicated by an overall error in excess of 1 percent, appropriate correction factors should be used in the data analysis process. A rigorous, verified analytical procedure should be used for data analysis. The accuracy of the procedure is considered adequate, if the difference between the measured and derived distance separating the Validation Target Pair, as defined in SAE J211, Part 2, is not greater than 1.0 cm (0.4 inches).

(3) Cameras operating at a nominal rate of 200 frames per second or greater may be used to document the response of ATDs and test items, if measurements are not required. For example, actions such as movement of the pelvic restraint system webbing off of the ATD's pelvis can be observed by documentation cameras placed to obtain a “best view” of the anticipated event. These cameras should be provided with appropriate timing and a means of correlating the image with the time of electronic data.

(4) Still image cameras should be used to document the pre-test installation and the post-test response of the ATDs and the test items. At least four pictures should be obtained from different positions around the test items in pre-test and post-test conditions. Where an upper torso restraint system is installed, post-test pictures must be obtained before moving the ATD. For additional post-test pictures, the ATD's upper torso may be rotated to its approximate upright seated position, so that the condition of the restraint systems may be better documented, but no other change to the post-test response of the test item or the ATD should be made. The pictures should document whether the seat remained attached at all points of attachment to the test fixture.

(5) Still pictures may also be used to document post-test yielding of the seat for the purpose of showing that it would not impede the rapid evacuation of the aircraft occupants. The ATD should be removed from the seat in preparation for still pictures used for that purpose. Targets or an appropriate target grid should be included in such pictures, and the views should be selected so that potential interference with the evacuation process can be determined. For tests where the ATD's head impacts a fixture or another seat back, pictures shall be taken to document the head contact areas.

9. TEST FIXTURES.

a. General. A test fixture is required to position the test article on the sled or drop carriage of the test facility and takes the place of the airplane's floor structure. It does not need to simulate the airplane floor flexibility. It holds the attachment fittings or floor tracks for the seat and provides the floor deformation if needed for the test; it provides anchorage points if necessary for the restraint system; it provides a floor or footrest for the ATD; and it positions instrument panels, bulkheads, or a second row of seats, if required.

b. Floor Deformation.

(1) Purpose of floor deformation. The purpose of providing floor deformation for the longitudinal tests is to demonstrate that the seat system will remain attached and perform properly, even though the seat or airframe may be deformed by the forces associated with the crash. Floor deformation is not required for demonstrating compliance with injury criteria.

(2) Floor deformation fixture. For the typical seat with four seat legs mounted in the aircraft on two parallel tracks, the floor deformation test fixture should consist of two parallel beams: a pitch beam that pivots about a lateral (y) axis and a roll beam that pivots about a longitudinal (x) axis (see Figure 9-1 for a schematic representation). The beams can be made of any rigid structural form: box, I-beam, channel, or other appropriate cross section. The pitch beam should be capable of rotating in the x-z plane up to ±10 degrees relative to the longitudinal (x) axis. The roll beam should be capable of ±10 degrees roll about the centerline of floor tracks or fittings. A means should be provided to fasten the beams in the deformed positions.

The beams should have provision for installing a floor track or other attachment fittings on their upper surface in a manner that does not alter the above-floor strength of the track or fitting. The track or other attachment fittings must be representative in above-floor configuration and in the strength used in the airplane. Structural elements below the surface of the floor that are not considered part of the floor track or seat attach fitting need not be included in the installation. Appropriate safety precautions should be taken while imposing floor deformations.

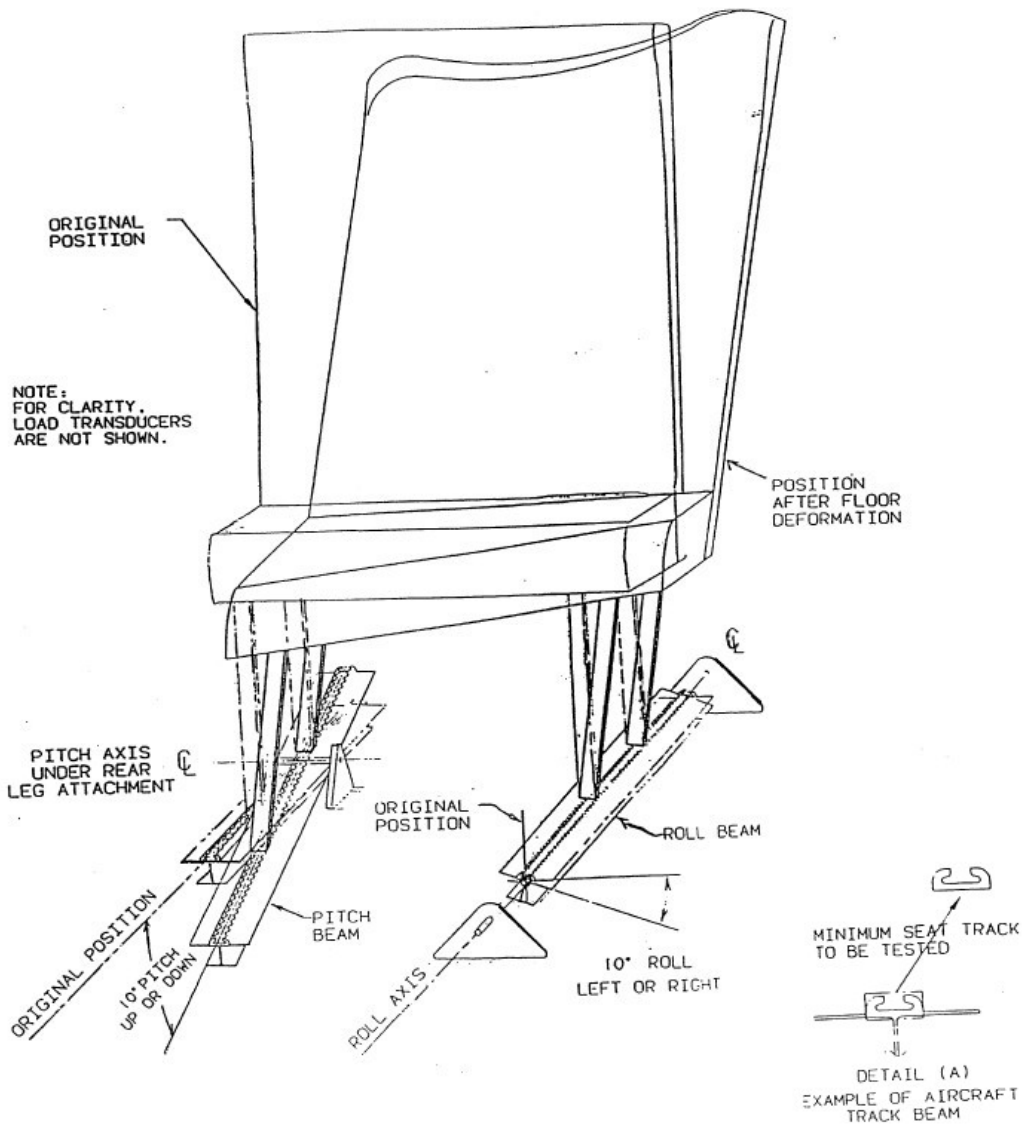

Figure 9-1. Schematic Floor Deformation Fixture—
Seat Legs Attached at Floor Level

(3) Airplane floor track or attachment fitting simulation. An example of the minimum required representation of a floor track is shown in Detail A of Figure 9-1 for one type of seat track. The track or other attachment fittings must be representative of those used in the airplane. Alternatively, three components of reaction forces and three components of reaction moments may be measured during dynamic tests. These six components may be applied simultaneously, by a separate static or dynamic test to a track or attachment fitting used on an airplane, or to a more critical track or attachment fitting than that used on an airplane to demonstrate that the loads measured in the dynamic impact test will not fail the track or attachment fitting used on an airplane.

(4) Load transducer installation (optional). The pitch and roll beams should have provisions for installing individual load transducers at each seat leg attachment point capable of measuring three reaction forces and, if necessary, three reaction moments (see paragraph 7b(3)). The load transducers should have provisions to install floor track or other attachment fittings on their upper surface in a manner that does not alter the above-floor strength of the track or fitting.

c. Other Mounting Configuration Constraints. The preceding discussion describes the fixture and floor deformation procedure that would be used for a typical seat that uses four seat legs and four attachments to the aircraft floor. These test procedures are not intended to be restricted only to those seat configurations, but can be adapted to seats having other designs. Special test fixtures may be necessary for those different configurations. The following methods, while not covering all possible seat designs, should be followed for the more common alternatives:

(1) Airplane seats with three legs may have one central leg at the front or back of the seat and one leg on each side of the seat. The central leg is held in its undeformed position as deformation is applied to the side legs.

(2) Seats that have more than two pairs of legs should be tested with the floor warpage condition that results in the most critically stressed condition. This typically involves warping adjacent pairs of legs. Seats that employ several pairs of legs, ganged together by common cross tubes, can be distorted so that the critical pair of legs is rolled, while the remaining legs on one side of the critical leg are pitched in unison. The legs that are pitched should be selected to increase the load on the critical leg and stress the floor or track fitting in the most severe manner (see Figures 9-2 and 9-3).

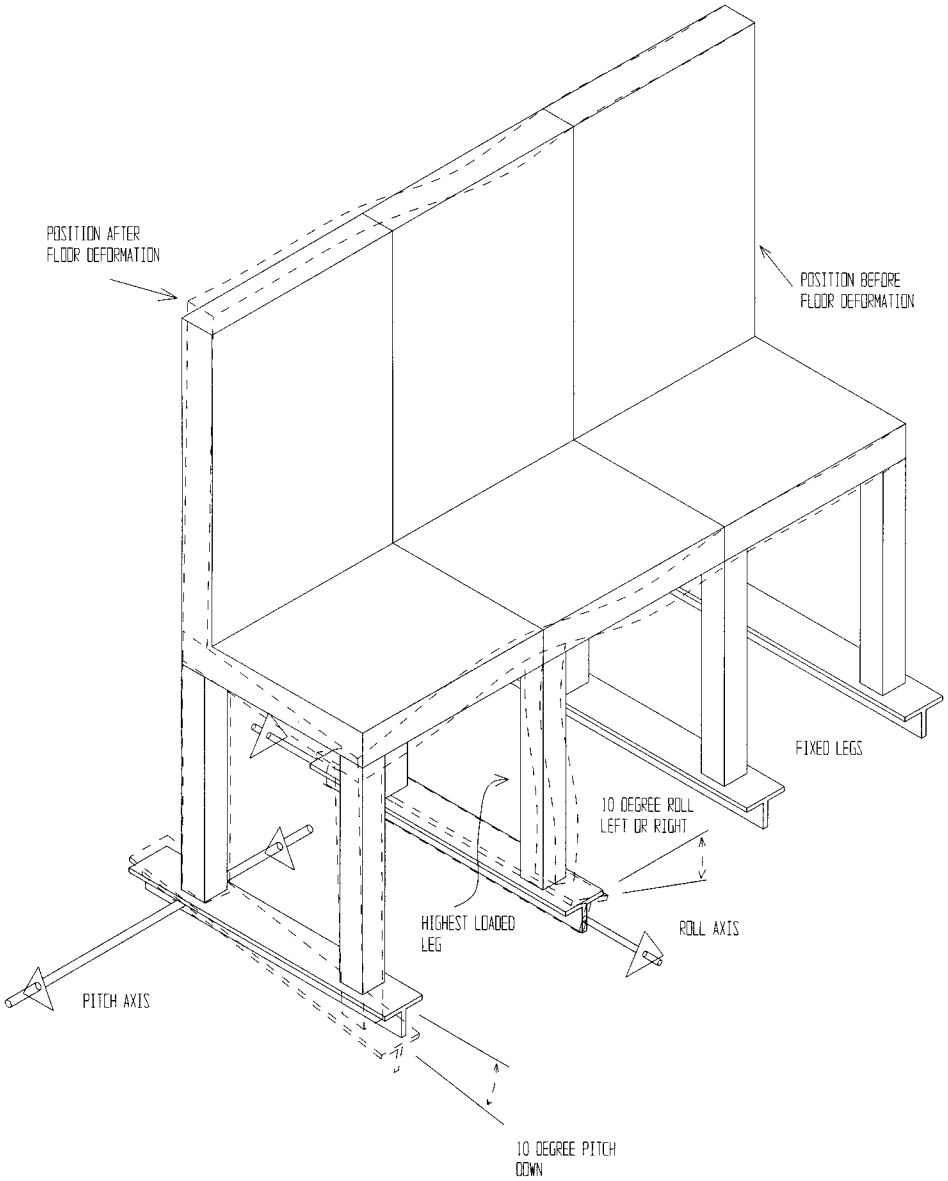

Figure 9-2. Floor Warpage Multiple Leg Seat

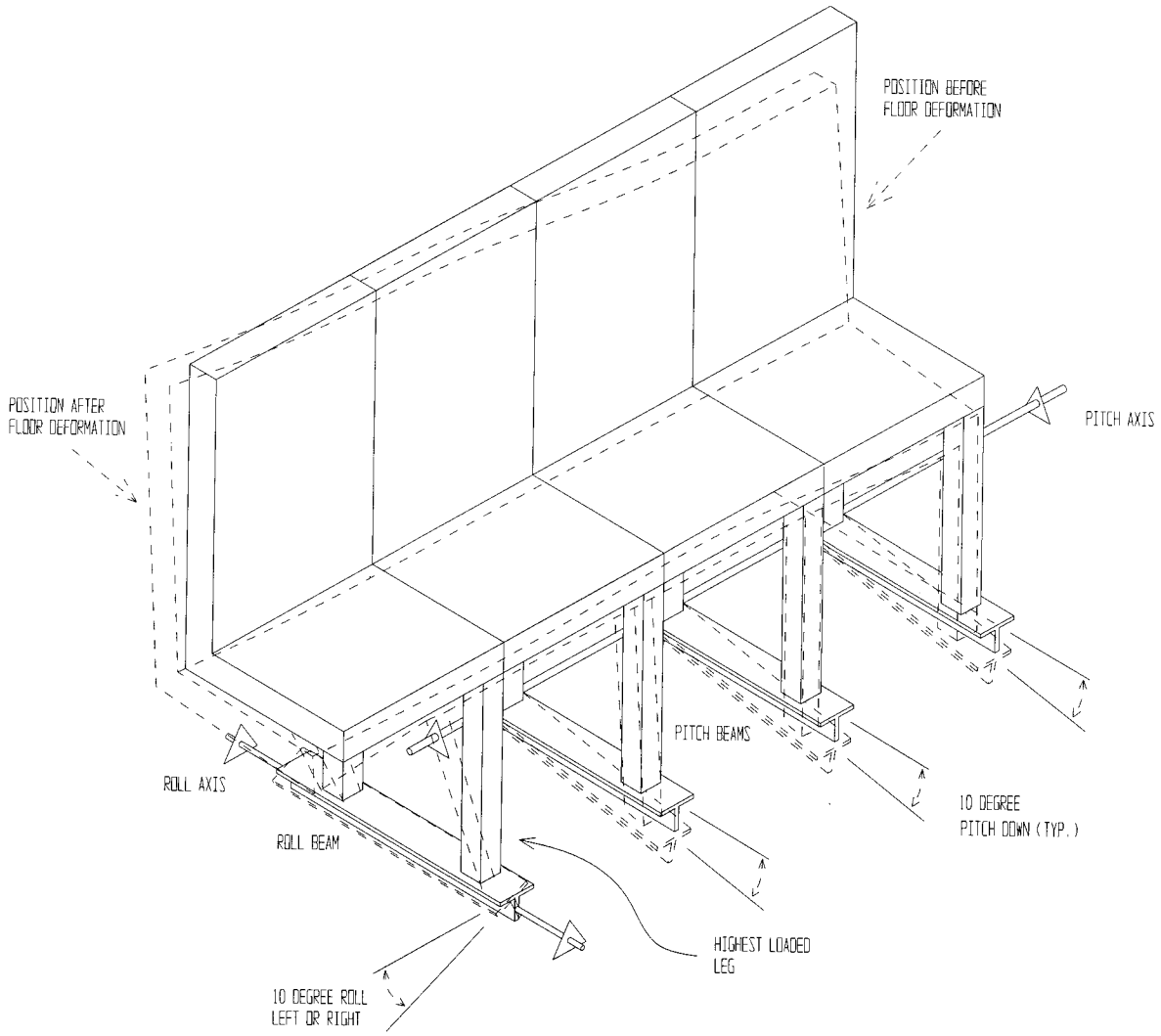

Figure 9-3. Floor Warpage Multiple Leg Seat

(3) Seats that are wall-mounted must be evaluated individually. There are several types of mounting schemes, some of which are discussed below. As noted in the preamble to Amendment 25-64, the dynamic impact pulses defined in § 25.562 are considered compatible with existing airframe structure. The definition of the test fixture required for floor-mounted seats takes this into account, so that extensive floor structure is not necessary for test; that is, only the seat track above the floor is used. The important consideration is the retention of the seat under dynamic conditions, and the test setup should account for this in wall-mounted seats as well. The following guidance has been established with this objective in mind.

(a) Seats that are mounted to primary airplane structure, such as a pressure bulkhead, need only be tested with the attachment fitting mounted to rigid structure in a manner equivalent to the production installation.

(b) Seats mounted to a structure, such as a structural bulkhead, galley or lavatory, where no integral structural members are used for attachment should be tested with the seat attached to segments of the mounting surface. These segments are typically eight inch by eight inch sections of the panel. These sections can, in turn, be mounted to a rigid structure.

(c) Seats that are mounted to single panel furnishings, such as class dividers or windscreens, where the panel essentially fulfills the role of the legs should be treated the same as floor mounted seats. For the purpose of conducting tests, the entire assembly, including the panel and its attachments, should be included in the test setup. In this case, floor warpage should be applied to track-mounted furnishings.

(4) Seats that are attached to both the floor and a bulkhead should be tested on a fixture that positions the bulkhead surface in a plane through the axis of rotation of the pitch beam. The bulkhead surface should be located perpendicular to the plane of the floor (the airplane floor surface, if one were present) in the undeformed condition or in a manner appropriate to the intended installation. Either a rigid bulkhead simulation or an actual bulkhead panel can be used. If a test fixture with a rigid bulkhead simulation is used, the seat restraint system is attached to fittings installed in a test panel equivalent to those used in the actual installation. The seat is attached to the bulkhead and the floor in a manner representative of the airplane installation, and the floor shall then be deformed as described in paragraph 9b.

(5) Seats that incorporate attachment to the aircraft sidewall must be evaluated taking into consideration the expected aircraft fuselage cross-section deformation during a crash. The seat could be mounted between sidewalls or to the sidewall and the floor. The test fixture will allow either a pitch beam or a roll beam to be installed at the outboard attachment structure of the seat. The seat positioning pins or locks are fastened in the same manner as used in the aircraft, including the adjustment of anti-rattle mechanisms, if provided. The following two seat attachment cases incorporating sidewall attachment will be considered:

(a) For the case where there are both sidewall and inboard floor attachments, two tests may be required.

1 To substantiate the seat and sidewall attachment structure, the roll beam is installed on the sidewall attachment and the pitch beam is installed on the inboard floor location as shown in Figure 9-4. The test is conducted with the roll beam rotated simulating the sidewall rotating outboard. The pitch beam rotation and the yaw angle direction of the seat are selected to produce the critical loading condition for the sidewall attachment structure.

2 To substantiate the seat and inboard floor attachment structure, the roll beam is installed on the inboard floor attachment and the pitch beam supports the sidewall attachment. The pitch and roll directions of the test fixture and the yaw direction of the seat are selected fixture and the yaw direction of the seat are selected to produce the critical loading condition for the inboard attachment structure.

Both tests are required, unless it is shown by rational analysis that testing one attachment structure in its critical condition substantiates the other attachment structure.

(b) For the case where the seat is mounted between aircraft sidewalls with no floor attachment structure, the roll beam is installed at the critical outboard attachment structure, while the pitch beam is located at the other outboard attachment structure. The test is conducted with the roll beam rotated simulating the sidewall rotating outboard. The pitch beam rotation and the yaw angle of the seat are selected to produce the critical loading condition for the outboard attachment structure.

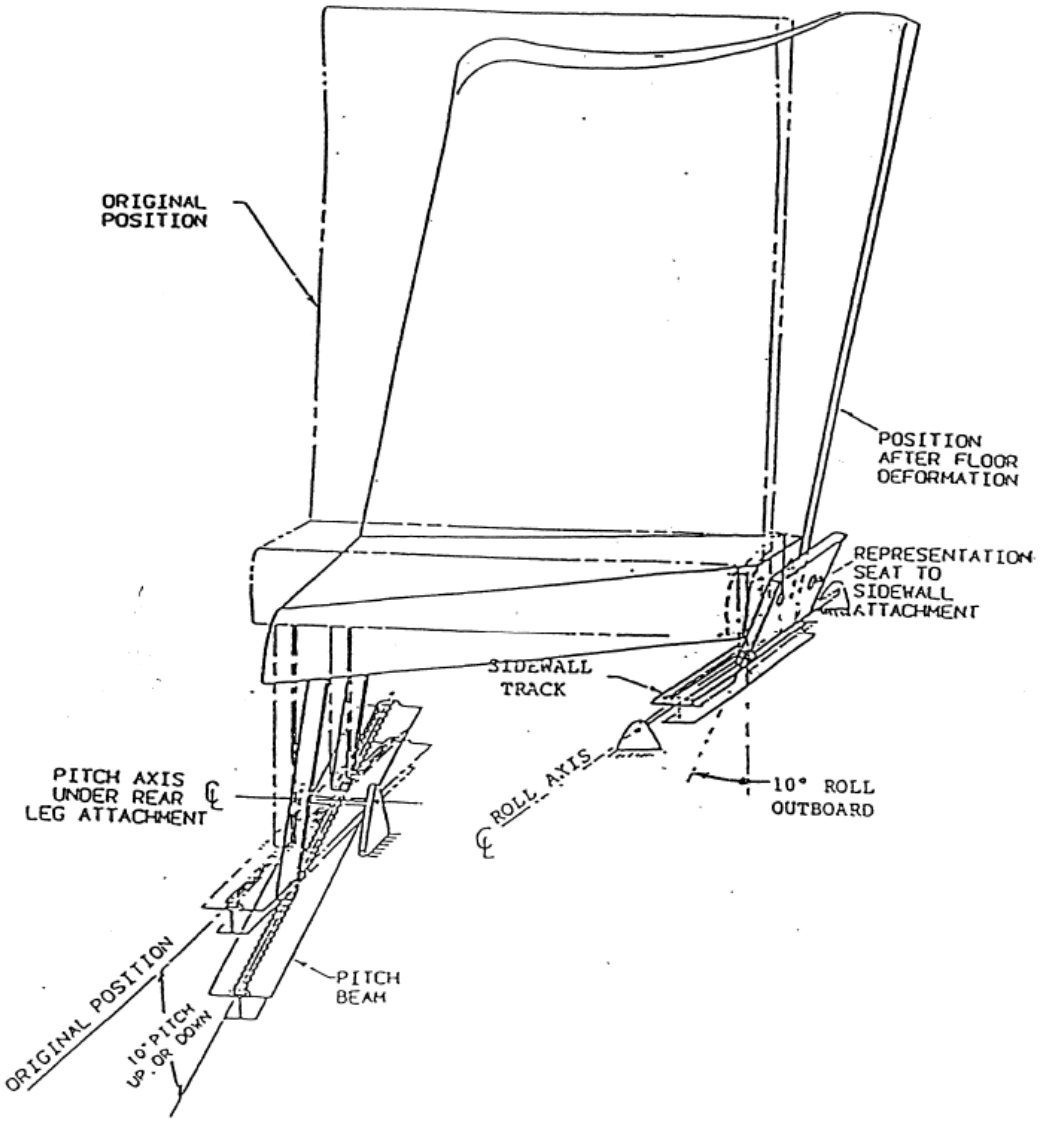

Figure 9-4
Schematic Floor Deformation Fixture—
Seat Legs Attached at Side Wall

(6) Seats that are mounted between interior furnishings. Seats that are mounted between two interior furnishings, such as an observer seat or a flight attendant seat mounted between interior walls, should be tested with deformation in plane as shown in Figure 9-5. Deformation is applied so that the critical attachment is first raised, resulting in vertical displacement of 5 degrees from one side of the seat to the other, and is then rolled outboard 5 degrees.

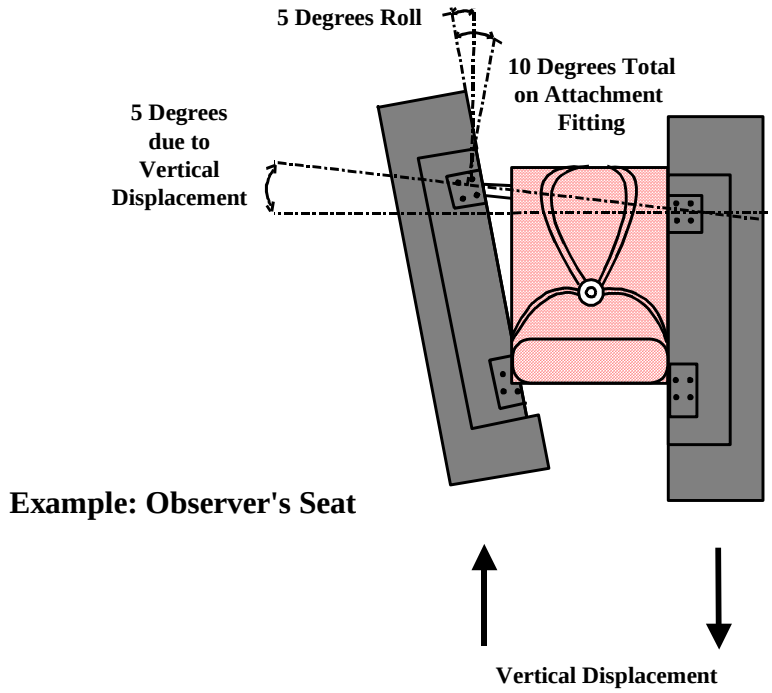

Figure 9-5
Seats Mounted in an Aisle

(7) Seats that are cantilevered from one sidewall without connection to other structure are not subject to floor deformation. A determination must be made whether sidewall deformations could be expected that could generate a condition critical for seat performance in a crash. If sidewall deformation is likely, the entire sidewall attachment plane or the attachment points is deformed in a manner to represent the sidewall deformation. Either a rigid sidewall simulation or an actual sidewall panel may be used. If a test fixture with a rigid sidewall simulation is used, the seat/restraint system is attached to fittings installed in a test panel equivalent to those used in the actual installation.

(8) Seats that are mounted on adapter plates (plinth). Where the adapter (plinth) is used to mount a single seat assembly (whether single or multiple place), and the adapter plate is attached to the floor, the adapter plate is considered as part of the seat assembly and should be deformed as described in paragraph 9b. Any items of mass attached to the plinth need to be represented and included in the dynamic testing, as discussed in Appendix 5 of this AC.

(9) Seats that are mounted on a pallet (for example, multiple seat rows). A pallet is considered part of the floor structure of the airplane based on its size, structural design, and redundancy of attachment. The seats should be attached to the test fixture in

a manner representative of the airplane installation. The seat legs are deformed as described in paragraph 9b. Any items of mass attached to the pallet and not part of the seat structure do not need to be included in the dynamic testing.

d. Side-facing Seats.

(1) General. All seats occupiable for takeoff and landing are subject to the specified dynamic test conditions. Included are side-facing seats and both single occupancy and multiple place seats, such as divans. Compliance with the structural requirements should be demonstrated for side-facing seats, using the same conditions for the test and pass/fail criteria as for fore- and aft-facing seats. The seat should be loaded in the most critical case structurally. Means of restraining the ATDs may need to be adapted to ensure adequate retention during the test. The application of floor distortion will need to be assessed on an individual basis, depending on the design of the fixation of the seat. The injury criteria of § 25.562 are not adequate to demonstrate equivalent safety of side-facing seats when compared to fore- and aft-facing seats. To demonstrate equivalent safety fully in the absence of such specified criteria, the applicant must use other injury criteria which may be derived from the automotive industry, which uses side-impact ATDs.

(2) Assessment criteria. Research into side-facing seats is ongoing. As research proceeds, the FAA will work toward establishing a more definitive policy with respect to the acceptance of side-facing seats. Until then, in the absence of specific compliance guidance, the FAA is prepared to assess side-facing seats on the following basis:

(a) The seat must demonstrate compliance with the structural requirement.

(b) If an acceptable side impact ATD has not been used with assessment of the corresponding injury criteria, it must be shown that the occupants are restrained in a manner that prevents substantial energy absorption by body to body contact (on a multiple occupancy seat) and which, using the best available engineering judgment, minimizes injury to the occupant(s).

e. Multiple Row Test Fixtures. In tests of passenger seats that are normally installed in repetitive rows in the airplane, head and knee impact conditions are best evaluated through tests that use at least two rows of seats. These conditions are usually critical only in Test 2. This test allows direct measurements of the head and femur injury data.

(1) The fixture must be capable of setting the airplane longitudinal axis at a yaw angle of -10 to +10 degrees. The fixture should also allow adjustment of the seat pitch and installation angle with respect to the airplane center line.

(2) To allow direct measurement of head acceleration for the head injury assessment of a seat installation where the head of the occupant is within striking distance

of structure, a representative impact surface may be attached to the test fixture in front of the seat at the orientation and distance from the seat representing the airplane installation.

f. Other Fixture Applications. Test fixtures should provide a flat footrest for ATDs used in tests of passenger seats and crewmember seats that are not provided with special footrests or foot-operated airplane controls. The surface of the footrest must be at a position representative of the floor in the airplane installation. Test fixtures used for evaluating crew seats that are normally associated with special footrests or foot-operated controls must simulate those components. (A footrest is optional for Test 2 structural tests—see paragraph 10f.) Test fixtures may also require guides or anchors for restraint systems or for holding instrument panels or bulkheads. If these provisions are required, the installation must represent the configuration of the airplane installation and be of adequate structural strength. The strength of any such restraint anchorages should be equivalent to the actual installation, whereas instrument panels or bulkheads should be sufficiently strong to ensure that they withstand the test pulse.

10. TEST PREPARATION.

a. Preparation for the Tests will involve positioning and securing the ATD, the ATD restraint system, the seat, and the instrumentation. This is done for the specific critical condition being tested. Preparations that pertain to the normal operation of the test facility, such as safety provisions and the actual procedures for accomplishment of the tests, are specific to the test facility and are not addressed in this AC.

b. Use of Anthropomorphic Dummies. Anthropomorphic dummies used in the tests discussed in this AC should be maintained to perform in accordance with the requirements described in their specification. Periodic teardown and inspection of the ATD should be accomplished to identify and correct any worn or damaged components, and appropriate ATD calibration tests (as described in their specification) should be accomplished if major components are replaced. For the tests discussed in this AC, the following procedures have been found to be adequate:

(1) Since extremes of temperature and humidity can affect ATD performance, the ATDs should be maintained at a temperature range between 66 to 78 degrees F (19 to 26 degrees C) and at a relative humidity from 10 to 70 percent for a minimum of 4 hours prior to the test.

(2) Each ATD should be clothed in form-fitting cotton stretch garments with short sleeves, mid-calf length pants, and shoes (size 11E) weighing about 2.5 pounds. The color of the clothing should be in contrast to the color of the restraint system.

(3) For tests where the ATD's head is expected to impact a fixture or another seat back, the head and face of the ATD may be treated with a suitable material to mark head contact areas. The material used must not reduce the resulting HIC values.

(4) The friction in limb joints should be set so that they barely restrain the weight of the limb when extended horizontally.

(5) The ATD should be placed in the center of the seat in as nearly a symmetrical position as possible. The ATD should be placed in the seat in a uniform manner so as to obtain reproducible test results.

(6) The ATD's back should be against the seatback without clearance. This condition can be achieved, if the ATD's legs are lifted as it is lowered into the seat. Then the ATD is pushed back into the seatback as it is lowered the last few inches into the seat pan. Once all lifting devices have been removed from the ATD, the ATD should be "rocked" slightly to settle it in the seat.

(7) The ATD's knees should be separated about four inches.

(8) The ATD's hands should be placed on the top of its upper legs, just behind the knees. If tests on crew seats are conducted in a mockup that has airplane controls, the ATD's hands should be lightly tied to the controls. The ATD arms should be positioned such that they are not over the armrests, so as not to bear on the armrests and influence the collection of lumbar loads during the down test.

(9) The feet should be in the appropriate position for the type of seat tested (flat on the floor for a passenger seat, on control pedals or on a 45-degree footrest for flightcrew systems). The feet should be placed so that the centerlines of the lower legs are approximately parallel, unless the need for placing the feet on airplane controls dictates otherwise.

(10) If the system is tested in other than a "horizontal floor" position, it is recommended that the ATD be placed such that the hip joints are in essentially the same position relative to the seat as when seated with a 1g pre-load as shown in Figures 10-1 and 10-2. Achieving this position may require that the lap belt be very tight and a shim be placed behind the ATD's back and pelvis.

(11) Auxiliary restraints may be required to ensure that each ATD will be in its proper position prior to the impact. The auxiliary restraint(s) must not interfere with the results of the test.

c. Seat Adjustment. Except as noted in paragraph 3b(4), to the extent that they influence the injury criteria, all seat adjustments and controls should be in the design position intended for the 50th percentile male occupant. If the seat restraint systems being tested are to be used in applications where special requirements dictate their position for landing or takeoff, those positions should be used in the tests.

d. Installation of Instrumentation. Professional practice should be followed when installing instrumentation. Care should be taken when installing the transducers to prevent deformation of the transducer body that could cause errors in data. Lead-wires should be routed to avoid entanglement with the ATD or test article, and sufficient slack

should be provided to allow motion of the ATD or test article without breaking the lead-wires or disconnecting the transducer. Calibration procedures should consider the effect of long transducer lead-wires. Head accelerometers and femur load cells should be installed in the ATD, in accordance with the ATD specification and the instructions of the transducer manufacturer. The load cell between the pelvis and the lumbar column should be installed in accordance with the approach shown in Figure 7-1 of this AC or in a manner that will provide equivalent data (see paragraph 7b).

(1) If an upper torso restraint is used, the tension load should be measured in a segment of webbing between the ATD's shoulders and the first contact of the webbing with hard structure (the anchor point or a webbing guide). Restraint webbing should not be cut to insert a load cell in series with the webbing, since that will change the characteristics of the restraint system. Load cells that can be placed over the webbing without cutting are commercially available. They should be placed on free webbing to minimize contact with hard structure, seat upholstery, or the ATD during the test. They should not be used on double-reeved webbing, multiple-layered webbing, locally stitched webbing, or folded webbing, unless it can be demonstrated that these conditions do not cause errors in the data. These load cells should be calibrated using a length of webbing of the type used in the restraint system. If the placement of the load cell on the webbing causes the restraint system to sag, the weight of the load cell can be supported by light string or tape that will break away during the test.

(2) Since load cells are sensitive to the inertial forces of their own internal mass and to the mass of fixtures located between them and the test article as well as to forces applied by the test article, it may be necessary to compensate the test data for that inaccuracy if the error is significant. Data for such compensation will usually be obtained from an additional dynamic test that replicates the load cell installation but does not include the test item.

e. Restraint System Adjustment. The restraint system must not be tightened beyond the level that could reasonably be expected in use, and the emergency locking device (inertia reel) must not be locked prior to the impact. Automatic locking retractors must be allowed to perform the webbing retraction and automatic locking function without assistance. Care must be taken to assure that emergency locking retractors that are sensitive to acceleration do not lock prior to the impact test because of pre-impact acceleration applied by the test facility. If comfort zone retractors are used, they must be adjusted in accordance with instructions given to the user of the restraint system.

(1) If manual adjustment of the restraint system is required, slack must be removed, and the restraint system should be snug but not excessively tight, about the ATD. For test 2, this can normally be determined when two fingers fit snugly between the belt and the pelvis of the ATD. The restraint system shall be checked and adjusted just prior to the floor deformation phase of the test.

(2) If the system is tested in other than a “horizontal floor” position (see paragraph b(10) above), the restraint should be properly adjusted with the seat in the

"horizontal floor" position and the webbing transducers installed (if required). After sufficient time has elapsed to allow the cushion to reach an equilibrium position, the webbing should be marked to indicate the correct adjustment point. The seat and ATD should then be installed on the fixture in the appropriate dynamic test orientation and the restraint system again adjusted to that same point.

(3) An alternative method to impose a 1-g pre-load is to measure the position of the ATD hip joints relative to the floor as shown in Figure 10-1 below. The ATD is then depressed into the cushion to reproduce this relative position after the ATD and seat have been installed on the fixture, as shown in Figure 10-2. The lap belt may be tightened to maintain this position. This load may make it impossible to insert two fingers between the lap belt and the pelvis of the ATD, but it should not produce a cushion displacement in excess of that measured by placing the ATD on the seat in a 1-g orientation.

f. Floor Requirement. A floor is not required for Test 2, but if a floor is installed, it should not influence the behavior of the seat or unduly restrict the movement of the ATD's feet. This is a concern especially when floor distortion is applied. For consistency, a floor should be used for tests used to gather head path data.

g. Seat Components. Seats frequently consist of components that are both integral to and ancillary to the seat's basic design and function. Historically, anything that is attached to the seat has been treated as part of the seat from a type design standpoint. However, these items can be divided into several categories with different methods of substantiation in order to facilitate simplified compliance methods. In summary, these categories are as follows:

- Features of the seat that affect its dynamic performance,
- Operationally removable items attached to the seat,
- Small items that can be verified by inspection, and
- Lifevests.

Appendix 5 describes in detail methods to address compliance for each type of item.

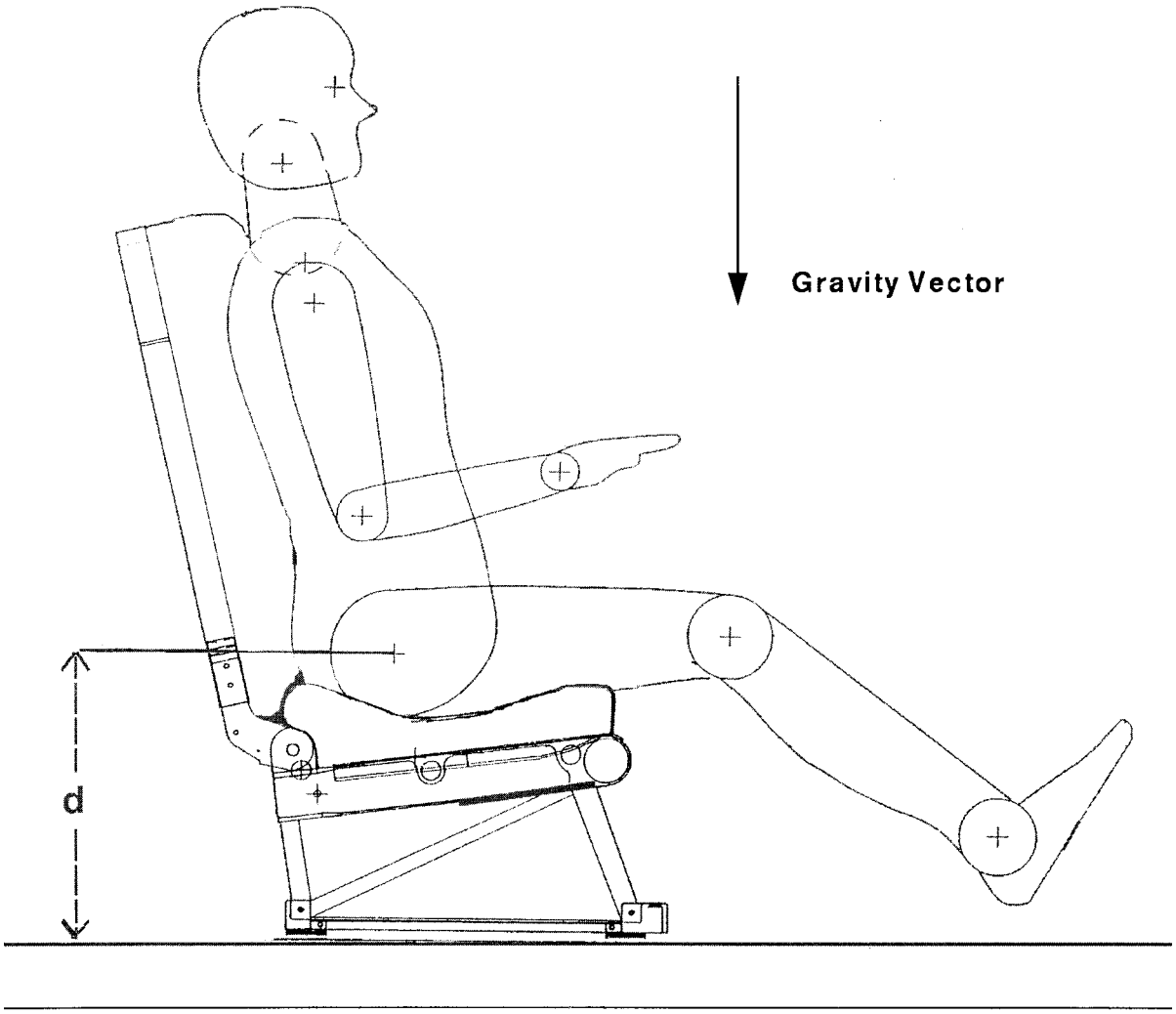

Figure 10-1
Measurement of 1g Pre-load

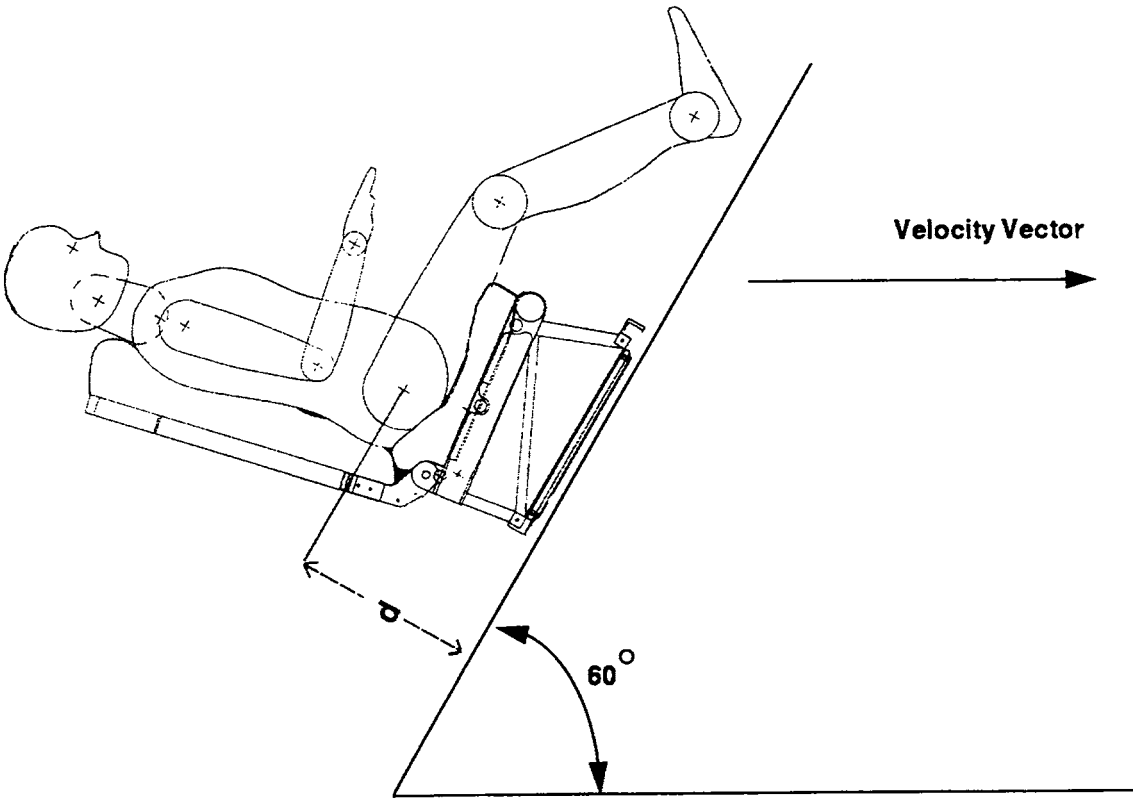

Figure 10-2
Test Orientation—1g Position

11. DATA REQUIREMENTS. The data should include charts, listings, and/or tabulated results, and copies of any photo instrumentation used to support the results. The following should be recorded:

- Impact pulse shape
- Head Injury Criterion (HIC) results for all ATDs exposed to head impact with interior components of the airplane or head strike paths and velocities, if head impact is likely but could not be evaluated by these tests
- Total velocity change
- Upper torso restraint system load, if applicable
- Compressive load between the pelvis and the lumbar column
- Retention of upper torso restraint straps, if applicable
- Retention of pelvic restraint
- Femur loads, if applicable
- Seat attachment (including structural damage)
- Seat deformation
- Seat attachment reaction time histories (if load cells are used)
- Retention of items of mass
- Evaluation of seat egress

12. DATA ANALYSIS.

a. General. All data obtained in the dynamic tests should be reviewed for errors. Baseline drift, ringing, and other common electronic instrumentation problems should be detected and corrected before the tests. Loss of data during the test is readily observed in a plot of the data versus time and is typically indicated by sharp discontinuities in the data, often exceeding the amplitude limits of the data collection system. If these occur early in the test in essential data channels, the data should be rejected and the test repeated. If they occur late in the test after the peak data in each channel has been recorded, the validity of the data should be carefully evaluated, and the maximum values of the data may still be acceptable for the tests described in this AC. The HIC does not represent simply a maximum data value, but an integration of data over a varying time base. The head acceleration measurements used for that computation are not acceptable,

if errors or loss of data are apparent in the data during the time the ATD head is in contact with the airplane interior features during the test.

b. Impact Pulse Shape. Data for evaluating the impact pulse shape is obtained from an accelerometer that measures the acceleration in the direction parallel to the inertial response shown in Figure 3-1 of this AC. The impact pulses intended for the tests discussed in this AC have an isosceles triangle shape. These ideal pulses are considered minimum test conditions. Since the actual acquired test pulses will differ from the ideal, it is necessary to evaluate the acquired test pulses to insure the minimum requirements are satisfied. The five properties of the ideal pulse that must be satisfied by the acquired test pulse are as follows (see Figure 3-1):

Pulse shape:	isosceles triangle
G_{req}:	peak deceleration required by test condition
T_{req}:	rise time required by test condition
V:	total velocity change required by test condition
V_{tr}:	velocity change required during T_{req} ($V_{tr} = V/2$)

A graphical technique can be used to evaluate pulse shapes that are not precise isosceles triangles. Appendix 1 of this AC presents the graphical method of evaluating the acquired pulse (the recorded test sled acceleration versus time). For the acquired pulse to be acceptable, the following five criteria must be met:

(1) The magnitude of the peak value for the acquired pulse, G_{pk}, must be greater than or equal to G_{req}.

(2) The actual rise time, $Tr = T_2 - T_1$, must be less than or equal to T_{req}.

(3) The result of integrating the acquired pulse during the interval from $t = T_1$ to $t = T_3$ must be equal to or greater than V_{tr}, one-half of the required velocity change for the specified test. If the magnitude of the acquired pulse is greater than the ideal pulse during the entire interval from T_1 to T_3, this requirement is automatically met.

(4) The result of integrating the acquired pulse during the interval from $t = T_1$ to $t = T_1 + 2.3\ (T_{req})$ must equal or exceed the required test velocity change, V, of the test condition. If the acquired pulse returns to zero g's at $t = T_4 < (T_1 + 2.3\ (T_{req}))$, the end of the interval of integration is reduced to $t = T_4$;

(5) If the magnitude of the acquired pulse is greater than the ideal pulse during the entire interval of $t = T_1$ to T_2 and the parameters of paragraphs (1) through (4) above are satisfied, then the acquired pulse is acceptable.

(6) If the magnitude of the acquired pulse is not greater than the ideal pulse during the entire interval $t = T_1$ to $1.33(T_3 - T_1)$, the difference between acquired pulse and the ideal must be no greater than 2.0 g's at those times when the acquired pulse is less

than the ideal. The parameters of paragraphs (1) through (4) above must also be satisfied for the acquired pulse to be acceptable.

c. Total Velocity Change. Impact velocity can be obtained by measurement of a time interval and a corresponding sled displacement that occurs just before or after (if appropriate) the test impact and then dividing the displacement by the time interval. When making such a computation, the possible errors of the time and displacement measurements are used to calculate a possible velocity measurement error, and the test impact velocity should exceed the velocity shown in Figure 1 by at least the velocity measurement error. If the sled is not changing velocity during the immediate preimpact or postimpact interval, the impact velocity is the total velocity change. If the sled is changing velocity during the immediate pre-impact or post-impact interval or if the facility produces significant rebound of the sled, the total velocity change can be determined by integrating the plot of sled acceleration versus time, as described in Appendix 1. If this method is used, the sled acceleration is measured in accordance with Channel Class 60 requirements.

d. Head Injury Criterion (HIC).

(1) Data for determining the Head Injury Criterion (HIC) need to be collected during the tests discussed in this AC only if the ATD's head is exposed to an impact on airplane interior features (not including the floor or the ATD's own leg) during the test. The HIC is calculated according to the following equation:

$$HIC = \left[(t_2 - t_1) \left[\frac{1}{(t_2 - t_1)} \int_{t_1}^{t_2} a(t)\, dt \right]^{2.5} \right]_{max}$$

Where t_1 and t_2 are any two points in time (in seconds) during the head impact, and a(t) is the resultant head acceleration (expressed in g's) during the head impact.

(2) The HIC is invariably calculated by computer based data analysis systems, and the discussion that follows outlines the basic method for computation. The HIC is based on data obtained from three mutually perpendicular accelerometers installed in the head of the ATD in accordance with the ATD specification. Data from these accelerometers are obtained using a data system conforming to Channel Class 1000, as described in SAE Recommended Practice J211. Only the data taken during head impact with the airplane interior need be considered; this is usually indicated in the data by a rapid change in the magnitude of the acceleration. Film of the test may show head impact that can be correlated with the acceleration data by using the time base common to both electronic and photographic instrumentation. Simple contact switches that do not significantly alter the surface profile could also be used to define the initial contact time.

(3) In many cases, a full system sled test to evaluate specific occupant injury conditions may not be needed to evaluate a redesign of the seat system that affects only HIC. In such cases, the photometric head path data can be gathered and used to ensure no contact will occur or to define the head angle and velocity at impact. It is acceptable to consider seat back rotation or deflections that occur under the dynamic load condition in an analysis to show that there is no head contact with the seat forward. Adding 3 inches to the 50thpercentile ATD head path is typically acceptable to account for the 95% occupant head path (see Appendix 4). These data can be used in a component test of severity comparable to the whole system sled test. Other factors, such as the inertial response of the impact target, must be accounted for in the component test condition so that the impact condition is representative. Component testing methods must be demonstrably comparable to whole system sled tests as a HIC measure, and the specific methodology used will require approval by the FAA.

Additionally, a seat may be designed for use in multiple locations where head contact against a range on unknown bulkhead targets is anticipated (for example, front row seats). For these seats, HIC may be measured using a representative impact target mounted in front of the seat at the installation setback or range of setbacks. This target will represent typical fixtures, such as galleys, partitions, lavatories, and closets, and its stiffness will be representative for those monuments. If contact occurs, the HIC must not exceed 1000.

e. Upper Torso Restraint System Load. The maximum load in the upper torso restraint system webbing can be obtained directly from a plot or listing of webbing load transducer output. If a three-axis load transducer fixed to the test fixture is used to obtain these data, the data from each axis is combined to provide the resultant vector magnitude. If necessary, corrections are made for the internal mass of the transducer and the fixture weight it supports. This correction will usually be necessary only when the inertial mass or fixture weight is high or when the correction becomes critical to demonstrate that the measurements fall below the specified limits. Restraint load data may be reduced by the ratio of the actual peak pulse versus the required peak pulse up to a maximum of 10 percent of the measured load. For example, a restraint system load of 1800 lbs that had a peak pulse of 16.9g, could be reduced to 16/16.9 of 1800, or 1704 lbs.

f. Compressive Load Between the Pelvis and Lumbar Column. The maximum compressive load between the pelvis and the lumbar column of the ATD can be obtained directly from a plot or listing of the output of the load transducer at that location. Since most load cells will indicate tension as well as compression, care should be taken that the polarity of the data has been correctly identified. As with restraint system loads, lumbar load data may be reduced by the ratio of the actual peak pulse versus the required peak pulse up to a maximum of 10% of the measured load. For example, a lumbar load of 1590 lbs for a Test 1 (14g down test) that had a peak pulse of 15g could be reduced to 14/15 of 1590, or 1484lbs.

g. Retention of Upper Torso Restraint Straps. Retention of the upper torso restraint straps on the ATD's shoulders can be verified by observation of photometric or documentary camera coverage. The straps must remain on the ATD's shoulder until the ATD rebounds after the test impact and the upper torso restraint straps are no longer carrying any load. The straps must not bear on the neck or side of the head and must not slip to the upper rounded portion of the upper arm during that time period.

h. Retention of Pelvic Restraint. Retention of the pelvic restraint on the ATD's pelvis can be verified by observation of photometric or documentary camera coverage. The pelvic restraint must remain on the ATD's pelvis, bearing on or below each prominence representing the anterior superior iliac spine, including until after the ATD rebounds after the test impact. Provided that the pelvic restraint remains on the ATD's pelvis, trapping of the belt between the leg and the pelvis is acceptable.

Movement of the pelvic restraint above the prominence is usually indicated by an abrupt displacement of the belt onto the ATD's soft abdominal insert which can be seen by careful observation of photo data from a camera located to provide a close view of the belt as it passes over the ATD's pelvis. This movement of the belt is sometimes indicated in measurements of pelvic restraint load (if such measurement are made) by a transient decrease or plateau in the belt force as the belt slips over the prominence, followed by a gradual increase in belt force as the abdominal insert is loaded by the belt.

i. Femur Load. Data for measuring femur loads can be collected in the tests discussed in this AC, if the ATD's legs contact seats or other structure. Data need not be recorded in each individual test, if rational comparative analysis is available for showing compliance. For large clearance installations (distance from seat SRP to strike target is more than 40 inches nominally), no data is necessary to substantiate femur loads.

13. PASS/FAIL CRITERIA. The dynamic impact tests must demonstrate that:

a. The seat system remains attached to the test fixture at all points of attachment, the occupant restraint system remains attached at all points of attachment, and the primary load path remains intact.

(1) For the purpose of showing compliance with the structural requirements of § 25.562, acceptable damage to the load-carrying structural elements includes bending, deformation, tension deformation, compression crippling, and shear buckling. Cracking of structural elements and the shearing or separation of rivets and minor delamination of composite panels is allowed, provided a continuous load path remains between the occupant and the seat attachments.

(2) Damage to seat belts, such as scuffing, fraying and breakage of fibers is considered acceptable. The seat belt should not be cut or torn by features of the seat or the belt adjuster mechanism. Cuts or tears should be investigated as to their cause and appropriate corrective action taken, although a retest may not be necessary.

b. If the ATD's head is exposed to impact with interior features during the test, a HIC of 1,000 is not exceeded.

c. Where upper torso restraint straps are used, tension loads in individual straps do not exceed 1,750 lbs(7.78 kN). If dual straps are used for restraining the upper torso, the total strap tension load does not exceed 2,000 lbs(8.90 kN) .

d. The maximum compressive load measured between the pelvis and the lumbar column of the ATD does not exceed 1,500 lbs (6.67 kN).

e. Where installed, the upper torso restraint straps remain on the ATD's shoulder during impact.

f. The pelvic restraint remains on the ATD's pelvis during impact.

g. Where leg contact with seats or other structure occurs, the axial compressive load in each femur does not exceed 2,250 lbs (10.0 kN).

h. The seat permanent deformations are within the quantitative limits of Appendix 2 of this AC and will not significantly impede an occupant from releasing his restraints, standing, and exiting the seat. In no case should deformation of the seat cause entrapment of the occupant, whether or not the defined limits referenced in Appendix 2 are exceeded.

> **NOTE**: With the exception of seatbacks, it is assumed that the maximum seat structural deformation will result from the structural evaluation (that is, single row Type 1 or 2 test). Once this is accomplished, it would not, therefore, be considered necessary to repeat deformation measurements after the injury criteria (multiple row) tests, unless the structural and injury criteria tests were combined into one test. Maximum deformation to the seatback usually occurs as a result of impact by the occupant to the rear of the seat.

i. All deployable items must remain stowed, unless it can be shown that they do not impede egress or cause serious injury (see Appendices 2 and 5).

14. TEST FAILURES VS. RETEST.

a. As noted in paragraph 13, a variety of failures can result in an unsuccessful test. Failures can range from structural separation of the seat from the tracks to deployment of items that impede egress. All such failures should be addressed and corrective action taken. However, the necessity of repeating tests following corrective action is the same decision process as that used to determine which tests are conducted initially.

b. Failures in any part of the primary load path, including the seat attachment to the track or restraint system attachment to the seat, will almost certainly require a retest. Failures in (secondary) internal structure may be able to be addressed analytically. For example, failures in members for which analytical substantiation is acceptable when making the test article selection (using the procedures outlined elsewhere in this AC), may not require a retest. However, each case should be assessed individually and a determination made that the failure point would not simply be transferred to another part of the load path. In general, members for which the failure mode is not catastrophic (for example, compressive failures in a forward leg as opposed to a tension failure in an aft leg for a 16g forward test) are less likely to warrant retest. The extent to which a secondary load path(s) can carry the load is a factor in determining the pass/fail of a structural test.

c. Special attention to the seat structure prior to the removal of floor warpage is advised. Structural failure can occur as a consequence of removal of floor warpage. If it can be determined that the damage or seat deformation occurred solely as a result of removing the floor warpage, it is not considered a failure.

d. Similarly, the evaluation of the seat attachment should be made before the seat tracks are straightened (unwarped). The process of straightening the seat tracks may result in a seat attachment becoming detached. This is not a test failure. The assessment for seat attachment should be made after the restraining force on the pitch-and-roll fixture has been released. It is not necessary to return the floor to a flat condition to evaluate the seat attachment. Once the evaluation for seat attachment has been completed, the floor may be returned to a flat state in order to take deformation measurements (if applicable).

e. Cuts or tears in a restraint system may not require a retest, if it can be demonstrated that the corrective action will be effective and if all other pass/fail criteria were met on the test in question.

f. Failures of attachments of items on the seat may be addressed analytically, provided that the corrective action does not impact the primary load path of the seat/occupant system or occupant injury criteria. However, the seat must be shown to be able to carry its full weight, including any attached items. Similarly, items that deploy should not require retests, if the corrective action does not affect the dynamic behavior of the seat or occupant.

g. If a test exceeds the minimum test conditions and results in a failure, an assessment of the test conditions and the failure mode must be made, and a rational basis for retest without a design change must be presented to allow a retest without modification.

15. TEST DOCUMENTATION.

a. General. The tests should be documented in reports that describe the procedures, limitations, results, and deviations to the tests discussed in this AC. In addition to the specific data requirements specified in paragraph 9 of this AC, the documentation should include the following:

(1) Facility data.

(a) The name and address of the test facility performing the tests.

(b) The name and telephone number of the individual at the test facility responsible for conducting the tests.

(c) A brief description and/or photograph of each test fixture.

(d) A statement confirming that all instrumentation and data collection equipment used in the test meet the facility's internal calibration requirements, that these calibration requirements are documented and available for inspection upon request, that all calibrations are traceable to a national standard, and that the records of current calibration of all instruments used in the test are maintained at the facility.

(e) A statement confirming that the data collection was done in accordance with the recommendations in this AC or a detailed description of the actual procedure used and technical analysis showing equivalence to the recommendations of this AC.

(f) The manufacturer, governing specification, serial number, and test weight of the ATDs used in the tests, and a description of any modifications or repairs performed on the ATDs that could cause them to deviate from the specification.

(g) A description of the photographic-instrumentation system used in the tests.

(2) Seat restraint system data.

(a) The manufacturer's name and identifying model numbers of the seat restraint system used in the tests with a brief description of the system, including identification and a functional description of all major components and photographs or drawings, as applicable. Qualifying approvals, such as Technical Standard Order (TSO) authorizations, should be included.

(b) For systems that are not symmetrical, an analysis supporting the selection of most critical conditions used in the tests.

b. Test Description. The description of the test should be documented in sufficient detail, so that the tests could be reproduced simply by following the guidance given in the report. The procedures outlined in this AC can be referenced in the report but should be supplemented by such details as are necessary to describe the unique conditions of the tests. For example:

(1) Pertinent dimensions and other details of the installation that are not included in the drawings of the test items should be provided. This can include footrests, restraint system webbing guides and restraint anchorages, "interior surface" simulations, bulkhead or sidewall attachments for seats or restraints, etc.

(2) The floor deformation procedure, guided by goals of most critical loading for the test articles, should be documented.

(3) The placement and characteristics of electronic and photographic instrumentation chosen for the test beyond that information provided by the facility should be documented. This can include special targets, grids, or marking used for interpretation of photo documentation, transducers, restraint system loads, floor reaction forces, or other measurements beyond those discussed in this AC.

(4) Any unusual or unique activity or event pertinent to conducting the test should be documented. This could include use of special "break away" restraints or support for the ATDs, test items or transducers, operational conditions or activities such as delayed or aborted test procedures, and failures of test fixtures, instrumentation system components, or ATDs.

(5) Any energy-absorbing features that are intended as part of the design and the expected structural behavior that will result should be documented.

16. COMPUTER MODELS.

a. Several computer models have been developed to represent the seat restraint/occupant system in a crash. Some of these models include representation of the vehicle interior as well. Models vary in complexity from simple spring-mass dynamic models to exceedingly complex models, that can help design an entire work station. Validation of these models also varies from no validation at all to complex validation efforts based on controlled testing and field experience. The use of these models during the design phase of seat restraint/interior systems for civil airplanes is encouraged. They can be of great assistance in predicting "most critical" conditions, in understanding the performance of systems when used by various sized occupants, in estimating head strike paths and velocities, and for many other uses of interest to the designer.

b. Advisory Circular 20-146 Methodology for Dynamic Seat Certification by Analysis for Use in Part 23, 25, 27, and 29 Airplanes and Rotorcraft provides criteria for the use of analytical modeling techniques and guidance on methods of compliance using computer models. We will continue to assess the performance of dynamic computer models and will continue to issue appropriate advisory material as these techniques are found to be useful alternatives to the tests discussed in this AC.

APPENDIX 1. PROCEDURES FOR EVALUATING PULSE SHAPES

1. This graphical procedure may be used to evaluate the impact pulse shape acquired from a test. While this procedure is based on graphical concepts, an accurate evaluation of the pulse parameters should be obtained using the digitized data and computer algorithms that provide the analysis illustrated in the following steps:

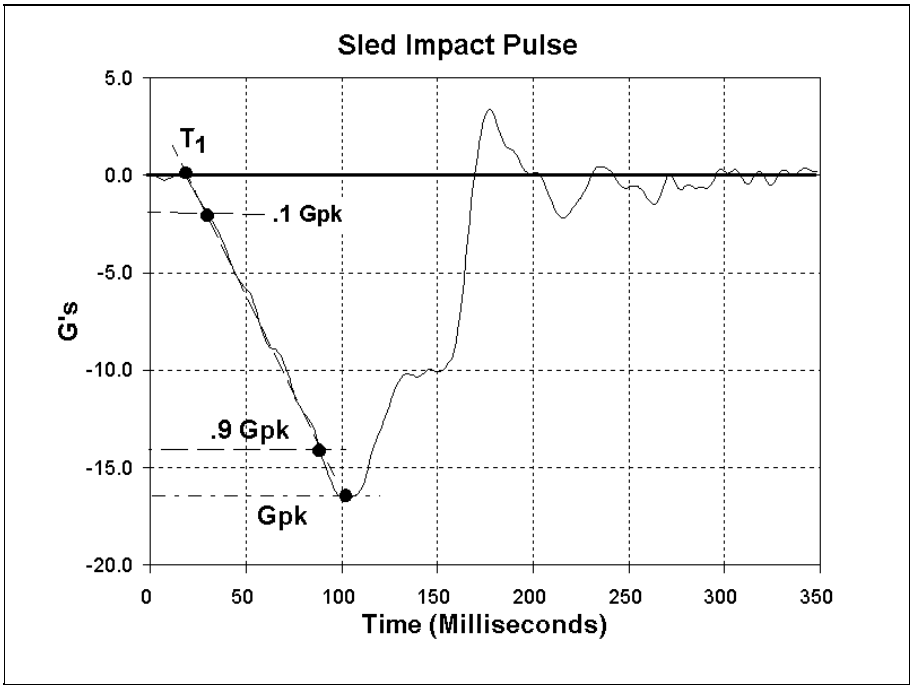

Figure A1-1

APPENDIX 1. PROCEDURES FOR EVALUATING PULSE SHAPES (CONTINUED)

2. On the plot of the acquire pulse, identify the peak deceleration point, Gpk, and points on the onset of the pulse equal to 0.1 Gpk and 0.9 Gpk. Construct an onset line through the points 0.1 Gpk and 0.9 Gpk. Extend the constructed onset line to the base line of the data plot, G=0. Identify the intersection of the constructed onset line and baseline as the start of the acquired pulse, T1. For the acquired pulse to be acceptable, the magnitude of Gpk must equal or exceed the minimum required pulse, Greq for the specified test condition.

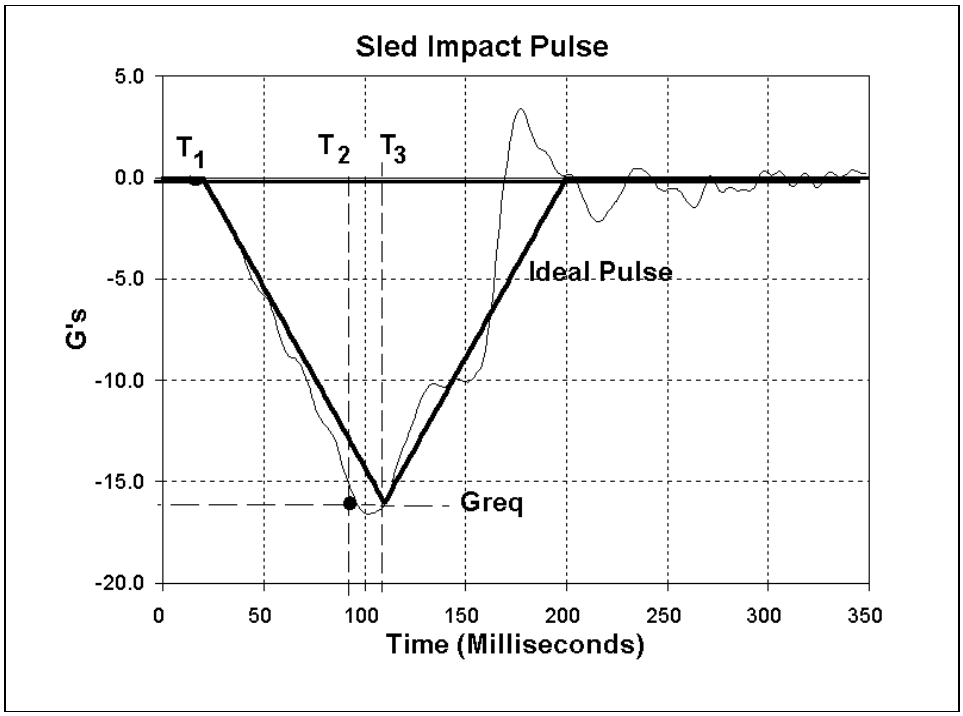

Figure A1-2

3. Using T_1 as the start time, construct the ideal pulse required for the test condition. Draw a vertical line and a horizontal line through the peak of the ideal pulse, Greq. The vertical line through Greq will intersect the time axis at the maximum allowed rise time, T_3. Draw another vertical line at the first intersection of the horizontal line through Greq and the acquired pulse after T_1. This vertical line will intersect the time axis at T_2. The actual rise time, $Tr = T_2 - T_1$, must be less than or equal to Treq for the acquired pulse to be acceptable.

APPENDIX 1. PROCEDURES FOR EVALUATING PULSE SHAPES (CONTINUED)

4. Compute the velocity change, Vra, of the acquired pulse during the interval T_1 to T_3. Observe that T_3 will usually occur after the peak, Gpk, of the acquired pulse. For the
acquired pulse to be acceptable, Vra must be at least one-half the total velocity V, required for the specified test condition.

5. If the total velocity change for the test is calculated from the acquired pulse, use the interval starting at T_1 and ending:

a. At the point T4, defined as where the acquired pulse first intersects the baseline, G = 0, after the time of Gpk, or

b. At the time equal to: $T_1+2.3xTreq$, whichever occurs first.

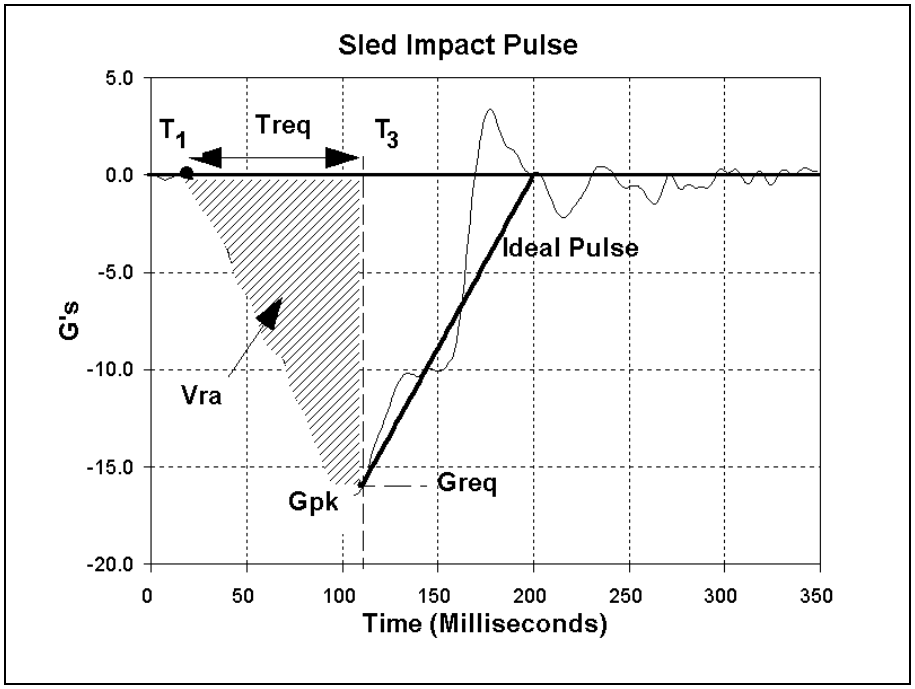

Figure A1-3

APPENDIX 1. PROCEDURES FOR EVALUATING PULSE SHAPES (CONTINUED)

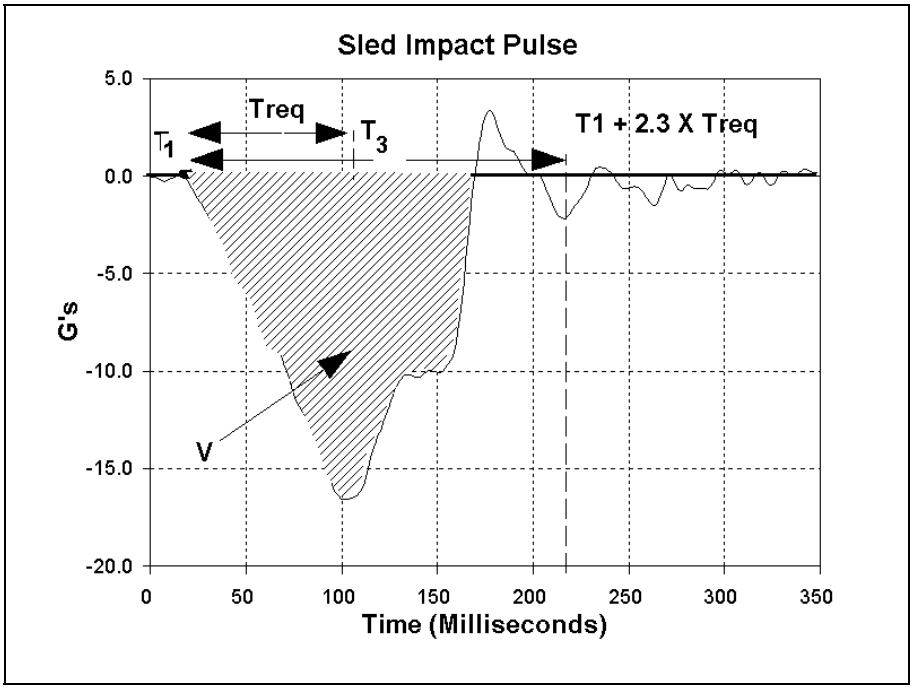

Figure A1-4

6. Construct a line parallel to the ideal (minimum regulatory requirement) pulse and offset by 2 g in magnitude less than the ideal during the time interval between T_1 and T_3. Likewise construct a line parallel to the ideal pulse and offset by 2 g in magnitude less than the ideal (minimum regulatory requirement) pulse on the trailing side of the pulse from:

$$T_3 < t < T_1 + 1.33(T_3 - T_1)$$

APPENDIX 1. PROCEDURES FOR EVALUATING PULSE SHAPES (CONTINUED)

If the magnitude of the acquired pulse is 2 g less than the ideal pulse shape at any point along the acquired pulse shape during the period $T_1 < t < T_1 + 1.33(T_3 - T_1)$, the pulse is unacceptable. As an example, the 16 g test specified for Test 2 in 14 CFR 25.562 has a rise time ($T_3 - T_1$) of 90 milliseconds. For a test pulse to be in compliance with the 16 g test pulse, the magnitude of the acquired pulse can be no less than 2 g from the ideal pulse during the time interval from $T_1 < t < (T_1 + 120)$ milliseconds. The acquired pulse shown in Figure A1-5 is unacceptable because the acquired pulse magnitude is more than 2 g below the tolerance band during the onset period.

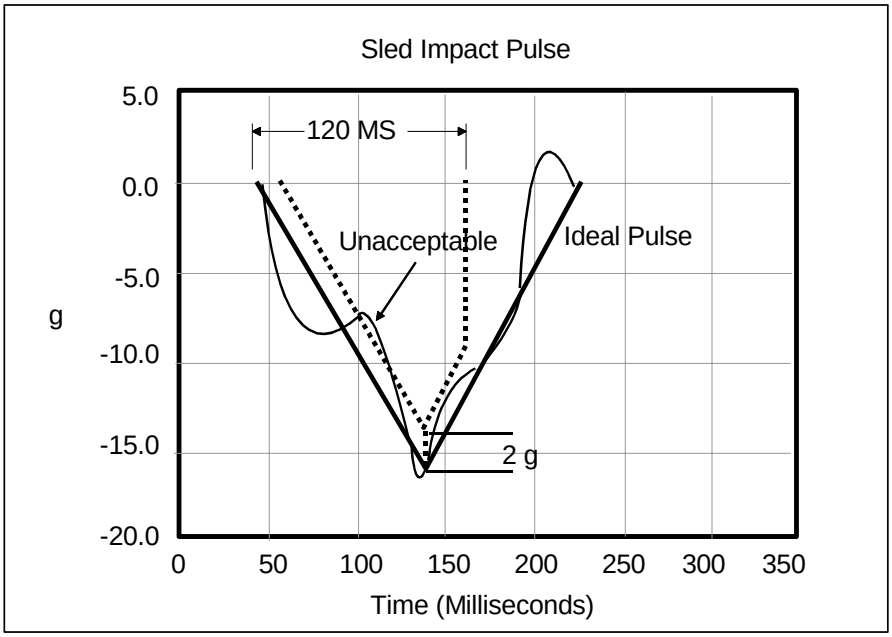

Figure A1-5

APPENDIX 2. SEAT DEFORMATION

1. GENERAL. Seats may deform due to either the action of discrete energy absorber systems included in the design or to plastic deformation of their structural components. If this deformation is excessive, it could impede the airplane emergency evacuation process. Each seat design may differ in this regard and should be evaluated according to its unique deformation characteristics. If floor deformations are applicable, consistency in pre and post-test measurements must be maintained. If the pre-test measurements are made before floor deformations are applied, the post-test measurements must be made after floor deformations have been removed. Conversely, if the pre-test measurements are made after floor deformations are applied, the post-test measurements shall be made before removal of floor deformations.

2. FIXED SEATS. The following post-test deformations and limitations regarding emergency exit egress may be used for showing compliance with §§ 25.561(d) and 25.562(c)(8). Dimensions specified for undeformed seat rows assume the maximum permanent deformation discussed below and are given to enable evaluation of an installation without having to make reference to test reports. In those cases where the actual permanent deformations are less than maximum, the specified dimensions for undeformed seat rows could be correspondingly decreased (except where clearance is specified for aisles, passageways, etc.).

a. Forward or Rearward Directions. Seats that exhibit forward or rearward deformations should not exceed a maximum of 3.0 inches (75 mm). In this case, the minimum clearance between undeformed seat rows, measured as shown in Figure A2-1 of this appendix, should be 9.0 inches (228 mm) or, alternatively, 6.0 inches (150 mm), plus the actual fore/aft deformation. Seat rows that lead to Type III exits are subject to the specific access requirements for those exits. This will result in greater spacing at those seat rows in the undeformed case. For seats with deformations that exceed 3.0 inches, the undeformed clearances should be increased accordingly.

In addition, at seat rows leading to Type III or IV exits, 20 inches (508 mm) minimum clearance, measured above the arm rests, must be maintained between adjacent seat rows. At other seat rows, the most forward surface of the seat back shall not deform to a distance greater than one half the original distance to the forward-most hard structure on the seat (see Figure A2-2 of this appendix). These measurements may be made on the center line of the seat with the seat backs returned to their upright position, using no more than original seat back breakover forces, typically 25-35 pounds (111-155 N).

b. Downward Direction. There is no limit on downward permanent deformation, provided that the feet or legs of occupants will not be trapped by the deformation.

c. Seat Rotation. The seat bottom rotational permanent deformation must not result in an angle that exceeds 20 degrees pitch down or 35 degrees pitch up from the horizontal plane. This rotational deformation is measured between the fore and aft extremities of

APPENDIX 2. SEAT DEFORMATION (CONTINUED)

the seat pan at the centerline of each seat bottom (see Figure A2-3 of this appendix). Rotation of the seat pan must not entrap the occupant.

d. Sideward Direction.

(1) The deformed seat should not encroach more than 1.5 inches (38 mm) into the required longitudinal aisle space at heights up to 25 inches (635 mm) above the floor. The determination of which parts of the seat are at what heights is determined prior to testing.

(2) The deformed seat should not encroach more than 2.0 inches (50 mm) into the longitudinal aisle space at heights 25 inches (635 mm) or more above the floor.

e. Additional Considerations. In addition, none of the above deformations may permit the seat to:

(1) Affect the operation of any emergency exit or encroach into an emergency exit opening for a distance from the exit not less than the width of the narrowest passenger seat installed in the airplane.

(2) Encroach into any required passageway.

(3) Encroach more than 1.5 inches (38 mm) into any cross-aisle or flight attendant assist space.

f. Deployable Items. Certain items on the seat, such as food trays and legrests, are used by passengers in flight and are required to be stowed for taxi, takeoff, and landing. Deployment of such items should be treated as "permanent deformation" if the item deploys into an area that must be used by multiple passengers (in addition to the occupant of the seat) for egress. Such deployments can be considered acceptable, even if they exceed the dimensions specified in paragraphs (a) through (e) above, if they are readily pushed out of the way by normal passenger movement and then remain in a position that does not affect egress. Small items, such as cup holders, ash trays, and trim pieces, are not considered a significant impedance to egress and do not require evaluation as a deployed item. (See also Appendix 5.)

3. STOWABLE SEATS. Stowable seats that may impede egress must stow post-test and remain stowed to the extent necessary in order to satisfy the criteria as applied to fixed seats in paragraphs 2(a) through(d) and 2(e)(2) and (3) of this Appendix.

a. Seats that are Stowed Manually. A post-test stowage force no greater than 10 pounds (45 N) above the original stowage force may be used to stow the seat.

APPENDIX 2 SEAT DEFORMATION (CONTINUED)

b. Seats that Stow Automatically. A seat that may interfere with the opening of any exit must automatically retract to a position where it will not interfere with the exit. For determining encroachment into passageways, cross-aisles, and assist spaces, a post-test stowage force no greater than 10 pounds (45 N), applied at a single point, may be used to assist automatic retraction.

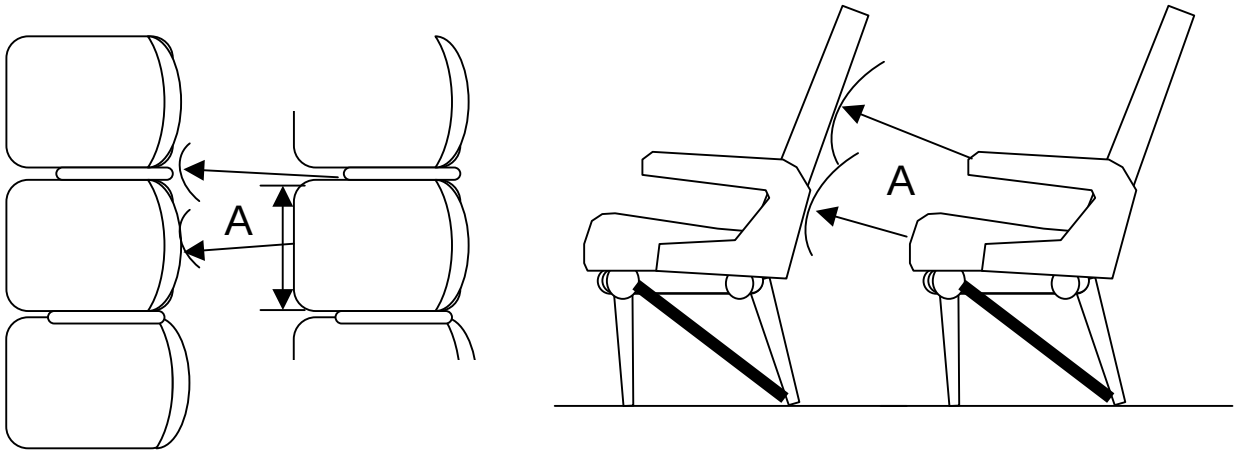

Measurement to be taken over full width of seat bottom cushion

Figure A2-1

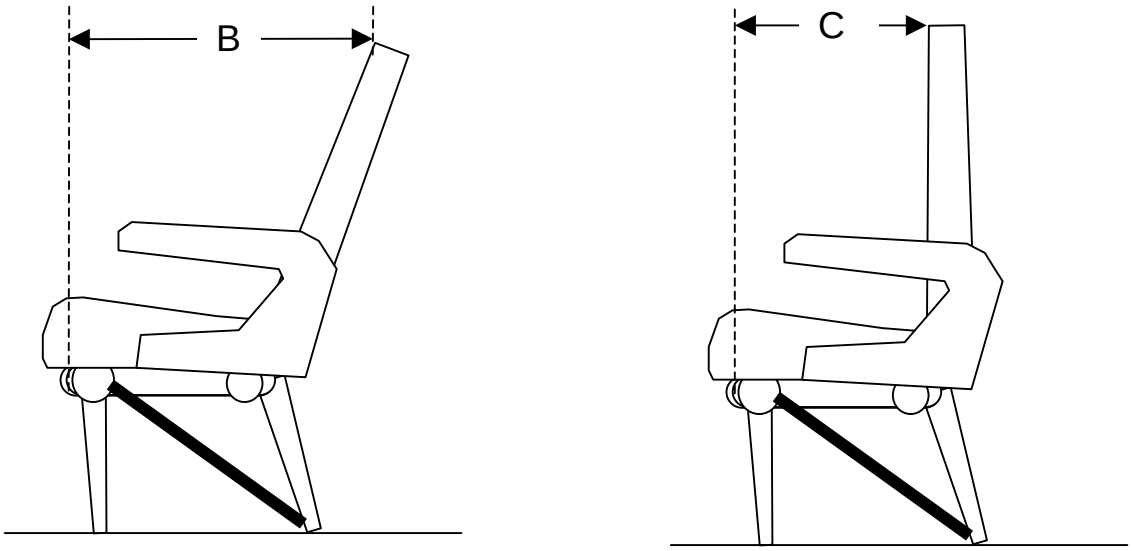

Pre-test Condition Post-test Condition

Dimension "C" must be at least 50 percent of Dimension "B"

Figure A2-2

APPENDIX 2 SEAT DEFORMATION (CONTINUED)

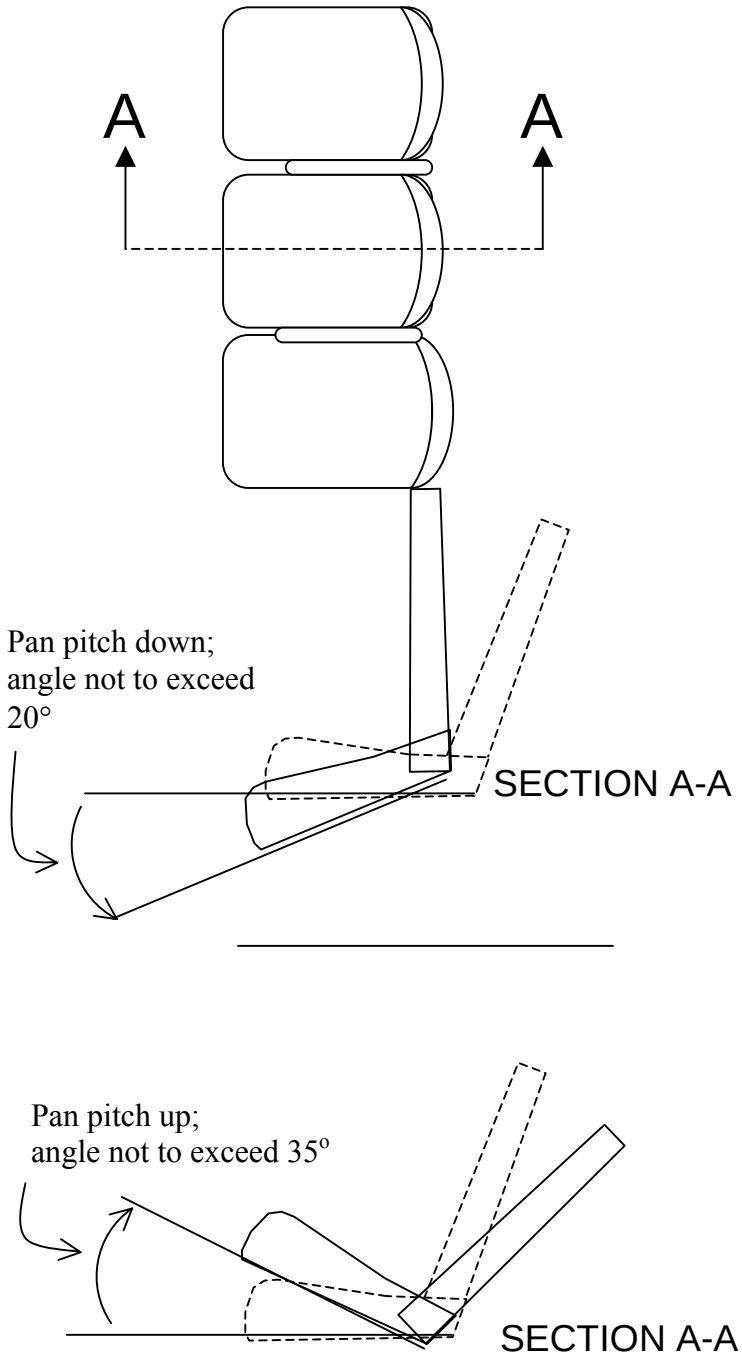

Figure A2-3
Maximum Post-test Seat Pan Rotation

APPENDIX 3. SEAT FAMILY DEFINITION

1. This appendix discusses the primary components that make up a seat assembly and how those components can vary between seat assemblies within a family. In addition, a discussion of appropriate means of substantiation for each element is given.

2. While the discussion below addresses the evaluation of seat components as individual members, the dynamic performance of the entire seat assembly with all variations/modifications incorporated must also be evaluated against the tested seat assemblies. For example, a seat with variations from the tested seat in legs, beams, *and* spreaders might require test even though the change in any one element might not require test.

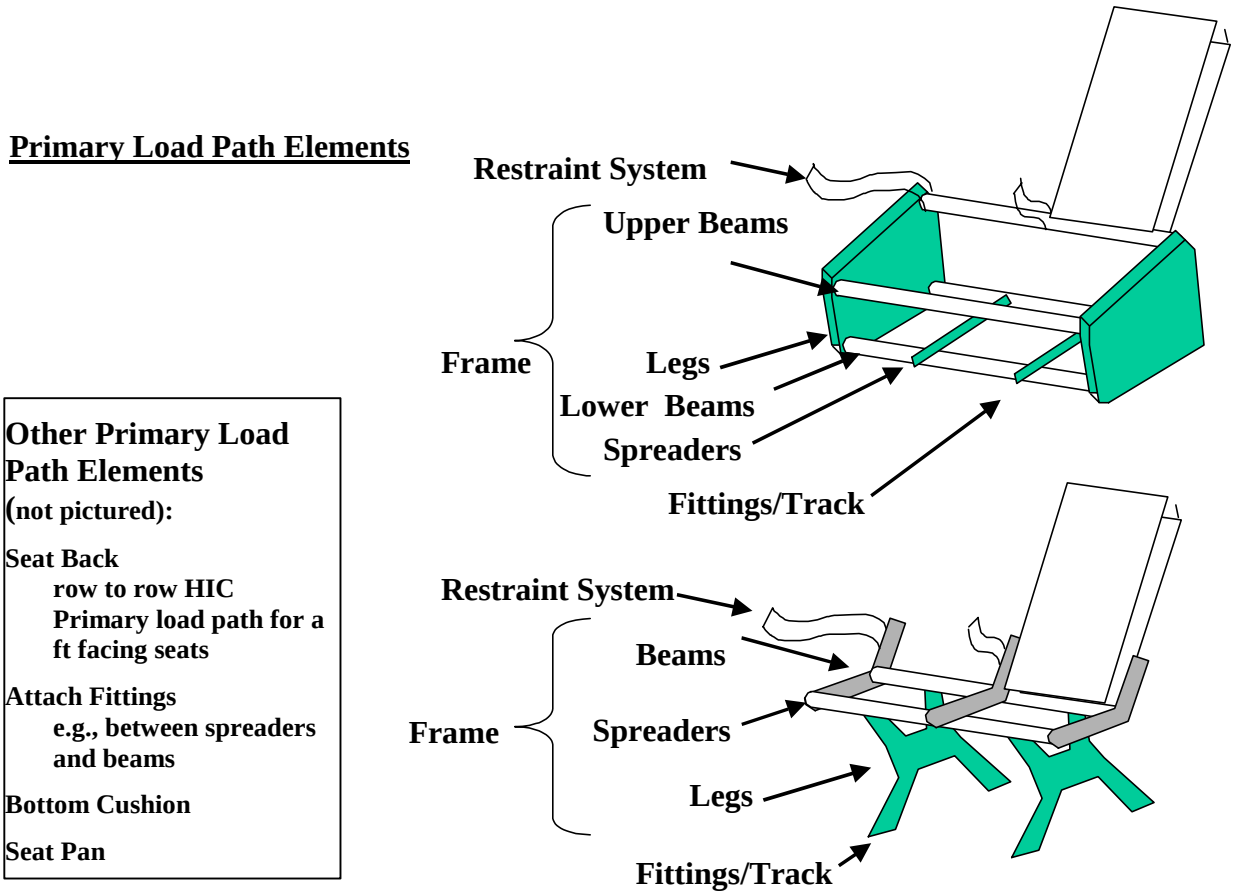

Figure A3-1

APPENDIX 3. SEAT FAMILY DEFINITION (CONTINUED)

3. The following discussions of the various seat components are structured as follows:

- Description of the family concept/principles governing a specific component.

- Discussion and guidelines for component variations within the family that are acceptable, using rational analyses without test. This is generally for changes that do not make that component or other features more critical than those found on the tested seat.

- Discussion and guidelines for variations in a seat family that will require substantiation by test. Generally, component variations that make the seat more critical than the tested seat(s) will require additional tests. There is a degree of redundancy in this portion of the discussion in that variations that require test are explicitly stated rather than simply relying on implications of the preceding section, which documented those things permissible by analysis. While this approach does increase the size of the document, it should reduce confusion when specific circumstances arise.

4. The term "variations" denotes both variations in design from one seat to another and changes/modifications made post test or post certification and those resulting from test failures. It is also important to note that the point of reference for variations is the seat that was tested. Guidance with respect to restraint systems addresses the potential for variations across several seat models in the family with more than one restraint.

5. As noted previously in paragraph 5c of this AC, the guidelines given here are intended to be integrated with the design phase. Application of these guidelines and the test article selection process of paragraph 5 to previously approved seats should be done with caution. Since the objective of this process is to minimize the amount of testing necessary through commonality among designs, it is expected that the seat family will incorporate compromises to that end which might not otherwise have been included. In the case of certification programs that are already completed, this might not have been the case. Therefore, it is doubtful that the principles given here could be applied in total after the fact. These principles should still be useful, however, in assessing the magnitude of changes and variations to designs that have already been approved.

6. Seat Legs.

a. Family of seat principles. Seat legs are typically the vertical structural members of the seat that provide the load path from the upper seat structure (e.g., upper beams or pan) to the lower seat structure (e.g., lower beams or track fittings). Energy-absorbers may be incorporated into the seat leg design (see paragraph 14 of this appendix). To be eligible to belong in a particular seat family, seat legs must utilize the same design philosophy, section properties, and energy absorber (if used).

APPENDIX 3. SEAT FAMILY DEFINITION (CONTINUED)

NOTE: Seat track fittings that interface with airplane structure are addressed in paragraph 13 of this appendix.

b. Variations and post certification changes acceptable by analysis. Variations to the seat leg geometry are acceptable without additional test(s), provided it can be shown by rational analysis that the strength, stiffness, and seat permanent deformation are equivalent to or less critical than the tested seat(s). For example, an increase in distance between the front and rear fitting would be acceptable, provided it could be shown by rational analysis that:

- The floor fitting loads are equivalent to or less critical than the seat leg of the tested seat (for example, linear interface loads analysis),

- The strength of the portion of the leg that varies to accommodate the increase in distance is equivalent to or less critical than the seat leg of the tested seat,

- The stiffness of the leg is similar to the critical leg in the longitudinal and vertical load conditions.

Holes or other minor variations to the seat leg that are not located in a highly stressed area are acceptable. For example, holes drilled in the leg web to attach under-seat electronics boxes are acceptable, provided the hole is not in a highly stressed area of the leg.

c. Variations and post certification changes requiring additional tests. Additional tests would be selected, based on the role that the variation plays in the seat performance. For example, a material change to a portion of the seat leg may require an additional 16g forward structural test but not require additional HIC or lumbar tests. An additional test must be performed for:

- Any seat with a seat leg geometry that is determined to be more critical with regard to strength, stiffness, or seat permanent deformation than the critical leg of a similar tested seat.

- Any seat with a seat leg energy absorber that has a variation in the load path or a variation that affects the load rating or stroke/deformation of the energy absorber, compared to the seat(s) included in the baseline testing.

Static or dynamic component tests may be acceptable to substantiate variations to seat legs. Component test methods should be coordinated with the appropriate regulatory agency in advance of the certification program.

APPENDIX 3. SEAT FAMILY DEFINITION (CONTINUED)

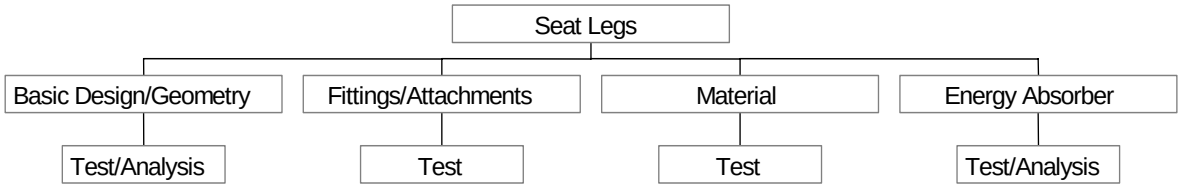

Note: Basic design/geometry includes small, local changes to the legs.
Fittings include attachments to cross-beams, fittings and spreaders.
Component tests may be appropriate instead of a full scale test.

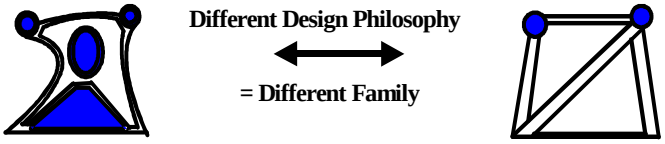

Figure A3-2

7. Lateral Beams (Cross Tubes).

a. Family of seat principles. Lateral beams (cross tubes) are typically the structural members that provide the load path from the fore-aft linkages (for example, spreaders) and bottom cushion support to the vertical structure (for example, legs). Lateral beams at similar locations within the seat assemblies must have the same design philosophy.

(1) Lateral beams may also have stiffeners in the form of tubes-within-tubes that vary within the family. Two types of stiffeners are considered here. The first is a local doubler added to reinforce areas with high stress concentrations. A local doubler is defined as one whose length is of the same order of magnitude as the maximum cross-sectional dimension of the beam. The second is a longer stiffener (for example, nested tubes) used to increase beam stiffness and strength over a substantial part of the beam length. Lateral beams with long stiffeners should be treated as a different family, requiring a new, different test program since the dominant cross-section for the beam is different than other beams in the seat family.

(2) Lateral beams can include local inserts within the family (for example, doublers) that typically provide local strengthening of the beam. Inserts at similar locations within the seat assemblies must have the same material and manufacturing process and must have similar attachment methods. An insert configuration used in the primary load path (for example, at the leg or spreader attachments) at all similar primary load path locations within the seat for all seats does not need additional substantiation beyond the baseline testing. For example, an insert included at any rear beam leg

APPENDIX 3. SEAT FAMILY DEFINITION (CONTINUED)

attachment should be included at all rear beam leg attachments for all seats in the family. Variations in geometry (length and thickness) are discussed below.

(3) Nested tubes within a seat family must have the same material and manufacturing process and must have similar attachment methods. Variations in length are discussed below.

b. Variations and post certification changes acceptable by analysis.

(1) The following variations in local inserts are acceptable without additional test(s), provided it can be shown by rational analysis that the strength, stiffness, and seat permanent deformation are equivalent to or less critical than the tested seat(s).

- Insert thickness
- Insert length
- Insert location
- The elimination of a local insert in some locations of the seat assembly, if the analysis clearly demonstrates the adequacy of the attachment without the insert.

(2) Variations in the lateral beam length to accommodate differences in seat width are acceptable without additional test/analysis, provided the seat is included in the interface load analysis used in the test article selection process of paragraph 5 of this AC.

(3) Variations in nested tubes length and location are acceptable without additional test(s), provided it can be shown by rational analysis that the strength, stiffness, and seat permanent deformation are equivalent to or less critical than the tested seat(s).

c. Variations and post certification changes requiring additional tests. The structural performance of any seat with a lateral beam or nested tube possessing a variation in material, geometry (except for length), or manufacturing process from the seat(s) evaluated by test. An additional test(s) must be performed for any seat that:

(1) If lateral beam doublers are used, does not have lateral beam doublers at all similar primary load path locations within the seat,

(2) Has lateral beam doublers that have a variation in material, geometry (except for length or thickness), or manufacturing process from the tested seat(s).

(3) Has lateral beam doublers or nested tubes that have a variation in length that is determined to be more critical with regard to strength, stiffness, or seat permanent deformation than the tested seat(s).

APPENDIX 3. SEAT FAMILY DEFINITION (CONTINUED)

(4) Has lateral beam doublers or nested tubes that have a variation in attachment method that is determined to be more critical with regard to strength than the tested seat(s).

8. Seat Spreaders.

a. Family of seat principles. A seat spreader is typically a fore-aft linkage between the lateral beams. Seat spreaders often provide the structural load path for other features of the seat (for example, a seat belt attachment or seat back attachment). Spreaders at similar locations within the seat assemblies should have the same design.

b. Variations and post certification changes acceptable by analysis. Variations to parts of the spreader that are not in the primary load path (for example, between the seat belt/seat back attachments and the top of the armrest) are acceptable without additional tests or analysis. An example is the area of the spreader that extends beyond the seat belt or seat back attachment that incorporates an armrest attachment. The armrest attachment may vary, provided:

(1) The variation does not extend into the seat back/seat belt load path.

(2) The variation does not affect any area of potential ATD head contact from an occupant in the seat behind.

(3) It can be shown by rational analysis that the retention of the armrest is not significantly affected.

Variations to parts of the spreader that are in the primary load path (between the seat back attachments and the lateral beams or legs) are acceptable, provided it can be shown by rational analysis that the strength (compression/bending) is equivalent to or less critical than the tested seat.

c. Variations and post certification changes requiring additional tests. An additional 16g longitudinal structural test is required beyond the baseline testing for any seat with variations to parts of the spreader that are in the primary load path (between the seat belt attachments and lateral beams or legs).

An additional row-to-row HIC test may be required, if variations to the spreader in any seat are within the ATD head contact area from an occupant in the seat behind or if it changes the seat back performance with regard to HIC.

APPENDIX 3. SEAT FAMILY DEFINITION (CONTINUED)

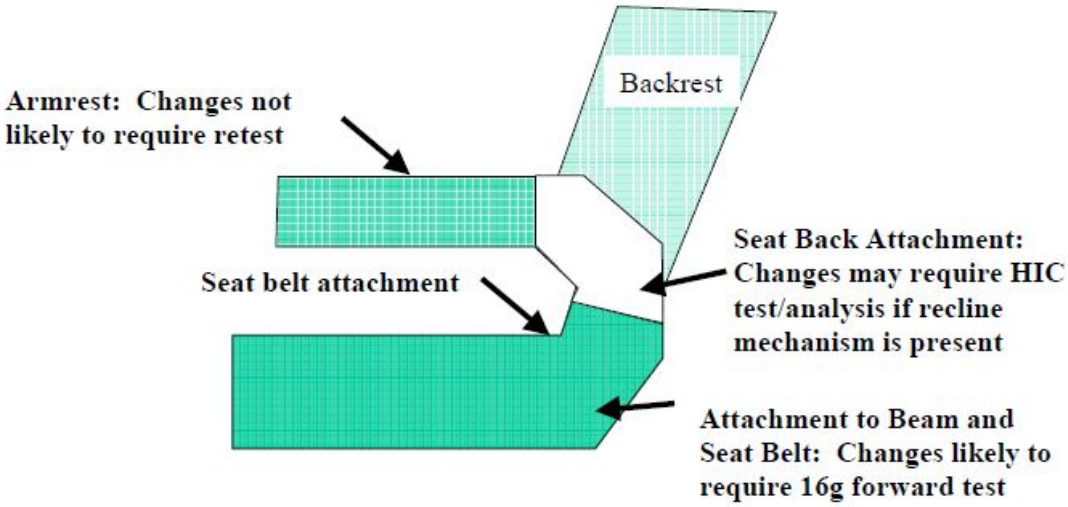

Changes to Spreaders Bars

Figure A3-3

9. Bottom Cushion.

a. Family of seat principles. The bottom cushion is the component that the occupant sits directly upon. The primary considerations for this component regarding variations/changes are the effect upon lumbar load and the positioning of the occupant in the seat place. Occupant position is assessed using the Seat Reference Point (SRP), as defined in AS8049 Revision A or later. Variations in SRP dimensions discussed in this document are in the component X, Y, and Z directions (the XYZ resultant change is not considered). The bottom cushion assembly (for example, the foam sandwich) must have the same material (that is, the same density, material, and manufacturing process), must be either molded or fabricated within a family, and must be similar in contour and thickness.

b. Variations and post certification changes acceptable by analysis. Contour variations are acceptable without additional 16g and 14g structural tests, provided the SRP does not vary by more than 0.75 inch in any direction (that is, fore, aft, inboard, outboard, up or down) from the SRP of the tested seat. This 0.75 inch variation recognizes the inherent 0.25 inch tolerance in the SRP measurement in addition to an allowable design change of 0.5 inch. Experience has shown that geometry variations in an area 3 inches forward, 2 inches rearward, and 2 inches sideward of each buttock reference point have the most influence on the SRP. Areas of the cushion outside this zone have little influence on ATD performance.

APPENDIX 3. SEAT FAMILY DEFINITION (CONTINUED)

Variations in seat cover fabric are acceptable without additional analysis, provided the variations do not significantly affect the SRP location.

c. Variations and post certification changes requiring additional tests.

(1) Any variation in the cushion contour in an area 3 inches forward, 2 inches rearward and 2 inches sideward of the buttock reference point of the previously tested cushion that results in a vertical change to the SRP of greater than ½ inch would require a 14g vertical lumbar load test.

(2) Variation in bottom cushion material (excluding fabric and common fire-blocking material) would require a 14g vertical lumbar load test and a 16g longitudinal head path test, if one was included in the baseline testing.

(3) Variation in cushion contour that moves the SRP location more than 0.75 inches up would require a 16g longitudinal structural test.

(4) Variation in cushion contour that moves the SRP location more than 0.75 inches in any direction would require a 16g longitudinal head path test, if one was included in the baseline testing.

10. Bottom Cushion Support.

a. Family of seat principles. The bottom cushion support (for example, seat pan or diaphragm) is the structure immediately below the bottom cushion supporting the occupant weight. The primary considerations for this component regarding variations are the effect on structural performance, lumbar load performance in a 14g vertical test, and the positioning of the occupant in the seat place. The bottom cushion supports at all seat place locations must have the same materials, manufacturing processes, and construction method, and they must be similar in geometry and method of attachment, except as noted in paragraph b below.

b. Variations and post certification changes acceptable by analysis.

(1) Variations to the seat bottom cushion support geometry and method of attachment are acceptable without additional test(s), provided it can be shown by rational analysis, based on test data, that:

(a) The variations have no significant influence in increasing lumbar compression load (including deflection such that contact occurs with any item beneath),

(b) The strength is equivalent to or less critical than the tested seat.

APPENDIX 3. SEAT FAMILY DEFINITION (CONTINUED)

(2) The following variations are acceptable without additional tests:

(a) Variations in the bottom cushion support geometry to accommodate small difference in the seat place width (3 inches or less), provided other aspects of the geometry and the method of attachment do not vary.

(b) Variations in the bottom cushion support geometry having an influence on SRP location, provided the SRP does not vary by more than 0.5 inch in any direction (fore, inboard, outboard, or up) from the SRP of the tested seat. In general, if all other features of a seat remain constant, head excursion with respect to the seat is shorter when the SRP moves aft. Similarly, structural loads due to overturning moments decrease as SRP is lowered. These general trends can be examined to eliminate duplication of some tests.

c. Variations and post certification changes requiring additional tests. Tests are required for any seat with a variation in seat bottom cushion support material or construction method from the tested seat.

(1) Tests are required for any seat with a variation in seat bottom cushion support that has significant influence on lumbar load (including deflection such that contact occurs with any item beneath) or that is determined to be more critical with regard to strength than the tested seat.

(2) If a variation in the seat bottom cushion support varies the SRP more than 0.5 inches in any direction from the tested seat, the following tests or analysis must be performed:

- A 14g lumbar load test
- 16g longitudinal structural test, if the SRP moves upward.
- 16g longitudinal head path analysis (if one is included in the baseline testing). This analysis would graphically modify the head path collected in previous tests to account for the change in SRP.
- A row-to-row HIC analysis, if the SRP moves up or forward more than 0.5 inches. This analysis may result in an additional HIC test or a modification of the installation limitations for the seat family. If the SRP moves down or aft, graphical analysis of the data collected in previous testing should be used to determine, if the head might strike a different object.

APPENDIX 3. SEAT FAMILY DEFINITION (CONTINUED)

NOTE: The SRP location may be assumed to change directly as a result of any modification to the structural geometry in the seat bottom cushion support. That is, the SRP moves by the same amount that the bottom cushion support moves. Therefore, no SRP measurements are required in determining the "new" SRP.

11. Seatbelts and Anchors.

a. Family of seat principles. The seat belts (occupant restraints) provide the load path from the occupant to the seat structure. The seat belt typically consists of a latching mechanism, a belt anchor (which connects the belt to the seat) and webbing (which links the latch mechanism with the belt anchors). The latching mechanism must have the same materials, manufacturing processes, construction method, and means of webbing retention; it must also be similar in geometry. The belt anchors must have the same materials, manufacturing processes, and construction method; they must also be similar in geometry. The webbing must have the same material, manufacturing process, construction method, and geometry. The stitching used to attach restraint system hardware to the webbing must be identical to the tested seats. In general the same principles apply to upper torso restraints and lapbelts.

(1) To date, there are no standards for seat belts that are sufficient to reduce or eliminate full-scale testing when they are substituted on a seat family. At this time, one or more full-scale dynamic tests would be required to substantiate a seat belt replacement. Certain changes may be substantiated using comparative testing on rigid seats, provided the loads are not increased and head path data are not necessary.

(2) The quality and workmanship of the restraint system must be consistent with TSO/JTSO C22 or TSO/JTSO C114 or equivalent.

(3) The seat belt anchor provides the load path between the belt anchor (part of the belt assembly) and the seat structure (for example, spreader). The seat belt anchor at similar locations within the seat assemblies must utilize the same materials and manufacturing processes, must exhibit similar geometry, and must employ similar methods of attachment.

(4) Once a belt system is qualified for a specific seat family, it can replace other qualified belt systems on that same seat family. To qualify a new belt on an existing family, one 16g structural test seat with highest loaded leg (pitch and roll) must be performed. This structural substantiation is sufficient to allow use of the new belt on the seat family. The ATD head path must be compared for the seat with the new belt system and with the old belt system. This may be done on either the structural test noted above or an additional 16g forward head path test, depending on what data is available for comparison with the old belt system.

APPENDIX 3. SEAT FAMILY DEFINITION (CONTINUED)

(a) If the head excursion along the entire path for the new belt system is equal to or less than the old belt system, no additional substantiation is required.

(b) If the head excursion along the entire path for the new belt system is greater than the old belt system, the installation limitations may need to be modified to account for this difference.

(5) If multiple belts are a part of an existing seat family and a seat component is changed in the family that will require additional testing, it is not necessary to retest with every seat/belt combination. Floor reaction loads for the 16g structural tests for each belt may be used in selecting a single belt for use on testing future changes to the seat family. This would cover all belts previously qualified using the same webbing material (for example, nylon or polyester webbing). The belt used for this follow-on testing would be the one associated with the highest floor reactions.

> **NOTE:** If any test using the new seat component generates significantly higher floor reaction loads (load increases on the order of 10 percent or more) compared to the test without the new seat component, the belts that were not tested must be addressed to ensure they have sufficient strength. A plan outlining additional test and/or analysis of the non-tested belts must be reviewed with the appropriate regulatory agency.

b. Variations and post certification changes acceptable by analysis.

(1) Variations to the seat belt anchor or latching mechanism are acceptable without additional tests, provided it can be shown by rational analysis that:

- The variation does not affect the means of webbing retention, and
- The strength and stiffness are equivalent to or less critical than the tested seat.

(2) Variations to webbing color, belt anchor finish, part labeling, connector/buckle "handedness," latch handle disengagement angle, and adjustable-sidewebbing length are acceptable without additional analysis.

(3) Variations of the fixed length of the restraint system are acceptable as follows:

- The adjuster mechanism moves closer to the centerline of a 50th percentile ATD from the previously tested position (Unless the original position of the adjuster was at the extreme side of the occupant (i.e., at the anchorage point)).

APPENDIX 3. SEAT FAMILY DEFINITION (CONTINUED)

- The adjuster mechanism moves to within ±1.5 inches of the centerline of a 50th percentile ATD.

c. Variations and post certification changes requiring additional tests. An additional test(s) must be conducted for any of the following variations, if it is determined to be more critical with regard to the component's performance in the dynamic test compared to the tested seat:

- Changes in anchor geometry and method of attachment would require substantiation by test. Some changes to the seat belt anchor may be acceptable without test (e.g., changing a bolt to one with higher strength).
- Latching mechanism material.
- Manufacturing process.
- Construction method.
- Stitch Pattern.

An additional test(s) must be performed for any seat with a seat belt anchor that has a variation in material, manufacturing process, or construction method from the tested seat(s), unless substantiated by analysis (above).

APPENDIX 3. SEAT FAMILY DEFINITION (CONTINUED)

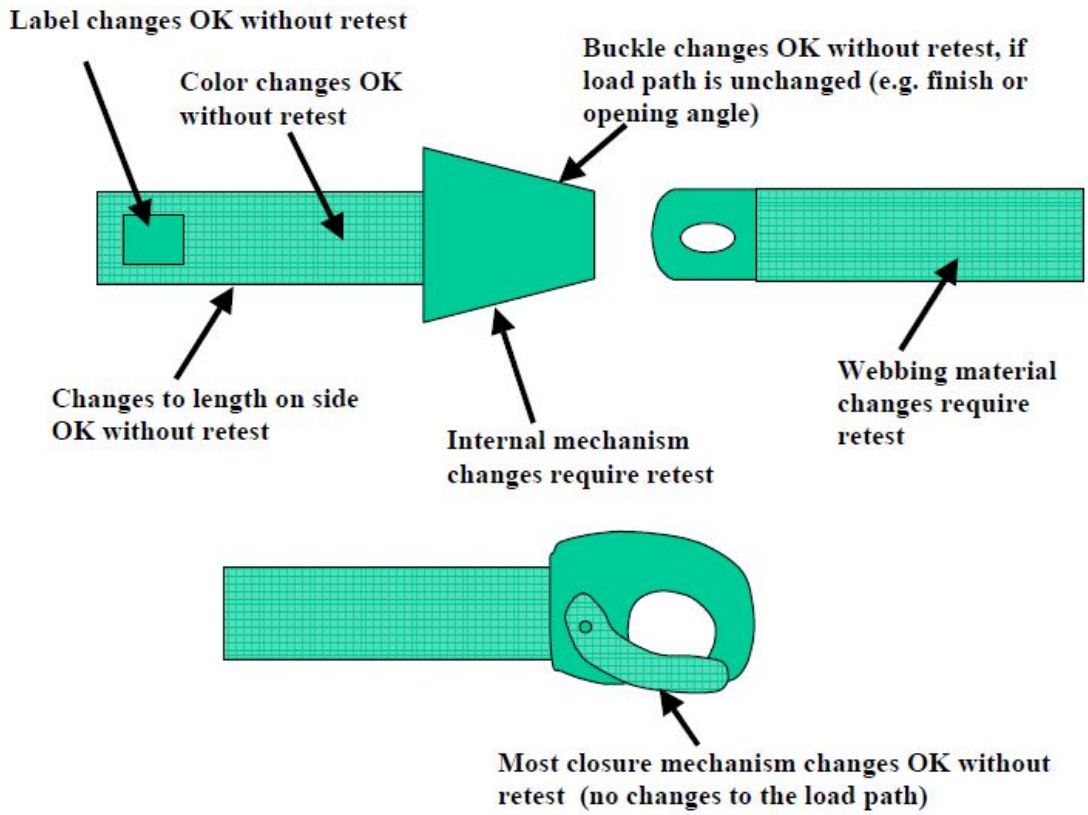

Figure A3-4
Seat Belts

12. Attachments between Structural Members.

a. Family of seat principles. Fittings and fasteners provide the primary load path between structural components. These include, but are not limited to, the connection method of the spreader-to-beam attachment, beam-to-leg attachment, and leg-to-track fitting attachment. In general, these attachments should reflect a similar design philosophy at similar locations within the seat assemblies (for example, the attachment method between the lateral beams and the seat legs should be consistent between seat assemblies).

APPENDIX 3. SEAT FAMILY DEFINITION (CONTINUED)

b. Variations and post certification changes acceptable by analysis. Variations to the attachments between structural members due to space or geometry limitations are acceptable without additional tests provided:

- The attachment has the same design philosophy, and
- It can be shown by rational analysis that the strength and stiffness are equivalent to or less critical than the tested seat.

c. Variations and post certification changes requiring additional tests. An additional test(s) must be conducted for any seat with an attachment that reflects a different design philosophy (for example, a beam-to-leg attachment with a spreader clamp design versus a saddle design) from the seat included in the baseline testing.

(1) An additional test(s) must be conducted for any seat with an attachment that reflects the same design philosophy but is determined to be structurally more critical than the attachment between structural members of a similar seat included in the baseline testing.

(2) A single 16g longitudinal or 14g vertical test is sufficient to substantiate the attachment between structural members with a different design philosophy or variations within the same design philosophy, provided it can be determined which test condition is critical for that attachment.

13. Seat Track Fittings.

a. Family of seat principles. Seat track fittings are critical components in the primary load path. The seat track fitting provides the load path between the seat primary structure (for example, leg or beam) and the airplane structure (for example, seat track). Seat track fittings must have the same load path and similar design philosophy.

b. Variations and post certification changes acceptable by analysis.

(1) Variations to the seat track fitting locking mechanism engagement or adjustment device (screw, bolt, etc.) are acceptable without additional analysis, provided it is not part of the load path or does not change the load path (for example, by altering stud engagement).

(2) Variations in seat track fitting finish are acceptable without additional analysis, provided the method of finish application does not affect the strength of the part.

APPENDIX 3. SEAT FAMILY DEFINITION (CONTINUED)

c. Variations and post certification changes requiring additional tests. Variations in seat track fitting geometry or method of attachment must be substantiated by test(s). An additional test(s) must be performed for any seat with a seat track fitting that has a variation in load path, material, manufacturing process, or construction method from the tested seat(s).

14. Energy Absorbers in Seat Leg Structures.

a. Family of seat principles.

(1) Energy absorbers (EA devices) are typically incorporated in the seat leg structure to control occupant or structural loads. Within a family, energy absorbers must share a consistent design. While the incorporation of energy-absorbing features is encouraged, the criticality assessment is not as straightforward as for other parts of the primary load path.

(2) If all seat leg/EA combinations are identical, the normal seat dynamic test program that tests the structurally critical seat will also substantiate all the seat leg/EA combinations in this case. No additional tests are required.

b. Variations and post certification changes acceptable by analysis.

(1) When the seat leg structures are identical at all locations, but different rated EAs are at some seat leg locations (the EAs use the same design philosophy, and the EAs end attachments are identical), the leg structure must be substantiated for the highest load and the stroke of each EA device must be substantiated as follows:

(a) Substantiation of the leg structure and attachment. The normal seat dynamic test program that considers the structurally critical seat will also substantiate all the seat leg/EA combinations if none of the EAs stroke or if only the highest rated EA strokes. Either of these test results will ensure that the highest seat/floor interface loads were developed.

(b) Substantiation of the EA stroke. In general, a lower-rated EA device should not “bottom-out,” unless the highest rated EA also “bottoms-out.” In any event, additional tests may be required to test the lower-rated EA device(s) to establish the highest seat/floor interface load for that device, should any EA other than the highest-rated EA “bottom-out” during the test.

(2) In all cases, additional tests must be performed critically testing the lower-rated EA devices, or the supplier must work with the appropriate regulatory agency to develop a validated predictive model for the EA devices in order to provide an adequate rational analysis in order to avoid additional tests.

APPENDIX 3. SEAT FAMILY DEFINITION (CONTINUED)

(3) The following steps outline the considerations to be used in performing a predictive rational analysis used to substantiate seat legs with different rated EA devices. This analysis should be successfully completed prior to conducting dynamic tests in order to demonstrate that there is adequate testing of the energy-absorbing system and the affected seat structure:

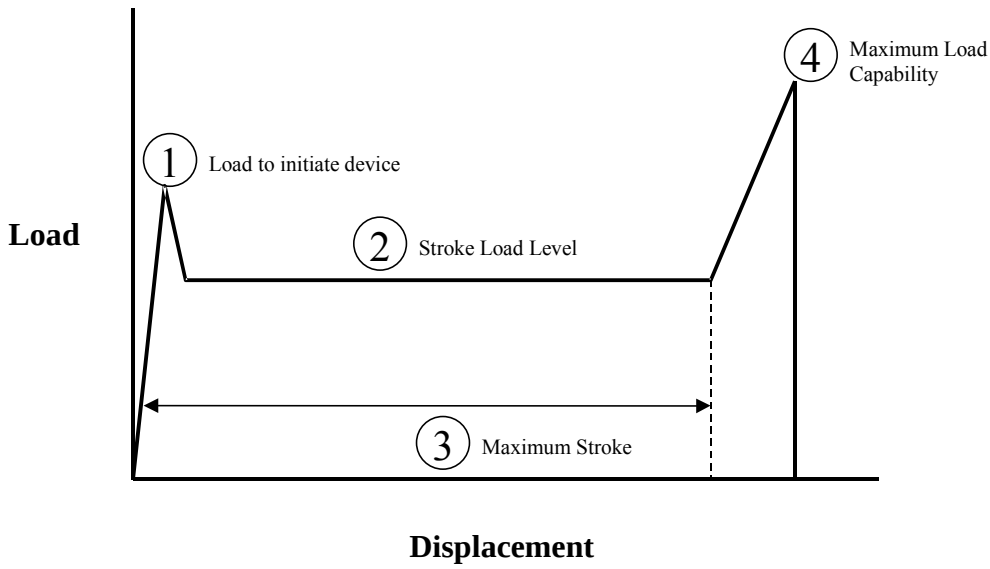

Figure A3-5

- The fundamental performance should be characterized in terms of the maximum load capability, the load to initiate the EA device, the stroking load level, and the amount of stroke/deformation available. These parameters all need to be determined.

- Using the static interface loads and knowledge of the EA characteristics, the expected stroking load level and stroke length should be predicted.

- The analytical predictions and the results of the dynamic test should be correlated to ensure that during the dynamic test all EAs have performed as designed.

- It should be demonstrated that none of the seat/EA combinations would bottom out under their maximum load case.

APPENDIX 3. SEAT FAMILY DEFINITION (CONTINUED)

NOTE: EA variations that do not affect the fundamental performance or make the stroke/deformation of the EA more critical may be allowed without retest.

c. Variations and post certification changes requiring retest. If a seat assembly has different leg structure and different rated EAs at some locations, each seat leg/EA combination must be demonstrated by tests to produce the maximum seat/floor interface load for each individual seat leg/EA combination. This is necessary to ensure that the maximum seat leg/EA load is developed for each combination and that adequate stroke is available at each individual EA.

15. Seat backs.

a. Family of seat principles. The seat back supports the occupant's torso in the seated position. It is the component of the seat that is typically forward of an occupant in a row-to-row HIC situation (forward facing seats) and is the component of the seat that provides the load path to the lower seat structure in aft-facing installations. The permanent deformation of seat backs can be a significant consideration for the occupant egress of the airplane. The primary considerations for this component regarding variations/ are the effects on seat back position/angle and occupant positioning (which may affect HIC or lumbar load), the effect on structural performance, and seat back permanent deformation.

(1) The components installed on the seat back (for example, food tray tables, video monitors and telephones) must be represented when evaluating variations as well as the recline mechanism, breakover devices, seat back energy-absorbers, and seat back attachment hardware.

(2) The seat back structural components and attachment hardware must have the same materials, manufacturing processes, and construction method, and they must be similar in geometry.

(3) The seat back energy-absorbers must be the same for all seat backs for all seats that are subject to the HIC criteria.

(4) The seat back breakover must be the same for all seat backs for all seats that are subject to the HIC criteria.

(5) When a load is applied to the seat back in the upright position, the load path within the recline mechanism from the seat back to the seat structure must be the same for all seat backs that are subject to the HIC criteria.

(6) Seat backs should be interchangeable between most families, if the seat back accessories, back structure, and method of attachment perform the same.

APPENDIX 3. SEAT FAMILY DEFINITION (CONTINUED)

(7) Once substantiated for HIC, seat backs can be arranged independently in the airplane, provided the installation limitations of the new arrangement result in comparable conditions to those under which the target seat was tested (simple analysis demonstrates that no new head strike features are in the head strike zone). For example, once the business class seats pass the HIC testing, they can be installed in the airplane with an economy class seat behind without further substantiation. Exceptions include pairing with a seat with very unusual performance, for example, very large deformation or substantial energy-absorption.

b. Variations and post certification changes acceptable by analysis. Variations to components installed on the seat back are acceptable without additional test(s), provided the test article selection process in paragraph 5 of this AC (considering the component variance) shows the seat selected for the row-to-row HIC tests is the seat that was tested.

(1) Variations to the attachment method of components installed on the seat back are acceptable without additional test(s) as follows:

(a) For retention, it can be shown by rational analysis that the strength is equivalent to or less critical than the tested seat(s), and

(b) This does not replace the test discussed in paragraph 5 of this AC for row-to-row HIC

(2) Variations to the seat back, excluding potential head contact areas, that do not significantly affect the mass/weight, center of gravity, or load path stiffness of the seat back (for example, cushion trim or dress cover) are acceptable without additional analysis.

(3) Variations of the seat back structure width up to 2 inches are allowed without additional test, as long as these variations in seat width do not introduce new structure in the target head strike area. Variations greater than 2 inches may require additional test(s) for HIC and B/C deformation.

(4) Variations in the seat back upright position of ±3 degrees are acceptable, provided it can be shown that the variation has no influence on occupant egress from the airplane when evaluated using the seat permanent deformation data from the baseline tests. For example, applying the seat permanent deformations from the baseline tests to the "new" seat back upright position still meets the guidance given in Appendix 2 for occupant egress, including 'B' vs. 'C'. Additional variations in the upright position are acceptable with analysis that the variations do not influence HIC or egress for either the person in the seat or the person behind the seat.

(5) Variations to backrest cushion hardness and contour are acceptable, provided the SRP does not vary by more than 0.75 inch from the SRP of the tested seat.

APPENDIX 3. SEAT FAMILY DEFINITION (CONTINUED)

(6) Variations to any part of the recline mechanism that do not provide a load path from the seat back to the seat structure are acceptable without additional analysis.

c. Variations and post certification changes requiring retest. Variations in the seat back structure materials, manufacturing processes, or construction method from the tested seat(s) may require retest.

(1) A HIC test(s) may be necessary for any seat with a seat back subject to the HIC criteria that has a variation in an installed component. Use the test article selection process in ¶ paragraph 5of this AC to determine whether the component variance must also be tested.

(2) A test(s) must be performed for the following seats, if they are required to meet the HIC criteria:

(a) Any seat with a seat back that has a variation in the attachment method of an installed component that has been determined to be more critical than the tested seat(s).

(b) Variations in the seat back attachment method which the test article selection process in paragraph 5 of this AC shows must be tested in addition to previously tested seat(s).

(c) Variation in the seat back energy absorber from the tested seat(s).

(d) Variation in the seat back breakover from the tested seat.

(e) Variation to any part of the recline mechanism that provides a load path from the seat back to the seat structure from the tested seat. If a part of the recline mechanism is not considered critical in the HIC load path, variations that do not lower the strength of the load path are acceptable without test. For example, the recline mechanism can be replaced with a “solid rod,” because other components in the HIC load path absorb the energy of a seat back head strike.

(f) Variation in backrest cushion hardness or contour that changes the SRP location more than 0.75 inch in any direction from the seat back to the seat structure from the tested seat.

(g) Variation in the seat back upright position of greater than ±3 degrees from the seat back to the seat structure from the tested seat, unless an acceptable analysis is provided per paragraph b. above.

APPENDIX 3. SEAT FAMILY DEFINITION (CONTINUED)

16. Seat Weight.

a. Family of seat principles. The seat weight has a significant influence on the seat performance during the structural tests. Small weight variations are acceptable, but large increases must be substantiated by test. These variations are accounted for in the critical test case evaluation by interface load comparison. Proper planning of test article definition and testing can make accommodation of future seat weight growth. This can be accomplished by adding ballast to the test article.

b. Variations and post certification changes acceptable by analysis.

(1) An increase in the weight of a seat that was included in the baseline testing is acceptable without additional test or analysis, provided the increase is not greater than 3 percent of the total unoccupied tested seat system weight.

(2) An increase in the weight of a seat that was not included in the baseline testing (that is, a seat that was not tested per the test article selection process) is acceptable provided:

(a) The test article selection process in paragraph 5 of this AC using a seat interface load analysis with the increased seat weight shows the seat(s) selected for the structural tests to still be the tested seat(s).

(b) If the weight increase to any seat is due to adding a specific item to a specific location on the seat, see Appendix 5 of this AC for guidance on the method of substantiation

(c) Depending on the location of the added component, testing of the component in question may be conducted on a partial or unoccupied seat. These types of tests should be coordinated in advance with the appropriate regulatory agency.

(d) Testing must have substantiated HIC, if ATD head contact with the added item is possible.

(e) Testing must have substantiated lumbar load, if ATD contact with the added item is possible.

c. Variations and post certification changes requiring additional tests. An additional test must be added to the baseline testing for any seat that was included in the baseline testing with a weight increase greater than 3% of the unoccupied tested system seat weight.

APPENDIX 3. SEAT FAMILY DEFINITION (CONTINUED)

(1) An additional test(s) must be performed for any seat that was not included in the baseline testing with a weight increase, if the test article selection process in paragraph 5 of this AC, using a seat interface load analysis with the increased seat weight, determines that this seat should be selected for testing.

(2) An additional test(s) must be performed for any seat with a weight increase due to adding a specific item to a specific location that was not substantiated in the baseline testing for HIC, or lumbar load (as appropriate).

NOTE: See Appendix 5 for discussion of acceptable methods of substantiation for retention of an item of mass on the seat.

17. Armrests.

a. Families of seat principles. Armrests are the seat structures that retain the occupant's sides. They are not required features on a seat, and many passenger places can have armrests on one or both sides of the passenger stowed (folded up). The primary considerations for this component regarding variations or changes are the effect on retention of the component, HIC (head contact on the aft part of the armrest from occupant seated behind), occupant egress of the airplane (seat permanent deformations), and positioning of the occupant in the seat place.

b. Variations and post certification changes acceptable by analysis. Variations to armrests are allowed provided:

(1) It can be shown by rational analysis that the variations have no influence on the ATD dynamic response.

(2) It can be shown by rational analysis that the variations have no influence on occupant egress from the airplane when evaluated using the seat permanent deformation data from the baseline tests (see AC 25.562-1A).

(3) The test article selection process in Section 4.0, considering the seat with the armrest geometry variance, show the seat(s) selected for the row-to-row HIC tests have been tested.

(4) Variations to the armrest attachment can be shown by rational analysis that the strength is equivalent to or less critical than the tested seat(s).

c. Variations and post certification changes requiring additional tests. Variations to armrests that are in a potential occupant head-strike location should be substantiated by test or analysis.

APPENDIX 3. SEAT FAMILY DEFINITION (CONTINUED)

(1) An additional test(s) must be added for any seat that has an armrest that has a variation in attachment method that is determined to be more critical with regard to strength than the seat(s) included in the baseline testing.

(2) An additional test(s) may be required, if changes to the armrests influence the ATD response to lumbar loads. For example, if the seat geometry forces the ATD's arms over the armrests during a test and a post-test modification to the armrest would significantly change the ATD response, an additional test may be required.

(3) An additional row-to-row HIC test may be required , if geometry or material variations to the armrest in any seat are within the ATD head contact area from an occupant in the seat behind.

APPENDIX 4. PROCEDURE FOR DEMONSTRATING COMPLIANCE WITH HIC FOR REPETITIVE SEAT ROWS

1. In an effort to reduce the regulatory burden and clarify the procedure for demonstrating compliance, the following procedure has been developed. In the majority of cases, this procedure should allow demonstration of compliance for HIC with two tests. The procedure takes into account seat pitch, the relative position of the seat and the row behind it, and the range of occupant seated heights (5th percentile female to 95th percentile male). The intent of this procedure is to provide default conditions that can be used in lieu of conducting several tests or performing lengthy analytical studies. Observe that seats that have homogenous impact surfaces (for example, those with a shell or integral partition) may require only one HIC test. For installations that incorporate airbags or upper torso restraints, a similar approach could be used provided that the applicant conducts a specific analysis for two basic contact areas to assess HIC. Specific attention should be given to the range of occupants required for airbags.

a. For Each Family of Seats:

(1) Identify the intended seat installation configurations from a seat-to-seat HIC perspective. This will typically include seats in parallel or repetitive rows but may also include other factors, such as:

(a) Seats on canted seat tracks, such that the seats are parallel to each other, but are at an angle with respect to the airplane's longitudinal axis.

(b) Seats on laterally staggered seat tracks, such that the seat places, row-to-row, are staggered.

(c) Non-parallel seat rows.

(d) Laterally staggered seating due to a change in the number of seat places.

(e) Different width seats that result in the seat places, row-to-row, being slightly staggered.

(2) Identify the range of intended seat-to-seat pitch.

NOTE: For non-parallel seat installations (e.g., at the seat track break between the airplane constant and tapered sections) the SRP-to-SRP distance at the center of the seat place will be used as the seat pitch to determine minimum and maximum pitch when utilizing this test article selection procedure. All seat places (inboard to outboard) in the seat must be considered when determining the minimum and maximum seat pitch. Additional, unique seat pitches may be considered by choice.

(3) For two of the same part number seats in the family, installed parallel to each other:

APPENDIX 4. PROCEDURE FOR DEMONSTRATING COMPLIANCE WITH HIC FOR REPETITIVE SEAT ROWS (CONTINUED)

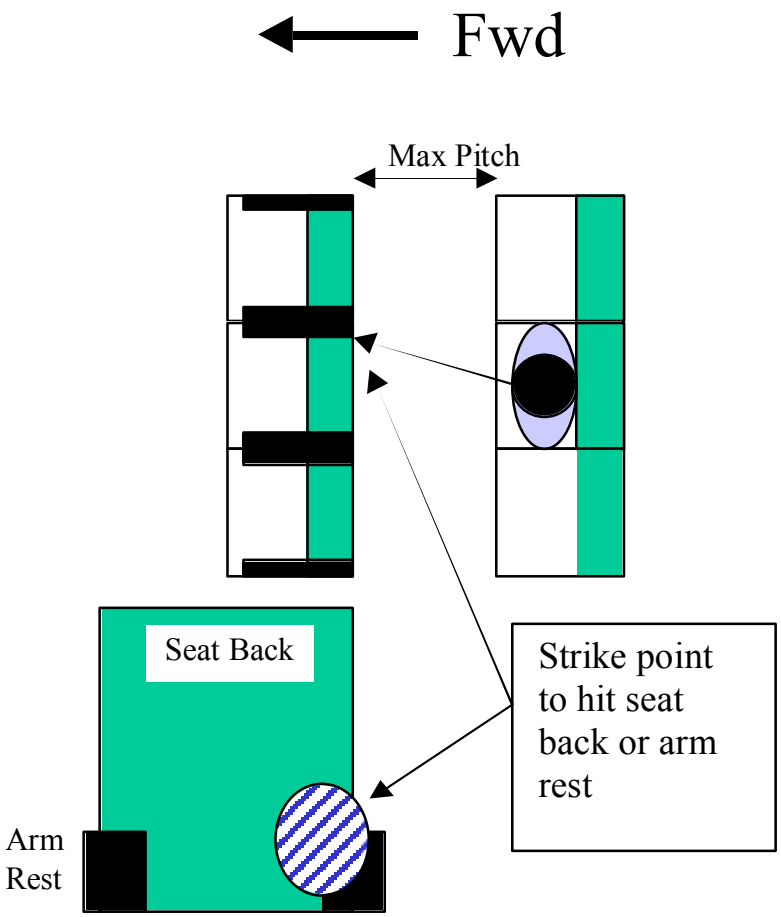

Figure A4-1

(a) Determine the maximum seat pitch (within the range identified in step 1(a)(2))) and the yaw angle (within the ±10 degrees envelope plus additional seat installation angle per step 1(a)(1)(a), if required) at which the 50% male ATD head impacts (i.e., solid strike, not glancing blow) the lower portion of the seat back structure and/or the armrest structure. In most cases, the additional aircraft installation angle is not additive to both the plus and minus yaw angle (for example, the analysis for an aircraft installation angle may be +10 degrees and –14 degrees).

(b) Conduct a test of the seat pitch and yaw angle per paragraph (a) of this paragraph with the yaw direction, such that the ATD head strikes the side of the seat with the seat recline mechanism (Zone A test).

APPENDIX 4. PROCEDURE FOR DEMONSTRATING COMPLIANCE WITH HIC FOR REPETITIVE SEAT ROWS (CONTINUED)

(c) Conduct a test of the seat pitch and yaw angle per paragraph (a) of this paragraph) with the yaw direction, such that the ATD head strikes the side of the seat without the seat recline mechanism (Zone B test).

NOTE: It is common for the recline mechanism to be positioned on the left side of some seat backs and the right side of other seat backs of the same assembly. Therefore, the seat-to-seat HIC test for Zone A and Zone B can usually be accomplished in one two row test using two instrumented ATD's with the yaw direction set to effect a head strike in Zone A by one ATD and Zone B by the other ATD. Alternatively, it may be possible to relocate one recline mechanism for test purposes. If this method is chosen, care should be taken to not alter the basic design. The intent of this procedure is to create a mirror image of the actual part, to simplify testing.

(4) For the same seats identified in paragraph (3) above, installed parallel to each other:

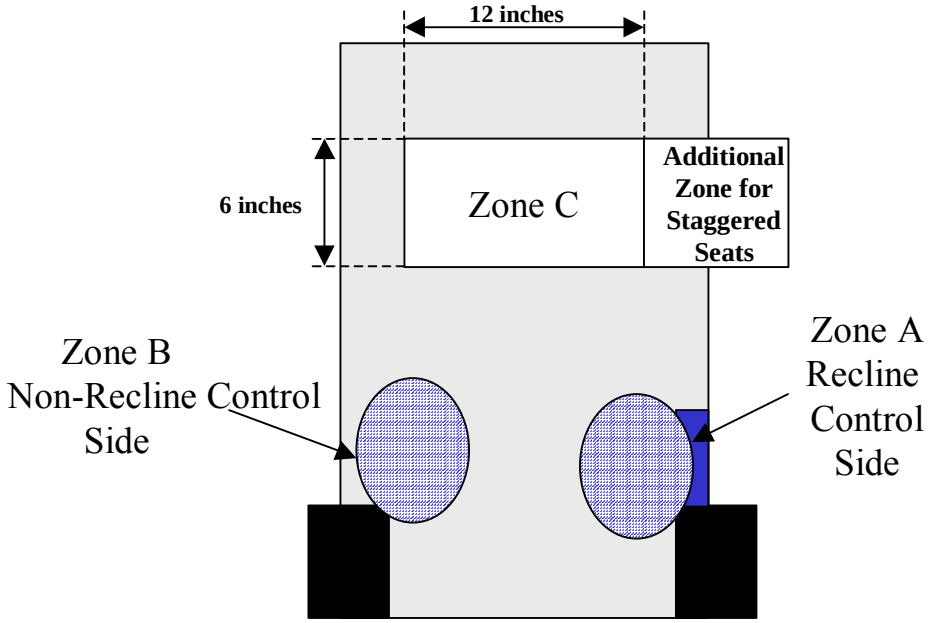

Figure A4-2

APPENDIX 4. PROCEDURE FOR DEMONSTRATING COMPLIANCE WITH HIC FOR REPETITIVE SEAT ROWS (CONTINUED)

(a) Determine the point of initial head contact by the 50% male ATD at the minimum pitch identified in paragraph 1a(2) and at 0 degrees yaw angle. If the 50% male ATD head path does not contact the seat forward, move the seats 3 inches closer together and locate the initial head contact using the 50% ATD head path. If, after moving the seats closer, there is still no contact with the 50% ATD head path, a row-to-row HIC test is not required.

(b) Evaluate the area defined by a 6-inch high by 12-inch wide rectangle centered on the initial head contact point for structures that differ significantly from the initial contact point (that is, telephone handsets, video screens, and oxygen mask container units) such that the seatback is not homogeneous.

(c) Determine which structure in the 6-inch by 12-inch rectangle is the most rigid in the direction perpendicular to the aft seat back structure.

(d) Conduct a test designed to produce ATD head contact with the structure identified in paragraph (c) above (Zone C test).

> **NOTE**: Typically, the Zone C test will be conducted at the minimum seat pitch and 0 degrees yaw. However, when the area of concern (as identified in paragraph (c) above) is not at the center of the 6 inch by 12 inch rectangle, the relative position of the seats in the two row set up must be adjusted to produce the ATD head contact desired. Lateral offset or vertical adjustment of the seats' relative position will ensure that a comparable head impact velocity as that measured from the normal position Zone C test is achieved. Other methods that achieve the same objective are acceptable.

(5) For seats installed at an angle with respect to the airplane's longitudinal axis—parallel rows or non-parallel rows (for example, the rows in the tapered section of the airplane):

APPENDIX 4. PROCEDURE FOR DEMONSTRATING COMPLIANCE WITH HIC FOR REPETITIVE SEAT ROWS (CONTINUED)

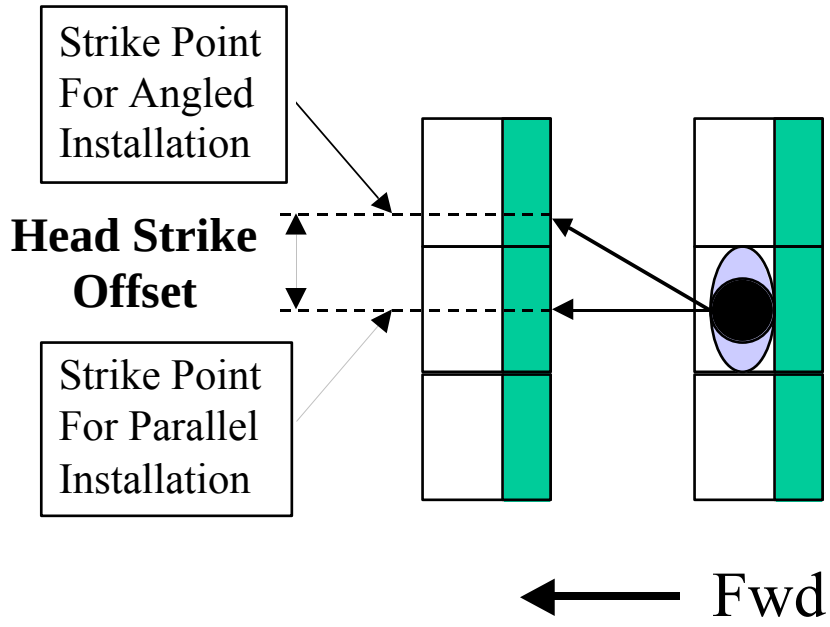

Figure A4-3

(a) Determine the head strike location of the 50th percentile male ATD for the seats in the yawed installation configuration (inertia load direction parallel to the airplane's longitudinal axis) using the path of the top of the ATD head.

(b) Determine the head strike location of the 50th percentile male ATD for the same seats in a 0 degrees yaw; parallel row installation configuration at the same seat-to-seat pitch as the yawed installation configuration.

(c) Calculate the "head strike" offset—the lateral distance between the two contact points determined in paragraphs (a) and (b) above, measured on a plane perpendicular to the airplane's longitudinal axis.

(d) If the cumulative offset between the staggered seats plus offset due to the installation angle is 6.0 inches or less, the additional seat angle may be neglected for the row-to-row HIC tests.

APPENDIX 4. PROCEDURE FOR DEMONSTRATING COMPLIANCE WITH HIC FOR REPETITIVE SEAT ROWS (CONTINUED)

(e) If the cumulative offset between the staggered seats plus the offset due to the installation angle is greater than 6.0 inches, the additional seat angle must be included in the evaluation identified in paragraph (3)(a) above and included in the test setup, as necessary.

(6) For seats which have staggered seat places, row-to-row:

NOTE: Staggered seating can result from a change in the number of seat places, different width seat assemblies, or installation on staggered seat tracks to accommodate the airplane taper section.

(a) If the row-to-row seat place is staggered and the cumulative offset between the staggered seats plus the offset due to the installation angle is 6.0 inches or less, the lateral offset between the seat places may be neglected and the row-to-row HIC tests identified above may be conducted without including the lateral offset.

(b) If the row-to-row seat place is staggered more than 6.0 inches, the actual staggered installation configuration must be considered. This may broaden the Zone C evaluation window defined in paragraph 4b and include more objects to consider for head strike. If a test representative of the actual staggered installation configuration is determined to be required (either in addition to or in lieu of one of the baseline tests identified above), the test set-up (yaw direction and angle and seat pitch) must be that which is determined to be critical for HIC.

NOTE: A staggered seat installation may prove to be the critical HIC evaluation for the airplane installation, if contact with armrests or other hard structure occurs. Such an installation may require testing beyond the Zone A and B evaluations of paragraph 1a(3) of this appendix.

(7) For row-to-row HIC tests:

(a) Since this test is not considered the critical case used to demonstrate compliance to structural criteria, non-production seat tracks may be used (for example, steel track or seat track from a different airplane type).

(b) Any seat or seat place that allows the ATD to strike the intended target area is acceptable.

(c) It is acceptable to conduct the test with no ATDs in the forward seat row. The components attached to the seat back and the structure of the seat back that influence HIC must all be representative of the production seat for all seat backs or armrests that will be contacted by the ATD during the HIC test. This includes the mass and weight of the seat back, breakover mechanism, the structure of the armrest, and

APPENDIX 4. PROCEDURE FOR DEMONSTRATING COMPLIANCE WITH HIC FOR REPETITIVE SEAT ROWS (CONTINUED)

contact area of the armrest. Other components or parts of the seat may be non-representative or deleted from the forward seat.

(d) Weights representing under-seat baggage are not required for either seat row. All components that are part of the occupied seat should be represented, at least, by ballast.

(e) Life vests and weights representing literature pocket contents are not required for either seat row.

(f) A representative floor must be included in the test setup for the ATD's feet.

(8) For each row-to-row HIC test, a post-test evaluation of the high-speed film/video and evaluation of the seat back (for example, chalk mark) must show that the intended ATD head strike was achieved with regard to location and head impact (solid head strike and not a glancing blow). If the intended ATD head strike was not achieved, an adjustment to the test setup and a retest may be required.

2. Collection of ATD Head Path Data to demonstrate no head contact with airplane interior features (usually front-row seats).

NOTE: It is acceptable to collect ATD head path data in the 16g longitudinal structural test.

NOTE: This procedure only selects a test article for the collection of head path data. Additional analysis will be required to assess the specific interior configuration (for example, translating the yawed head path into airplane coordinates and evaluating the airplane interior for potential head strikes using the head path data collected.).

a. For each family of seats

(1) Conduct a 16g longitudinal dynamic test of the seat selected in the 16g longitudinal structural test identified in paragraph 5 of this AC. If more than one seat is identified in paragraph 8 for the 16g longitudinal structural test , select the seat with the greatest overhang to collect head path data. It is acceptable to use the opposite-hand part for this seat.

(2) The occupancy used in the 16g longitudinal structural test must be used for this test.

APPENDIX 4. PROCEDURE FOR DEMONSTRATING COMPLIANCE WITH HIC FOR REPETITIVE SEAT ROWS (CONTINUED)

(3) The test will be conducted with no yaw, no pitch, and no roll. Representative seat track is not required for this test, since structural attachment substantiation is not under consideration (for example, steel tracks may be used on this test).

(4) The head path data of the ATD expected to move the furthest forward due to structural deformation (usually in the most overhung seat place) should be collected. The most overhung seat place is the outer (left or right) seat place with the greatest distance from the centerline of the seat leg to the outer edge of the seat.

> **NOTE**: It is acceptable to conduct additional head path tests of this type on less critical seats or head path data may be collected on more than one ATD on the same seat to collect head path data for specific occupant locations.

> **NOTE**: It is also acceptable to install a bulkhead or rigid vertical wall at the minimum design setback from the bulkhead into the test setup for the purpose of showing no ATD head contact during the test. It is not required for the bulkhead used in the test setup or material to be representative of the production airplane interior component. This is because the test is conducted to establish if head contact occurs for a specific setback distance and the location of head contact by a 50th percentile ATD in those cases where it does. It is the responsibility of the seat installer to use this data to demonstrate an acceptable installation. One way to use this data to demonstrate compliance for front-row HIC is to digitize the head path, then use the data to show no head contact for the range of occupants.

(5) Representative mass for baggage, life vests, and literature pocket contents must be installed at each seat place, regardless of seat occupancy. Items of mass on the seat (for example, under-seat IFE boxes) may be replaced by ballast.

(6) Retention of items of mass need not be demonstrated in this test, and items of mass may be restrained for the test.

(7) A representative floor must be included in the test setup for the ATD's feet.

3. Large Clearance Installations. Installations behind another seat or interior component where the nominal distance between the Seat Reference Point (SRP) and the aft-most point on the seat or interior component is greater than 50 inches do not require dynamic test data to substantiate the HIC criteria. This is based on substantial industry data that demonstrates a seat passing structural criteria will not have a head path that extends beyond 50 inches from SRP.

APPENDIX 5. PROCEDURE FOR SUBSTANTIATING RETENTION OF ITEMS ATTACHED TO SEATS

1. Seats typically consist of components that perform the actual function of occupant restraint and components that are ancillary to that function. In this latter category, equipment may be carried on the seat which could also be installed at other locations in the cabin. For the purposes of substantiating retention, the following categories of items have been established:

a. Items that Affect Dynamic Performance of Seat. These may include deployable items, such as legrests, video arms, food trays and privacy dividers that are part of the seat. The presence or deployment of these items may affect the dynamic response of the seat or passenger egress. Egress can be affected in the way discussed in Appendix 2 or by introducing a tripping hazard. For these items, it is necessary to substantiate the production means of attachment and to assess the potential for deployment using dynamic tests. Figure A5-1 illustrates the principle.

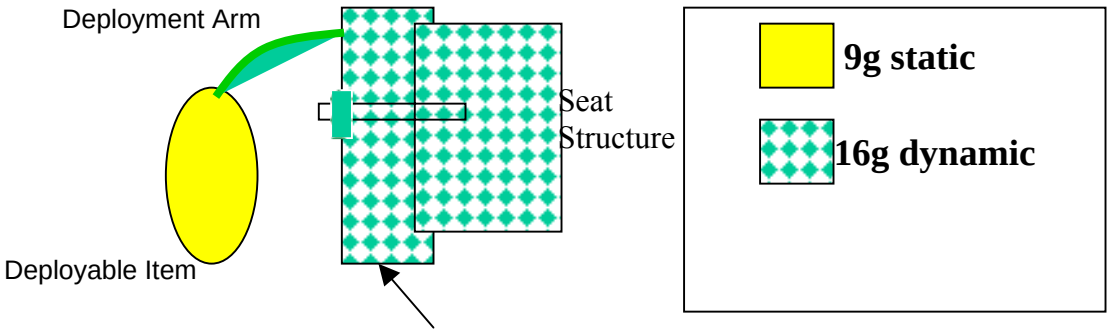

Figure A5-1

(1) Initial certification must be done as part of the dynamic testing (that is, no static alternative). Components that do not influence retention/deployment (for example, the video monitor attached to the video arm) may be dummy units or representative masses.

(2) For substantiating changes after the initial certification, component level dynamic tests may be considered. Also, static comparative analysis to a previously dynamically qualified configuration may be acceptable.

(3) If a component partially deploys during the dynamic test, a load of 10 pounds should be applied along the inertial load path of the test to evaluate the potential for full deployment. The load should then be removed. After the load has been removed, a determination will be made if "normal passenger movement" would move the

APPENDIX 5. PROCEDURE FOR SUBSTANTIATING RETENTION OF ITEMS ATTACHED TO SEATS (CONTINUED)

component out of the way (see Appendix 2). Egress will be evaluated after this consideration has been applied.

(4) As a result of a test failure, a design change may be required. If it is clear that the deployment could be solved by adding additional strength capability to the system while considering the effects of structural deformation during the dynamic event, the revised retention mechanism may be substantiated by a 24g static test or analysis.

b. Items that are Part of Seat But do not Affect Dynamic Performance of Seat
These items include electronic boxes, telephones, game controllers, passenger control units (PCU's), power ports (power plugs), audio jacks, video screens, motors, power control boxes, junction boxes, emergency lighting, cushions, and consoles (armrests) that are not part of the primary structural load path of the seat. These items are typically integrally attached to the seat and not intended to be removed during operation.

(1) These items are considered part of the seat and, therefore, are required to show compliance with § 25.562 for retention. For these items, it is necessary to substantiate the production means of attachment. Compliance may be shown either via dynamic test or, since the dynamic response of the seat is not affected, by static test or analysis. If static substantiation is chosen, a 24g static assessment should performed. The value of the static substantiation has been selected based on past practice and confidence in this method. Figure 2 illustrates the principle.

(2) A 24g static assessment may be utilized for certain in-arm deployable components, such as in-arm monitors and foodtrays, to assess whether these items will remain attached and stowed during the dynamic event. If these items remain stationary on the seat (considering the effects of structural deformation during the dynamic event) and do not deploy under the 24g static load condition, they fall into the category of items that are part of the seat but do not affect the dynamic response of the seat.

(3) Changes to the means of attachment subsequent to the original certification may be substantiated by comparative analysis.

APPENDIX 5. PROCEDURE FOR SUBSTANTIATING RETENTION OF ITEMS ATTACHED TO SEATS (CONTINUED)

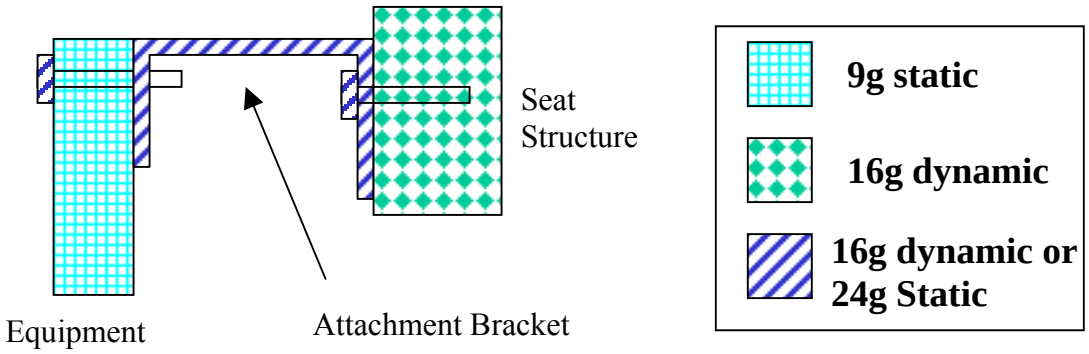

Figure A5-2

c. Operationally Removable Equipment Mounted to Seats. Equipment that is mounted to seats but is intended to be removed from the seat during operation is not considered part of the seat for purposes of establishing restraint. This equipment includes fire extiguishers, oxygen bottles, protective breathing equipment, and flashlights. This equipment would be substantiated for the conditions of § 25.561 and any flight loads. Figure A5-3 illustrates this approach.

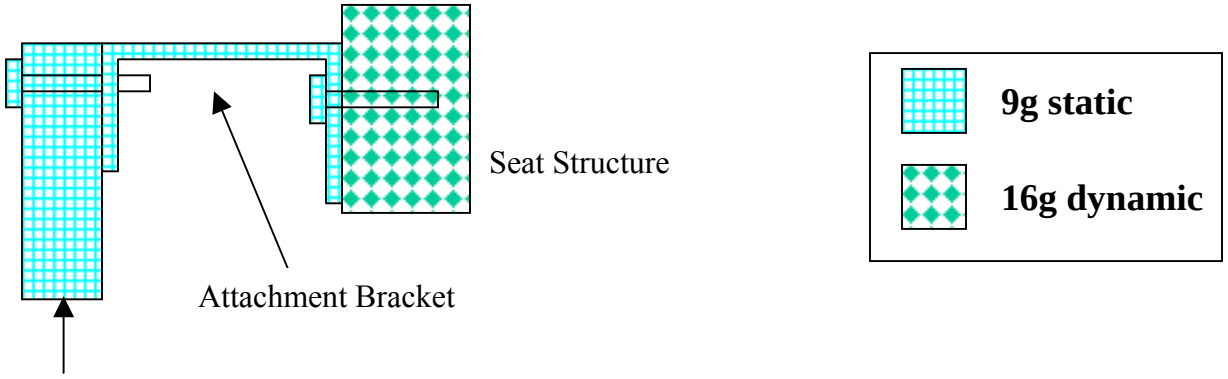

Figure A5-3

d. Lifevests. Lifevests are considered part of the seat and, therefore, require substantiation to the dynamic requirements. However, due the variation possible in lifevests over the family of seats, a simplified method of compliance is needed. The lifevest retention means should be shown to retain an approved lifevest under the

APPENDIX 5. PROCEDURE FOR SUBSTANTIATING RETENTION OF ITEMS ATTACHED TO SEATS (CONTINUED)

dynamic conditions. (See Figure A5-4.) Once this is done, any other approved lifevest may be installed in the lifevest stowage location without further qualification, provided the weights is not increased. It may be advisable to increase the weight of the tested lifevest with ballast to avoid this issue in the future. Observe that the retention requirements do not address lifevest accessibility which is still a requirement to be assessed for each lifevest installation.

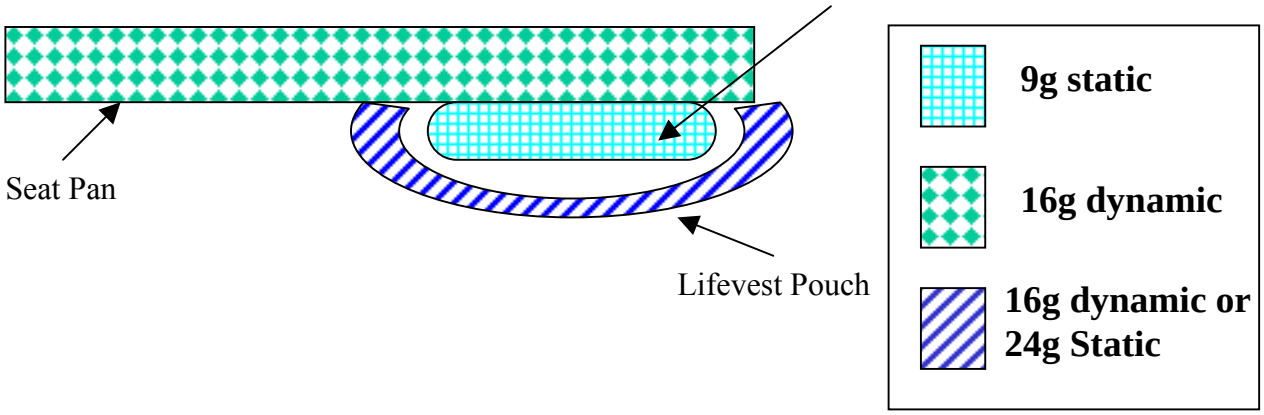

Figure A5-4

e. Very Lightweight Items. Items weighing less than 1/3 pound are not required to be substantiated explicitly. Examples include ash trays, proximity lighting, passenger control units, PC power outlets, decorative trim, audio jacks, cocktail trays, cup holders, and rub strips. These items will typically have very high margins of safety and will not influence the dynamic behavior of the seat. Wiring harnesses are considered lightweight, irrespective of their actual weight, and do not require explicit substantiation.

2. Irrespective of how items are qualified, in order for the seat itself to meet the dynamic test requirements, it must be capable of carrying all loads resulting from all masses attached to the seat.

a. This means that certain items that are qualifed only to the 9g static load requirements must either be artificially restrained for the dynamic tests or be represented by ballast at an appropriate location relative to the center of gravity.

b. If the item is part of the primary or secondary load path or influences occupant injury or egress, it must be representative of production parts on the dynamic test, even if it might otherwise fall into one of the other categories.

APPENDIX 5. PROCEDURE FOR SUBSTANTIATING RETENTION OF ITEMS ATTACHED TO SEATS (CONTINUED)

3. Dynamic retests should be very rare for any issues of retention of items of mass. Retest is required if an item exceeding 3 percent of the empty weight of the seat assembly detached prior to the seat achieving peak reaction loads. In all other cases, the consequences of the failure to retain an item, the effect on the seat, and the effect on egress capability should be assessed to determine whether a retest is necessary. In particular, the load history of the seat reactions should be checked to detemine whether the item was retained until after the seat reached its peak load reactions. If it was, the item should be able to be substantiated statically using the appropriate load factors as discussed above, assuming the seat did not fail some other performance parameter.

Advisory Circular Feedback

If you find an error in this AC, have recommendations for improving it, or have suggestions for new items/subjects to be added, you may let us know by (1) emailing this form to 9-AWA-AVS-AIR500-Coord@faa.gov or (2) faxing it to the attention of the Aircraft Certification Service Directives Management Officer at (202) 267-3983.

Subject: AC 25.562-1B Change 1 _____ Date: _____

Please check all appropriate line items:

☐ An error (procedural or typographical) has been noted in paragraph _____ on page _____ .

☐ Recommend paragraph _____ on page _____ be changed as follows:

☐ In a future change to this AC, please cover the following subject:
(Briefly describe what you want added.)

☐ Other comments:

☐ I would like to discuss the above. Please contact me.

Submitted by: _____ Date: _____