TIPS ON USING BOOKMARKS IN THIS DOCUMENT

We have added a new feature that should help you to move around more quickly in the advisory circular.

On the upper left side, click on “Bookmarks.” You can click on any line that has a plus sign (+) beside it and it will expand to show you everything that comes under that particular section. You can click on any bookmark and you will go directly to that paragraph.

U.S. Department of Transportation
Federal Aviation Administration

Advisory Circular

Subject:	CERTIFICATION OF NORMAL CATEGORY ROTORCRAFT	**Date:**	9/30/2008	**AC No:** 27-1B
		Initiated by:	ASW-110	**Change:** 3

1. PURPOSE.

a. This Advisory Circular (AC) publishes needed changes to the existing AC material as a result of a safety-focused study.

b. This change revises existing material in 6 sections.

c. The change number and the date of the changed material are shown at the top of each page. The vertical lines in the right or left margin indicates the beginning and end of each change. Pages that have different page numbers, but no text changes, will retain the previous heading information.

d. This AC does not change regulatory requirements and does not authorize changes in, or deviations from, regulatory requirements. This AC establishes an acceptable means, but not the only means, of compliance. Since the guidance material presented in this AC is not regulatory, terms having a mandatory definition, such as “shall” and “must,” etc., as used in this AC, apply either to the reiteration of a regulation itself, or to an applicant who chooses to follow a prescribed method of compliance without deviation.

2. PRINCIPAL CHANGES. Sections 27.571, 27.679, 27.695, 27.783, 27.901A, and 27.1351 are revised.

3. WEBSITE AVAILABILITY. To access this AC electronically, log on to http://www.airweb.faa.gov/rgl and then click on AC’s.

AC 27-1B, Chg 3
PAGE CONTROL CHART

Remove Pages	Dated	Insert Pages	Dated
v thru xii	9/30/99 & 4/25/06	v thru xii	9/30/99, 4/25/06, & 9/30/08
C-83 thru C-87	9/30/99 & 2/12/03	C-83 thru C-88	9/30/08
D-39 thru D-40	9/30/99	D-39 thru D-40.2	9/30/08
D-45 thru D-46	9/30/99	D-45 thru D-46	9/30/99 & 9/30/08
D-71 thru D-72	9/30/99	D-71 thru D-72.2	9/30/99 & 9/30/08
E-5 thru E-6	9/30/99	E-5 thru E-6	9/30/08
F-53 thru F-56	9/30/99	F-53 thru F-56	9/30/08

Signed by Scott A. Horn for

Mark R. Schilling
Acting Manager, Rotorcraft Directorate
Aircraft Certification Service

U.S. Department of Transportation
Federal Aviation Administration

Advisory Circular

Subject:	CERTIFICATION OF NORMAL CATEGORY ROTORCRAFT	**Date:**	4/25/06	**AC No:**	27-1B
		Initiated	ASW-110	**Change**	2

1. PURPOSE.

a. This change incorporates all the previously revised AC paragraphs that were posted as accepted and finalized AC material on the FAA RGL website since 2/12/03.

b. This change revises existing material in 16 paragraphs and adds new material for one paragraph.

c. The change number and the date of the changed material are shown at the top of each page. The vertical lines in the right and left margins indicate the beginning and end of each change. Pages that have different page numbers but no text changes will retain the previous heading information.

d. This AC does not change regulatory requirements and does not authorize changes in, or deviations from, regulatory requirements. This AC establishes an acceptable means, but not the only means, of compliance. Since the guidance material presented in this AC is not regulatory, terms having a mandatory definition, such as “shall” and “must,” etc., as used in this AC, apply either to the reiteration of a regulation itself, or to an applicant who chooses to follow a prescribed method of compliance without deviation.

2. PRINCIPAL CHANGES.

a. Paragraphs 27.351, 27.602, 27.672, 27.683, 27.777, 27.1321, 27.1585, MG 1, MG 4, MG 8, MG 16, Appendix A, and Appendix B are revised.

b. The AC material in paragraphs 27.801 and 27.1411 has been revised.

c. The AC material in MG 12 has been revised and is now contained in AC 27.865B, in Subpart D.

d. New paragraph MG 18, Helicopter Terrain and Awareness Systems (HTAWS), is added to Chapter 3.

e. New figures AC 27.351-2 and AC 27.865B-1 are added in Chapter 2.

f. New figures AC 27 MG 8-1, MG 8-2, MG 8-3, MG 8-4, MG 18-1, MG 18-2, and MG 18-2.1 are added in Chapter 3.

3. WEBSITE AVAILABILITY. To access this AC electronically, log on to http://www.airweb.faa.gov/rgl and then click on AC’s.

AC 27-1B, Chg 2
PAGE CONTROL CHART

Remove pages	Dated	Insert Pages	Dated
v thru xxi	9/30/99 & 2/12/03	v thru xxii	4/25/06
C-9 thru C-86	9/30/99 & 2/12/03	C-9 thru C-87	4/25/06
D-1 thru D-58	9/30/99 & 2/12/03	D-1 thru D-58	4/25/06
D-67 thru D-70	9/30/99	D-67 thru D-70	4/25/06
D-83 thru D-112	9/30/99 & 2/12/03	D-83 thru D-134	4/25/06
F-33 thru F-102	9/30/99	F-33 thru F-103	4/25/06
G-43 thru G-48	9/30/99	G-43 thru G-49	4/25/06
MG 1-15 thru MG 1-17	9/30/99	MG 1-15 thru MG 1-16	4/25/06
MG 4-9 thru MG 4-13	9/30/99	MG 4-9 thru MG 4-13	4/25/06
MG 8-1 thru MG 8-15	9/30/99 & 2/12/03	MG 8-1 thru MG 8-31	4/25/06
MG 12-1 thru MG 12-42	9/30/99 & 2/12/03	MG 12-1	4/25/06
MG 16-1 thru MG 16-16	2/12/03	MG 16-1 thru MG 16-18	4/25/06
none		MG 17-1	4/25/06
none		MG 18-1 thru MG 18-27	4/25/06
Apdx A-47 thru Apdx A-70	2/12/03	Apdx A-47 thru Apdx A-71	4/25/06
Apdx B-11 thru Apdx B-20	9/30/99	Apdx B-11 thru Apdx B-20	4/25/06

David A. Downey
Manager, Rotorcraft Directorate
Aircraft Certification Service

U.S. Department of Transportation
Federal Aviation Administration

Advisory Circular

Subject:	CERTIFICATION OF NORMAL CATEGORY ROTORCRAFT	**Date:**	2/12/03	**AC No:**	27-1B
		Initiated	ASW-110	**Change**	1

1. PURPOSE.

a. This change revises existing material in 17 paragraphs and adds new material for 12 paragraphs.

b. The change number and the date of the changed material are shown at the top of each page. The vertical lines in the right and left margins indicate the beginning and end of each change. Pages that have different page numbers but no text changes will retain the previous heading information.

2. CANCELLATION.

a. AC 20-95, Fatigue Evaluation of Rotorcraft Structure, May 18, 1976, is canceled in its entirety, and is replaced by material contained in AC 27 MG 11.

b. AC 20-137, Dynamic Evaluation of Seat Restraint Systems & Occupant Restraint for Rotorcraft (Normal and Transport), March 30, 1992, is canceled in its entirety, and is replaced by material contained in AC 27.562.

c. AC text containing references to AC 20-95 and AC 20-137 was either changed or deleted in paragraphs AC 27.2, 27.562, 27.613, 27.785A, 27.865A, 27.907, 27.952, MG 8, and MG 12.

3. PRINCIPAL CHANGES.

a. Paragraphs 27.562, 27.571, 27.1303, 27.1353, 27.1419, 27.1505, 27.1529, MG 5, MG 6, and MG 12 are revised.

b. New paragraphs 27.610A, 27.625A, 27.785B, 27.805, 27.807B, and 27.853A are added to Chapter 2.

c. New paragraphs MG 11, MG 13, MG 14, MG 15, and MG 16 are added to Chapter 3.

d. Appendix A (previously reserved) is added.

e. New figures AC 27.562-1, 27.562-2, 27.562-3, 27.562-4, 27.562-5, 27.562-6, 27.562-7, and 27.562-8 are added in Chapter 2.

f. New figures AC 27 MG 11-1, 11-2, 11-3, 11-4, 11-5, 11-6, 11-7, 11-8, 11-9, and AC 27 MG 14-1 are added in Chapter 3.

4. WEBSITE AVAILABILITY. To access this AC electronically, log on to http://www.airweb.faa.gov/rgl and then click on AC's.

PAGE CONTROL CHART

Remove pages	Dated	Insert Pages	Dated
iii thru xix	9/30/99	iii thru xxi	2/12/03
A-3 thru A-4	9/30/99	A-3 thru A-4	2/12/03
C-43 thru C-50	9/30/99	C-43 thru C-86	2/12/03
D-7 thru D-105	9/30/99	D-7 thru D-112	2/12/03
E-9 thru E-10	9/30/99	E-9 thru E-10	2/12/03
E-31 thru E-32	9/30/99	E-31 thru E-32	2/12/03
E-39 thru E-44	9/30/99	E-39 thru E-44	2/12/03
F-1 thru F-91	9/30/99	F-1 thru F-102	2/12/03
G-3 thru G-47	9/30/99	G-3 thru G-48	2/12/03
MG 5-3 thru MG 5-6	9/30/99	MG 5-3 thru MG 5-6	2/12/03
MG 6-5 thru MG 6-16	9/30/99	MG 6-5 thru MG 6-16	2/12/03
MG 8-5 thru MG 8-6	9/30/99	MG 8-5 thru MG 8-6	2/12/03
none		MG 11-1 thru MG 11-28	2/12/03
MG 12-21 thru MG 12-24	9/30/99	MG 12-21 thru MG 12-24	2/12/03
MG 12-37 thru MG 12-38	9/30/99	MG 12-37 thru MG 12-38	2/12/03
none		MG 13-1 thru MG 13-8	2/12/03
none		MG 14-1 thru MG 14-8	2/12/03
none		MG 15-1 thru MG 15-18	2/12/03
none		MG 16-1 thru MG 16-16	2/12/03
none		Apdx A-1 thru Apdx A-70	2/12/03

David A. Downey
Manager, Rotorcraft Directorate
Aircraft Certification Service

U.S. Department
of Transportation

Federal Aviation Administration

Advisory Circular

Subject:	CERTIFICATION OF NORMAL CATEGORY ROTORCRAFT	**Date:**	9/30/99	**AC No:**	27-1B
		Initiated by:	ASW-110	**Change:**	

1. PURPOSE:

a. This is a total revision of AC 27-1A dated 7/30/97, with Change 1 dated 9/30/98, incorporated. In addition, new material plus changes to existing paragraphs are incorporated. This consolidated version is now renumbered as AC 27-1B and replaces AC 27-1A in its entirety. This revises existing material in 10 paragraphs, adds new material for three paragraphs, and renumbers paragraphs to correspond with Federal Aviation Regulations (FAR) numbering.

b. Requests from the rotorcraft industry to make the document easier to use resulted in renumbering the AC paragraphs to correspond with FAR numbering. The figure numbers are also renumbered accordingly.

c. This AC does not change regulatory requirements and does not authorize changes in, or deviations from, regulatory requirements. This AC establishes an acceptable means, but not the only means, of compliance. Since the guidance material presented in this AC is not regulatory, terms having a mandatory definition, such as “shall” and “must,” etc., as used in this AC, apply either to the reiteration of a regulation itself, or to an applicant who chooses to follow a prescribed method of compliance without deviation.

d. This advisory circular provides information on methods of compliance with 14 CFR Part 27, which contains the Airworthiness Standards for Normal Category Rotorcraft. It includes methods of compliance in the areas of basic design, ground tests, and flight tests.

2. CANCELLATION. AC 27-1A, Certification of Normal Category Rotorcraft, dated 7/30/97, is canceled in its entirety.

3. BACKGROUND. Based largely on precedents set during rotorcraft certification programs spanning over 40 years, this AC consolidates guidance contained in earlier correspondence among FAA headquarters, foreign authorities, the rotorcraft industry, and certificating regions.

4. PRINCIPAL CHANGES:

a. Chapter 3 is now titled "Miscellaneous Guidance (MG), Normal Category Rotorcraft," with the following changes:

- Paragraphs that correspond to a FAR number are merged into existing AC text in Chapter 2.
- Paragraphs that do not correspond with a FAR number either remain in Chapter 3 and are renumbered as MG paragraphs, or are now an appendix.
- In order to stay aligned with FAR numbering, Appendices A and C are reserved for future AC material.

b. Paragraphs revised to incorporate technical guidance are AC 21.35, 27.561, 27.952, 27.1305, 27.1309, 27.1351, 27.1353, MG 2, and MG 4 (FADEC). AC 27.661, Rotorblade Clearance, contains new material added as a result of National Transportation Safety Board (NTSB) recommendations.

c. New paragraphs added are AC 27.1B and 27.2A, Gross Weight; AC 27.602, Critical Parts; and AC MG 12, External Loads. These paragraphs correspond with recent harmonized regulatory changes.

d. The AC is now divided by Subparts and page numbers reflect the relevant FAR Subpart.

e. "FAA/AUTHORITY" as used in this document means FAA or another airworthiness authority that has adopted this AC as a means of compliance with the appropriate regulation referenced.

5. DEVIATIONS. As rotorcraft designs vary from conventional configurations, it may become necessary to deviate from the methods and procedures outlined in this AC. These procedures are only one acceptable means of compliance with Part 27. Any alternate means proposed by an applicant will be given due consideration. Applicants are encouraged to use their technical ingenuity and resourcefulness to develop more efficient and less costly methods of achieving the objectives of Part 27. Regulatory personnel and designees should respond to such efforts by the use of engineering judgment in fostering any such efforts as long as the letter and spirit of Part 27 and the Federal Aviation Act are respected. It is recommended that unusual or unique projects be coordinated a sufficient time in advance with the Rotorcraft Standards Staff, ASW-110, or with the appropriate airworthiness authority, to ensure timely and uniform consideration.

6. APPLICABILITY. This material is not to be construed as having any legally binding status and must be treated as advisory only. However, to ensure standardization in the certification process, these procedures should be considered during all rotorcraft type certification and supplemental type certification activities.

7. PARAGRAPHS KEYED TO FAR PART 27. Each paragraph has the applicable amendment to Part 27 shown in the title. All of the original guidance material has been retained as appropriate, even as changes are made to the regulations. This is accomplished through the use of "A," "B," etc., paragraphs that follow the original numbered paragraphs. These subsequent paragraphs provide updated guidance information or changes to policy that parallel a specific rule change. The guidance material in the original paragraph (for earlier amendments) still applies and is modified as explained in each of the later paragraphs for later amendments. The applicable amendment number will only appear in the title line for the "A," "B," etc., paragraphs. The guidance material in the initial paragraph is intended to apply to all amendments except as modified by the later paragraphs. Each ensuing "A," "B," etc., paragraph will be identified with an amendment level to indicate the rule change that precipitated the policy change.

8. RELATED PUBLICATIONS. FAA Certification personnel and designees should be familiar with Order 8110.4, Type Certification, and Order 8100.5, Aircraft Certification Directorate Procedures.

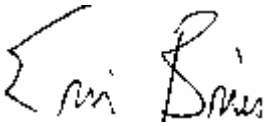

Eric Bries
Acting Manager, Rotorcraft Directorate
Aircraft Certification Service

CONTENTS

CHAPTER 1 - FAR 21 CERTIFICATION PROCEDURES FOR PRODUCTS AND PARTS

Page No.

AC 21.16 Special Conditions ..... FAR 21-1
AC 21.31 Type Design ..... FAR 21-2
AC 21.33 Inspection and Tests ..... FAR 21-2
AC 21.35 Flight Tests ..... FAR 21-2
AC 21.39 Flight Test Instrument Calibration and Correction Report ..... FAR 21-6

CHAPTER 2 - FAR 27 AIRWORTHINESS STANDARDS: NORMAL CATEGORY ROTORCRAFT

SUBPART A - GENERAL

GENERAL

AC 27.1 Applicability A-1
AC 27.1A Applicability A-1
AC 27.1B Applicability A-2
AC 27.2 Special Retroactive Requirements A-2
AC 27.2A Special Retroactive Requirements A-4

SUBPART B - FLIGHT

GENERAL

AC 27.21 Proof of Compliance B-1
AC 27.25 Weight Limits B-3
AC 27.27 Center of Gravity Limits B-4
AC 27.29 Empty Weight and Corresponding Center of Gravity B-6
AC 27.31 Removable Ballast B-7
AC 27.33 Main Rotor Speed and Pitch Limits B-7

PERFORMANCE

AC 27.45 Performance - General B-9
AC 27.45A General B-18
AC 27.45B General B-18
AC 27.51 Takeoff B-25

SUBPART B - FLIGHT (continued)

PERFORMANCE (continued)

Page No.

AC 27.65 Climb: All Engines Operating B-26
AC 27.65A Climb: All Engines Operating B-28
AC 27.67 Climb: One Engine Inoperative B-28
AC 27.71 Glide Performance B-29
AC 27.73 Performance at Minimum Operating Speed B-32
AC 27.75 Landing B-34
AC 27.79 Limiting Height - Speed Envelope B-37
AC 27.79A Limiting Height - Speed Envelope B-45

FLIGHT CHARACTERISTICS

AC 27.141 Flight Characteristics - General B-46
AC 27.143 Controllability and Maneuverability B-47
AC 27.151 Flight Controls B-52
AC 27.161 Trim Control B-53
AC 27.171 Stability: General B-53
AC 27.173 Static Longitudinal Stability B-54
AC 27.175 Demonstration of Static Longitudinal Stability B-55
AC 27.177 Static Directional Stability B-59

GROUND AND WATER HANDLING CHARACTERISTICS

AC 27.231 Ground and Water Handling Characteristics - General B-61
AC 27.235 Taxiing Condition B-61
AC 27.239 Spray Characteristics B-62
AC 27.241 Ground Resonance B-63

MISCELLANEOUS FLIGHT REQUIREMENTS

AC 27.251 Vibration B-68

SUBPART C - STRENGTH REQUIREMENTS

GENERAL

AC 27.301 Loads C-1
AC 27.303 Factor of Safety C-1
AC 27.305 Strength and Deformation C-2
AC 27.307 Proof of Structure C-2

SUBPART C - STRENGTH REQUIREMENTS (continued)

GENERAL (continued)

Page No.

AC 27.307A Proof of Structure C-3
AC 27.309 Design Limitations C-4

FLIGHT LOADS

AC 27.321 Flight Loads - General C-5
AC 27.337 Limit Maneuvering Load Factor C-5
AC 27.339 Resultant Limit Maneuvering Loads C-8
AC 27.341 Gust Loads C-8
AC 27.351 Yawing Conditions C-9
AC 27.361 Engine Torque C-14

CONTROL SURFACE AND SYSTEM LOADS

AC 27.391 Control Surface and System Loads - General C-15
AC 27.391A Control Surface and System Loads - General C-15
AC 27.395 Control System C-15
AC 27.395A Control System C-17
AC 27.397 Limit Pilot Forces and Torques C-17
AC 27.399 Dual Control System C-18
AC 27.401 Auxiliary Rotor Assemblies C-18
AC 27.401A Auxiliary Rotor Assemblies C-20
AC 27.403 Auxiliary Rotor Attachment Structure C-20
AC 27.403A Auxiliary Rotor Attachment Structure C-21
AC 27.411 Ground Clearance: Tail Rotor Guard C-21
AC 27.413 Stabilizing and Control Surfaces C-22
AC 27.413A Stabilizing and Control Surfaces C-24
AC 27.427 Unsymmetrical Loads C-24

GROUND LOADS

AC 27.471 Ground Loads - General C-28
AC 27.473 Ground Loading Conditions and Assumptions C-28
AC 27.475 Tires and Shock Absorbers C-29
AC 27.477 Landing Gear Arrangement C-29
AC 27.479 Level Landing Conditions C-29
AC 27.481 Tail-Down Landing Conditions C-30
AC 27.483 One-Wheel Landing Conditions C-31
AC 27.485 Lateral Drift Landing Conditions C-31
AC 27.493 Braked Roll Conditions C-32

SUBPART C - STRENGTH REQUIREMENTS(continued)

GROUND LOADS (continued)

Page No.

AC 27.497 Ground Loading Conditions: Landing Gear With Tail Wheels C-32
AC 27.501 Ground Loading Conditions: Landing Gear With Skids C-34
AC 27.501A Ground Loading Conditions: Landing Gear With Skids C-35
AC 27.505 Ski Landing Conditions C-35

WATER LOADS

AC 27.521 Float Landing Conditions C-37

MAIN COMPONENT REQUIREMENTS

AC 27.547 Main Rotor Structure C-38
AC 27.549 Fuselage, Landing Gear, and Rotor Pylon Structure C-38

EMERGENCY LANDING CONDITIONS

AC 27.561 Emergency Landing Conditions - General C-40
AC 27.561A Emergency Landing Conditions - General C-41
AC 27.561B Emergency Landing Conditions - General C-42
AC 27.561C Emergency Landing Conditions - General C-43
AC 27.562 Emergency Landing Dynamic Conditions C-43
AC 27.563 Structural Ditching Provisions C-81
AC 27.563A Structural Ditching Provisions C-81

FATIGUE EVALUATION

AC 27.571 Fatigue Evaluation of Flight Structure C-83
AC 27.571A Fatigue Evaluation of Flight Structure for Category A Certification C-86

SUBPART D - DESIGN AND CONSTRUCTION

GENERAL

Page No.

AC 27.601 Design D-1
AC 27.602 Critical Parts D-2
AC 27.603 Materials D-4
AC 27.605 Fabrication Methods D-4
AC 27.607 Fasteners D-5

SUBPART D - DESIGN AND CONSTRUCTION

GENERAL (continued)

		Page No.
AC 27.609	Protection of Structure	D-5
AC 27.610	Lightning Protection	D-6
AC 27.610A	Lightning and Static Electricity Protection	D-9
AC 27.611	Inspection Provisions	D-13
AC 27.613	Material Strength Properties and Design Values	D-14
AC 27.613A	Material Strength Properties and Design Values	D-16
AC 27.619	Special Factors	D-16
AC 27.621	Casting Factors	D-17
AC 27.623	Bearing Factors	D-27
AC 27.625	Fitting Factors	D-28
AC 27.625A	Fitting Factors	D-29
AC 27.629	Flutter	D-29

ROTORS

AC 27.653	Pressure Venting and Drainage of Rotor Blades	D-31
AC 27.659	Mass Balance	D-31
AC 27.661	Rotor Blade Clearance	D-31
AC 27.663	Ground Resonance Prevention Means	D-33
AC 27.663A	Ground Resonance Prevention Means	D-35

CONTROL SYSTEMS

AC 27.671	Control Systems - General	D-36
AC 27.672	Stability Augmentation, Automatic, and Power-Operated Systems	D-36
AC 27.673	Primary Flight Control	D-37
AC 27.674	Interconnected Controls	D-37
AC 27.675	Stops	D-38
AC 27.679	Control System Locks	D-40
AC 27.681	Limit Load Static Tests	D-40.1
AC 27.683	Operation Tests	D-41
AC 27.685	Control System Details	D-41
AC 27.685A	Control System Details	D-42
AC 27.687	Spring Devices	D-43
AC 27.691	Autorotation Control Mechanism	D-43
AC 27.695	Power Boost and Power-Operated Control System	D-44

SUBPART D - DESIGN AND CONSTRUCTION (continued)

Page No.

LANDING GEAR

AC 27.723	Shock Absorption Tests	D-47
AC 27.725	Limit Drop Test	D-50
AC 27.727	Reserve Energy Absorption Drop Test	D-50
AC 27.727A	Reserve Energy Absorption Drop Test	D-51
AC 27.729	Retracting Mechanism	D-51
AC 27.731	Wheels	D-54
AC 27.733	Tires	D-55
AC 27.735	Brakes	D-56
AC 27.737	Skis	D-58

FLOATS AND HULLS

AC 27.751	Main Float Buoyancy	D-59
AC 27.753	Main Float Design	D-60
AC 27.755	Hulls	D-60

PERSONNEL AND CARGO ACCOMMODATIONS

AC 27.771	Pilot Compartment	D-62
AC 27.773	Pilot Compartment View	D-63
AC 27.775	Windshields and Windows	D-68
AC 27.775A	Windshields and Windows	D-68
AC 27.777	Cockpit Controls	D-68
AC 27.779	Motion and Effect of Cockpit Controls	D-69
AC 27.783	Doors	D-72.2
AC 27.783A	Doors	D-74
AC 27.785	Seats, Berths, Safety Belts, and Harnesses	D-74
AC 27.785A	Seats, Berths, Safety Belts, and Harnesses	D-78
AC 27.785B	Seats, Berths, Litters, Safety Belts, and Harnesses	D-80
AC 27.787	Cargo and Baggage Compartments	D-80
AC 27.787A	Cargo and Baggage Compartments	D-82
AC 27.801	Ditching	D-82
AC 27.805	Flight Crew Emergency Exits	D-91
AC 27.807	Emergency Exits	D-91
AC 27.807A	Emergency Exits	D-93
AC 27.807B	Emergency Exits	D-93
AC 27.831	Ventilation	D-94
AC 27.833	Heaters	D-96

FIRE PROTECTION

AC 27.853	Compartment Interiors	D-98
AC 27.853A	Compartment Interiors	D-99
AC 27.855	Cargo and Baggage Compartments	D-99

FIRE PROTECTION (continued)

Page No.

AC 27.859 Heating Systems D-101
AC 27.861 Fire Protection of Structure, Controls, and Other Parts D-105
AC 27.861A Fire Protection of Structure, Controls, and Other Parts D-106
AC 27.863 Flammable Fluid Fire Protection D-107

EXTERNAL LOAD ATTACHING MEANS

AC 27.865 External Load Attaching Means D-109
AC 27.865A External Load Attaching Means D-110
AC 27.865B External Load Attaching Means (previously MG 12) D-111

MISCELLANEOUS (DESIGN AND CONSTRUCTION)

AC 27.871 Leveling Marks D-133
AC 27.873 Ballast Provisions D-133

SUBPART E - POWERPLANT

GENERAL

AC 27.901 Installation E-1
AC 27.901A Installation E-5
AC 27.903 Engines E-5.2
AC 27.903A Engines E-7
AC 27.907 Engine Vibration E-9

ROTOR DRIVE SYSTEM

AC 27.917 Design E-10
AC 27.921 Rotor Brake E-11
AC 27.923 Rotor Drive System and Control Mechanism Tests E-12
AC 27.923A Rotor Drive System and Control Mechanism Tests E-17
AC 27.923B Rotor Drive System and Control Mechanism Tests E-18
AC 27.927 Additional Tests E-19
AC 27.927A Additional Tests E-21
AC 27.931 Shafting Critical Speeds E-21
AC 27.935 Shafting Joints E-26
AC 27.939 Turbine Engine Operating Characteristics E-26

SUBPART E - POWERPLANT (continued)

FUEL SYSTEM (continued)

Page No.

AC 27.951 Fuel System - General E-29
AC 27.952 Fuel System Crash Resistance E-31
AC 27.953 Fuel System Independence E-56
AC 27.954 Fuel System Lightning Protection E-57
AC 27.955 Fuel Flow E-58
AC 27.955A Fuel Flow E-62
AC 27.959 Unusable Fuel Supply E-64
AC 27.961 Fuel System Hot Weather Operation E-65
AC 27.961A Fuel System Hot Weather Operation E-67
AC 27.963 Fuel Tanks: General E-67
AC 27.963A Fuel Tanks: General E-68
AC 27.963B Fuel Tanks: General E-68
AC 27.965 Fuel Tank Tests E-69
AC 27.967 Fuel Tank Installation E-70
AC 27.969 Fuel Tank Expansion Space E-72
AC 27.969A Fuel Tank Expansion Space E-72
AC 27.971 Fuel Tank Sump E-73
AC 27.971A Fuel Tank Sump E-74
AC 27.973 Fuel Tank Filler Connection E-74
AC 27.973A Fuel Tank Filler Connection E-75
AC 27.975 Fuel Tank Vents E-76
AC 27.975A Fuel Tank Vents E-77
AC 27.975B Fuel Tank Vents E-77
AC 27.977 Fuel Tank Outlet E-78

FUEL SYSTEM COMPONENTS

AC 27.991 Fuel Pumps E-80
AC 27.991A Fuel Pumps E-81
AC 27.993 Fuel System Lines and Fittings E-81
AC 27.995 Fuel Valves E-82
AC 27.997 Fuel Strainer or Filter E-82
AC 27.997A Fuel Strainer or Filter E-83
AC 27.999 Fuel System Drains E-84
AC 27.999A Fuel System Drains E-85

OIL SYSTEM

AC 27.1011 Oil System - General E-86
AC 27.1013 Oil Tanks E-86
AC 27.1015 Oil Tank Tests E-87
AC 27.1017 Oil Lines and Fittings E-88

SUBPART E - POWERPLANT (continued)

OIL SYSTEM (continued)

Page No.

AC 27.1019 Oil Strainer or Filter E-88
AC 27.1019A Oil Strainer or Filter E-89
AC 27.1021 Oil System Drains E-90
AC 27.1027 Transmission and Gearboxes: General E-90

COOLING

AC 27.1041 Cooling - General E-92
AC 27.1041A General E-94
AC 27.1043 Cooling Tests E-94
AC 27.1045 Cooling Test Procedures E-97
AC 27.1045A Cooling Test Procedures E-98

INDUCTION SYSTEM

AC 27.1091 Air Induction E-99
AC 27.1091A Air Induction E-100
AC 27.1093 Induction System Icing Protection E-100
AC 27.1093A Induction System Icing Protection E-111

EXHAUST SYSTEM

AC 27.1121 General E-113
AC 27.1123 Exhaust Piping E-114

POWERPLANT CONTROLS AND ACCESSORIES

AC 27.1141 Powerplant Controls: General E-117
AC 27.1141A Powerplant Controls: General E-118
AC 27.1143 Engine Controls E-118
AC 27.1143A Engine Controls E-119
AC 27.1143B Engine Controls E-119
AC 27.1145 Ignition Switches E-120
AC 27.1147 Mixture Controls E-120
AC 27.1151 Rotor Brake Controls E-121
AC 27.1163 Powerplant Accessories E-122

POWERPLANT FIRE PROTECTION

AC 27.1183 Lines, Fittings, and Components E-124
AC 27.1185 Flammable Fluids E-125
AC 27.1187 Ventilation E-126

SUBPART E - POWERPLANT (continued)

POWERPLANT FIRE PROTECTION (continued)

Page No.

AC 27.1189 Shutoff Means E-127
AC 27.1191 Firewalls E-128
AC 27.1193 Cowling and Engine Compartment Covering E-132
AC 27.1193A Cowling and Engine Compartment Covering E-133
AC 27.1194 Other Surfaces E-134
AC 27.1195 Fire Detector Systems E-135

SUBPART F - EQUIPMENT

GENERAL

AC 27.1301 Function and Installation F-1
AC 27.1303 Flight and Navigation Instruments F-1
AC 27.1305 Powerplant Instruments F-7
AC 27.1305A Powerplant Instruments F-8
AC 27.1305B Powerplant Instruments F-9
AC 27.1307 Miscellaneous Equipment F-11
AC 27.1309 Equipment, Systems, and Installations F-13

INSTRUMENTS - INSTALLATION

AC 27.1321 Arrangement and Visibility F-34
AC 27.1322 Warning, Caution, and Advisory Lights F-34
AC 27.1323 Airspeed Indicating System F-39
AC 27.1325 Static Pressure Systems F-40
AC 27.1327 Magnetic Direction Indicator F-41
AC 27.1329 Automatic Pilot System F-41
AC 27.1335 Flight Director Systems F-50
AC 27.1337 Powerplant Instruments F-51
AC 27.1337A Powerplant Instruments F-52

ELECTRICAL SYSTEMS AND EQUIPMENT

AC 27.1351 Electrical Systems and Equipment - General F-55
AC 27.1353 Storage Battery Design and Installation F-58
AC 27.1357 Circuit Protective Devices F-62
AC 27.1361 Master Switch F-64
AC 27.1365 Electric Cables F-64
AC 27.1367 Switches F-66

SUBPART F - EQUIPMENT (continued)

LIGHTS

Page No.

AC 27.1381 Instrument Lights F-67
AC 27.1383 Landing Lights F-67
AC 27.1385 Position Light System Installation F-68
AC 27.1387 Position Light System Dihedral Angles F-68
AC 27.1389 Position Light Distribution and Intensities F-68
AC 27.1391 Minimum Intensities in the Horizontal Plane of Forward and Rear Position Lights F-68
AC 27.1393 Minimum Intensities in Any Vertical Plane of Forward and Rear Position Lights F-68
AC 27.1395 Maximum Intensities In Overlapping Beams of Forward and Rear Position Lights F-68
AC 27.1397 Color Specifications F-68
AC 27.1399 Riding Light F-68
AC 27.1401 Anti-collision Light System F-70

SAFETY EQUIPMENT

AC 27.1411 General F-71
AC 27.1413 Safety Belts F-73
AC 27.1415 Ditching Equipment F-74
AC 27.1419 Ice Protection F-75

MISCELLANEOUS EQUIPMENT

AC 27.1435 Hydraulic Systems F-97
AC 27.1457 Cockpit Voice Recorder F-99
AC 27.1459 Flight Recorders F-101
AC 27.1461 Equipment Containing High Energy Rotors F-103

SUBPART G - OPERATING LIMITATIONS AND INFORMATION

OPERATING LIMITATIONS

AC 27.1501 Operating Limitations - General G-1
AC 27.1503 Airspeed Limitations: General G-1
AC 27.1505 Never-Exceed Speed G-4
AC 27.1509 Rotor Speed G-6
AC 27.1519 Weight and Center of Gravity G-8
AC 27.1521 Powerplant Limitations G-9
AC 27.1521A Powerplant Limitations G-10
AC 27.1521B Powerplant Limitations G-10

SUBPART G - OPERATING LIMITATIONS AND INFORMATION (continued)

OPERATING LIMITATIONS (continued)

Page No.

AC 27.1523 Minimum Flightcrew G-11
AC 27.1525 Kinds of Operations G-15
AC 27.1527 Maximum Operating Altitude G-16
AC 27.1529 Instructions for Continued Airworthiness (Maintenance Manual) G-16
AC 27.1529A Instructions for Continued Airworthiness (Maintenance Manual) G-20

MARKINGS AND PLACARDS

AC 27.1541 Marking and Placards - General G-21
AC 27.1543 Instrument Markings: General G-21
AC 27.1545 Airspeed Indicator G-25
AC 27.1547 Magnetic Direction Indicator G-25
AC 27.1549 Powerplant Markings G-25
AC 27.1549A Powerplant Markings G-26
AC 27.1551 Oil Quantity Indicators G-26
AC 27.1553 Fuel Quantity Indicator G-26
AC 27.1555 Control Markings G-27
AC 27.1557 Miscellaneous Markings and Placards G-28
AC 27.1559 Limitations Placard G-30
AC 27.1561 Safety Equipment G-31
AC 27.1565 Tail Rotor G-32

ROTORCRAFT FLIGHT MANUAL

AC 27.1581 Rotorcraft Flight Manual - General G-33
AC 27.1583 Operating Limitations G-40
AC 27.1585 Operating Procedures G-42
AC 27.1585A Operating Procedures G-45
AC 27.1587 Performance Information G-45
AC 27.1589 Loading Information G-48

CHAPTER 3 - MISCELLANEOUS GUIDANCE (MG), NORMAL CATEGORY ROTORCRAFT

AC 27 MG 1 Certification Procedure for Rotorcraft Avionics Equipment ..... MG 1-1
AC 27 MG 2 Standardized Test Procedure for Rotorcraft DC Electrical System Tests ..... MG 2-1
AC 27 MG 3 Definition of Engine Isolation Features as Applied to §§ 27.79(b)(2), 27.141(b)(1), and 27.143(d)(1) ..... MG 3-1
AC 27 MG 4 Full Authority Digital Electronic Controls (FADEC) ..... MG 4-1
AC 27 MG 5 Agricultural Dispensing Equipment Installation ..... MG 5-1
AC 27 MG 6 Emergency Medical Service (EMS) Systems, Installations, Interior Arrangements, and Equipment ..... MG 6-1
AC 27 MG 7 Hour Meters or Time-in-Service Recording Devices in Rotorcraft ..... MG 7-1
AC 27 MG 8 Substantiation of Composite Rotorcraft Structure ..... MG 8-1
AC 27 MG 9 Rotorcraft One-Engine-Inoperative (OEI) Power Assurance ..... MG 9-1
AC 27 MG 10 Advisory Material for Substantiation of Emergency Flotation System ..... MG 10-1
AC 27 MG 11 Fatigue Evaluation of Rotorcraft Structure ..... MG 11-1
AC 27 MG 12 External Loads (see AC 27.865B) ..... MG 12-1
AC 27 MG 13 Systems Certification Considerations ..... MG 13-1
AC 27 MG 14 Certification Procedure for Installation of Vapor Cycle Air Conditioning Systems ..... MG 14-1
AC 27 MG 15 Airworthiness Approval of Rotorcraft Health Usage Monitoring Systems (HUMS) ..... MG 15-1
AC 27 MG 16 Certification Procedure for Rotorcraft Night Vision Imaging Systems (NVIS) Equipment ..... MG 16-1
AC 27 MG 17 (reserved) ..... MG 17-1
AC 27 MG 18 Helicopter Terrain Awareness and Warning System (HTAWS) ..... MG 18-1

AC 27 Appendix A - Instructions for Continued Airworthiness ..... Apdx A-1
AC 27 Appendix B - Airworthiness Guidance for Rotorcraft Instrument Flight ..... Apdx B-1
AC 27 Appendix C - (*reserved*) (*Criteria for Category A*) ..... Apdx C-1

FIGURES

The first digits in the figure number are the same as the related paragraph number. The digits after the hyphen are the number within the paragraph. Most figures are located at the end of the related paragraph.

Figure No.	Title	Page
AC 27.45-1	H-V Requirements	B-19
AC 27.45-2	IGE Controllability Requirements	B-20
AC 27.45-3	Shaft Horsepower vs. Turbine Outlet Temperature - Sea Level Standard Day	B-21
AC 27.45-4	Uninstalled Takeoff Power Available	B-22
AC 27.45-5	Installed Takeoff Power Available, Anti-Ice Off, 400 RPM	B-23
AC 27.45-6	Power Assurance Check Chart	B-24
AC 27.71-1	Autorotational Characteristics - Typical	B-31
AC 27.79-1	Height-Velocity Diagram	B-43
AC 27.79-2	Altitude/Weight Accountability	B-44
AC 27.175-1	Static Longitudinal Stability	B-58
AC 27.251-1	Demonstration Points	B-70
AC 27.337-1	Load Factor Gross Weight Curve	C-7
AC 27.351-1	Sample Yaw/Forward Speed Diagram	C-12
AC 27.351-2	Safety Factors for Probability of Failure	C-13
AC 27.427-1	View Looking Forward	C-26
AC 27.427-2	View Looking Forward	C-27
AC 27.562-1	Seat Restraint System Dynamic Tests	C-47
AC 27.562-2	Schematic Floor Deformation Fixture; Seat Legs Attached at Floor Level	C-54

Figure No.	Title	Page
AC 27.562-3	Schematic Test Fixture; Side Wall Mounted Seat	C-58
AC 27.562-4	Installation of Pelvic-Lumbar Spine Load Cell in Part 572B Anthropomorphic Dummy	C-62
AC 27.562-5	Measurement to be Taken Over Full Width of Seat Bottom Cushion	C-74
AC 27.562-6	Post Test Condition	C-74
AC 27.562-7	Impulse Shape	C-80
AC 27.562-8	Change in Velocity	C-80
AC 27.571-1	Comparison Percent of Time in Level Flight	C-85
AC 27.621-1	Example of Casting Load Sheet Retract Actuator Support-Landing Gear	D-24
AC 27.621-2	Example of Castings to be Static Tested for Model XYZ	D-26
AC 27.773-1	Cockpit Visibility	D-67
AC 27.801-1	Sea State Code - World Meteorological Organization	D-90
AC 27.865B-1	U.S. Operational (Part 133) Rotorcraft-Load Combination Versus Applicable Cargo Type Data and Definition Summary	D-116
AC 27.931-1	Cantilevered Shaft, First Critical Speed	E-25
AC 27.931-2	Shaft Between Support Bearings, First Critical Speed	E-25
AC 27.952-1	Static Tension and Shear Loading Modes	E-50
AC 27.952-2	Hose Assembly Tests	E-51
AC 27.952-3	Minimum Average and Individual Loads for Hose and Hose-End Fitting Combinations	E-52
AC 27.952-4	Typical Method of Breakaway Fuel Fitting Load Calculations	E-53

Figure No.	Title	Page
AC 27.952-5	Typical Methods of Frangible or Deformable Attachment Load Calculations, Frangible Bolts	E-54
AC 27.952-6	Typical Methods of Frangible or Deformable Attachment Load Calculations, Frangible Baffle	E-55
AC 27.955-1	Fuel Flow	E-61
AC 27.1041-1	Additional Cooling Test Point	E-93
AC 27.1191-1	Table of Materials and Gauges Acceptable for Fireproof Protective Devices with Flat Surface Geometries	E-131
AC 27.1329-1	Deviation Profile	F-48
AC 27.1329-2	Operational Limitation	F-49
AC 27.1419-1	Continuous Icing-Temperature vs. Altitude Limits	F-93
AC 27.1419-2	Intermittent Icing-Temperature vs. Altitude Limits	F-94
AC 27.1419-3	Continuous Icing-Liquid Water Content vs Drop Diameter	F-95
AC 27.1419-4	Intermittent Icing-Liquid Water Content vs. Drop Diameter	F-96
AC 27 MG 3-1	Part 29 Engine Isolation Rules	MG 3-5
AC 27 MG 5-1	Acceptable Ultimate Load Factor for Agricultural Dispensing Equipment Design	MG 5-2
AC 27 MG 5-2	Sketch of Tank Pressure Test	MG 5-6
AC 27 MG 6-1	Typical Liquid Oxygen System	MG 6-17
AC 27 MG 6-2	Typical Liquid Oxygen System - Using Combination Valve	MG 6-18
AC 27 MG 8-1	Schematic Diagram of Building Block Tests	MG 8-16
AC 27 MG 8-2	Characterization of Impact Damage	MG 8-20

Figure No.	Title	Page
AC 27 MG 8-3	Residual Strength vs. Time	MG 8-23
AC 27- MG 8-4	Residual Strength and Damage Size Relationships for Fail-Safe Substantiation	MG 8-24
AC 27 MG 9-1	Installed Engine Fuel Flow Capacity Check	MG 9-8
AC 27 MG 11-1	Example of Variation in Time Spent in Level Flight for Three Rotorcraft Types	MG 11-7
AC 27 MG 11-2	Flight Regime to be Investigated Power-On Operation	MG 11-17
AC 27 MG 11-3	Flight Regime to be Investigated for Power-Off Operation	MG 11-17
AC 27 MG 11-4	Simplified Analytical Method for Safe Life Evaluation	MG 11-18
AC 27 MG 11-5	Typical S/N Curve for Safe Life Evaluation	MG 11-18
AC 27 MG 11-6	Elements of Safe Life Determination	MG 11-19
AC 27 MG 11-7	Flight Load Measurement Program Conditions to be Investigated	MG 11-20
AC 27 MG 11-8	Lifting Helicopter Load Measurement	MG 11-23
AC 27 MG 11-9	Example of Twin Turbine Usage Spectrum	MG 11-24
AC 27 MG 14-1	Refrigeration Cycle	MG 14-7
AC 27 MG 15-1	Flow Chart for Use of Mitigating Actions Applied for Reduction of Software Level	MG 15-8
AC 27 MG 15-2	Flow Chart for Application of HUMS Specific Software with a Ground Base that uses COTS Software for Operational Software	MG 15-11
AC 27 MG 18-1	Recommended Alert Prioritization between HTAWS and TCAS TA	MG 18-16
AC 27 MG 18-2	Flight Test Matrix	MG 18-19

Figure No.	Title	Page
AC 27 MG 18-2.1	TAWS Required Terrain Clearance (RTC) by Phase of Flight	MG 18-25
AC 27 APX B-1	Rotorcraft Dynamic Stability Requirements for IFR	Apdx B-21

Abbreviations and Definitions

AC advisory circular
ACO aircraft certification office
ADF automatic direction finding
ADI attitude direction indicator
AEO all engines operating
AFCS automatic flight control systems
AGL above ground level
AHRS attitude heading reference system
Amdt. Amendment
APU auxiliary power unit
ATC air traffic control
BIM blade inspection method
CAM cockpit area microphone
CAR Civil Air Regulations
CAS calibrated air speed
CBIM cockpit blade inspection method
CDP critical decision point
CG center of gravity
COTS commercial off-the-shelf
CPS cycles per second
CRFS crash resistant fuel system
CRT cathode ray tube
CVR cockpit voice recorder
DER designated engineering representative
DME distance measuring equipment
ECAS engine caution advisory systems
ECU environmental control unit
EFIS electronic flight instrument system
EFP engine failure point
EHE exhaust heat exchanger
ELT emergency locator transmitter
EMC electromagnetic compatibility
EMI electromagnetic interference
EMS emergency medical service
EOL end of life
FAA Federal Aviation Administration
FADEC full authority digital engine control
FAR Federal Aviation Regulations
FEM finite element modeling
FHA functional hazard assessment
FMEA failure mode and effects analysis
FPM feet per minute
FPS feet per second
GPS global positioning system
HF high frequency
HIRF high intensity radiated fields
HRD high rate of discharge
HUMS health and usage monitoring systems
HV height-velocity
IAS indicated airspeed
ICA instructions for continued airworthiness
ICAO International Civil Aviation Organization
ICS inter-communication system
IFR instrument flight rules
IGE in ground effect
IIDS integrated instrument display system
ILS instrument landing system
IMC instrument meteorological conditions
INS inertial navigation system
ISA international standard atmosphere
ISIS integral spar inspection system
ITT inter-turbine temperature
KCAS knots calibrated airspeed
KIAS knots indicated air speed
KTAS knots true airspeed
LDP landing decision point
LWC liquid water content
MCP maximum continuous power
MEL minimum equipment list
MGT measured gas temperature
MMEL master minimum equipment list
MSL mean sea level
MVD median volume diameter
NDI non-destructive inspection
NM nautical mile
NPRM notice of proposed rulemaking
NTSB National Transportation Safety Board
NVG night vision goggles

NVIS night vision imaging systems
OAT outside air temperature
OEI one engine inoperative
OGE out of ground effect
PBA pitch bias actuator
PCF post crash fire
PIO pilot induced oscillation
PSA preliminary safety assessment
PSIG pounds per square inch gauge
QPL qualified parts list
RFM rotorcraft flight manual
RFMS rotorcraft flight manual supplement
RPM revolutions per minute
RTCA Radio Technical Commission of Aeronautics
RVR runway visual range
SAE Society of Automotive Engineers
SAS stability augmentation system
SCAS stability and control augmentation systems
S/N stress vs. number of cycles
SRM structural repair manual
SSA system safety assessment
STC supplemental type certificate
STOL short takeoff and landing
TBO time between overhaul
TC type certificate
TCDS type certificate data sheet
TDP takeoff decision point
TIA type inspection authorization
TIR type inspection report
TOT turbine outlet temperature
TSO: technical standard order
TVP true vapor pressure
VBIM visual blade inspection method
VFR visual flight rules
VMC visual meteorological conditions
VOR very high frequency omnidirectional range radio
VSI vertical speed indicator
V/STOL vertical/short takeoff and landing
VTOL vertical takeoff and landing
WAT weight, altitude, temperature

Altitudes

H_D density altitude
H_P pressure altitude

V speeds

V_D diving speed
V_H speed in level flight with maximum continuous power
V_{MO} maximum operating limit speed
V_{NE} never-exceed speed
V_{TOSS} takeoff safety speed for Category A rotorcraft
V_X speed for best angle of climb
V_Y speed for best rate of climb
M_{MO} maximum operating mach number

N speeds

N_F free turbine speed
N_G gas generator speed
N_P power turbine speed
N_R rotor speed

Coefficients

C_D coefficient of drag
C_L coefficient of lift
C_P coefficient of power
C_T coefficient of thrust

CHAPTER 1. PART 21

FAR 21 - GENERAL

CERTIFICATION PROCEDURES FOR PRODUCTS AND PARTS
(Amendment 21-50)

AC 21.16. § 21.16 SPECIAL CONDITIONS.

a. The Process. Chapter 2, Section 1, Paragraph 8 of the Type Certificate Handbook, Order 8110.4A, provides detailed guidance on the special conditions process. However, much of that material has been outdated with the implementation of the Aircraft Certification Directorate Program. Rotorcraft special conditions are processed through the Rotorcraft Standards Staff, ASW-110. That office will ensure coordination with the affected agency and industry elements including the Assistant Chief Counsel. All comments will be considered and the disposition documented by the Rotorcraft Directorate. ASW-100 will issue the special conditions.

b. Basis for Development.

(1) Special conditions are justified on the basis of the existing Part 27 being inadequate or inappropriate due to novel or unusual design features of the rotorcraft to be certificated.

(2) The phrase “novel or unusual” as used in § 21.16 is a very relative term. As used hereafter in applying § 21.16 to justify the issuance of special conditions, “novel or unusual” will be taken with respect to the state of technology envisaged by the applicable airworthiness standards of this subchapter. It must be recognized that in some areas which will vary from time to time, the state of the regulations may somewhat lag the state of the art in new design because of the rapidity in which the state of the art is advancing in civil aeronautical design and because of the time required to develop the experience base needed by the FAA/AUTHORITY to proceed with general rulemaking. Applicants for type certification of a new design have the opportunity to mitigate the impact of not knowing the precise airworthiness standards to be applied for “novel or unusual design features” by consulting with the FAA/AUTHORITY early in their certification planning when such features are suspected or known by the applicant to exist. It should also be recognized that, because of the intentional objective nature of the airworthiness standards of this subchapter, many new design features which might be thought of as “novel or unusual” may already be adequately covered by existing regulations, thus obviating the need to issue special conditions.

(3) Before proposing special conditions, the certification staff should very thoroughly analyze the existing regulations and ensure they are inadequate or inappropriate in light of a new and novel design feature.

AC 21.31. § 21.31 TYPE DESIGN.

The regulatory basis for requiring data to define the design is contained in § 21.31. This section is self-explanatory and broad enough in scope to give the certification staff access to sufficient data to determine compliance with Part 27.

AC 21.33. § 21.33 INSPECTION AND TESTS.

a. Applicant Responsibility. Section 21.33 requires the applicant to:

(1) Ensure the test rotorcraft conforms to the type design. This must be accomplished prior to presentation to the FAA/AUTHORITY for testing.

(2) Conduct all inspections and tests necessary to determine compliance with the airworthiness and noise requirements.

b. FAA/AUTHORITY Responsibility.

(1) The design evaluation engineers should ensure that the type design is adequate in their technical area and that the inspections and tests to be conducted are appropriate and sufficient to show compliance with Part 27.

(2) As changes to the rotorcraft are made during the test program, the flight test crew should ensure that the appropriate design evaluation engineer concurs with the change and the conformity inspection of the change has been conducted.

AC 21.35 § 21.35 (Amendment 21-59) FLIGHT TESTS.

a. Explanation.

(1) This section outlines the requirements of the applicant for aircraft type certification and should be used in conjunction with FAA Order 8110.4A, Section 5. Section 21.35 requires, in part, that the applicant conduct sufficient flight tests to show compliance with the flight requirements throughout the proposed flight envelope. The results of the applicant's flight test should be submitted to the FAA/AUTHORITY in report form for evaluation to determine what verification flight tests the FAA/AUTHORITY may elect to conduct. The report should conclude that in the applicant's opinion the test aircraft complies with the applicable certification requirements. The FAA/AUTHORITY verification flight test should include, but not be limited to, the critical or marginal results contained in the applicant's flight test report. The FAA/AUTHORITY's role in the certification effort is not envisioned to be one of conducting day-to-day routine flight tests with the applicant, but only to verify his results through limited sampling. In certain tests, such as high altitude testing at a remote mountain site, there is an advantage in conducting flight tests concurrently with the applicant. Additionally, the FAA/AUTHORITY can provide technical flight test

assistance to the applicant in certain cases. This can be done after a cursory review and a letter of authorization is issued to the flight test crew.

(2) Preflight Test Planning. After the applicant's flight test report is reviewed, it should be determined what FAA/AUTHORITY engineering flight tests are necessary. These tests are normally specified in the Type Inspection Authorization (TIA). At the same time the FAA/AUTHORITY must know and agree to the applicant's proposed means of data acquisition, reduction, and expansion of the flight test data. The adequacy of the test instrumentation should be evaluated prior to official type certification tests (reference paragraph AC 21.39).

(3) Order of Testing. The Federal Aviation Regulations are so worded that the results of some flight tests have a definite bearing on the conduct of other tests. For this reason, and to minimize retesting, careful attention should be given to the order of testing. The exact order of testing will be determined only by considering the particular rotorcraft and test program involved. Tests which are particularly important in the early stages of the program are:

(i) Airspeed calibration: All tests involving airspeed depend upon the calibration.

(ii) Engine power available determination.

(iii) Engine cooling.

(4) Test Groupings.

(i) Weight and c.g.: In addition to the regulatory relationship of one test to another, efficient testing requires that consideration be given to the accomplishment of as many tests on a single flight as can be accommodated successfully.

(ii) Special Instrumentation. Similarly, consideration should be given to grouping of tests that involve special instrumentation. Examples of these are takeoff and landing tests which usually require group equipment to record horizontal distance, height, and time. Ground calibration of the airspeed indicating system can be accomplished at the same time. It is the applicant's responsibility to provide the necessary instrumentation.

(5) Functional and Reliability Testing

(i) Section 21.35(b)(2) requires that the applicant determine that "there is reasonable assurance that the aircraft, its components, and its equipment are reliable and function properly." Section 21.35(f)(1) requires a Function and Reliability (F&R) program of 300 hours for turbine engine powered aircraft incorporating engines of a type not previously used in a type certificated aircraft. Section 21.35(f)(2) requires a 150-hour F&R program for all other aircraft. The following reflects general practices that

have been used during rotorcraft certification programs. FAA/AUTHORITY have supported proposals which gave F&R test time credit for certification testing in lieu of dedicated F&R testing. In establishing such credit, the following should be considered:

(A) The point in time in which the rotorcraft reaches substantial conformity with the approved type design.

(B) The extent and complexity of the new design.

(C) For a previously certified rotorcraft, the F&R program requirement should be commensurate with the modification or change in type design and may be zero.

(ii) Historically, for major rotorcraft type certification programs, flight time credit has been limited so as to require an irreducible minimum of 50 hours of dedicated F&R flight time. For rotorcraft programs that involved new engine installations (mature engine design) or drive train/rotor system changes on previously certified aircraft (TC amendments or STC's), flight time credit has been liberal and often resulted in very little or no dedicated F&R testing.

b. Procedures.

(1) Type Certification Flight Tests.

(i) Prior to initiating official FAA/AUTHORITY flight tests, a conformity inspection of the test aircraft must be accomplished. This is needed to assure that the test aircraft is in the proper configuration or "conforms" to the engineering drawings and documents that have been submitted to FAA/AUTHORITY, evaluated, and approved. It is absolutely essential to know the configuration being tested in any engineering flight evaluation. Conformity inspection prior to TIA flight tests assures that testing will not be wasted because of configuration uncertainties.

(ii) FAA Order 8110.4A, paragraph 67, contains a requirement that the applicant must keep the FAA/AUTHORITY advised of any configuration changes to the aircraft. The manufacturing inspector should keep the FAA/AUTHORITY flight test pilot apprised of any change which may affect safety of the test aircraft or may influence test results.

(iii) Results of the conformity inspection and the engineering flight test program must be documented. This is normally done in the Type Inspection Report (TIR). Results may be documented in any acceptable engineering format. The report should be in sufficient detail to clearly show how compliance with each appropriate section of the rules was determined.

(iv) The flight test pilot must assure that the FAA/AUTHORITY manufacturing inspector and certification engineer are aware of all configuration

changes found necessary as a result of FAA/AUTHORITY tests. The manufacturing inspector is responsible for assuring that all changes are incorporated into production drawings after the design data reflecting the change have been approved by the certification engineer.

(v) Additional flight test responsibilities, procedures, and requirements during the certification flight test process are contained in FAA Order 8110.4A, Section 5, Flight.

(2) Function and Reliability Tests.

(i) A comprehensive and systematic check of all aircraft components must be made to assure that they perform their intended function and are reliable.

(ii) F&R testing should be accomplished on an aircraft which conforms to the type design. Non-conformities must be documented and accepted. F&R testing should follow the type certification testing described in paragraph AC 21.35b(1) above to assure that significant changes resulting from type certification tests are incorporated on the aircraft prior to F&R tests.

(iii) All components of the rotorcraft should be periodically operated in sequences and combinations likely to occur in service. Ground inspections should be made at appropriate intervals to identify potential failure conditions; however, no special maintenance beyond that described in the aircraft maintenance manual should be allowed.

(iv) A complete record of defects and failures should be maintained along with required servicing of aircraft fluid levels. Results of this record should be consistent with inspection and servicing information provided in the aircraft maintenance manual.

(v) A certain portion of the F&R test program may focus on systems, operating conditions, or environments found particularly marginal during type certification tests.

(vi) A substantial portion of the flying should be on a single aircraft. The flying should be carried out to an intensive schedule on an aircraft that is very close to the final certification standard, operated and maintained as though it were in service. A range of representative ambient operating conditions and sites should be considered. It is acceptable for non-F&R flight testing conducted at various sites and in varying ambient conditions to be used to satisfy the F&R requirements for those conditions.

AC 21.39. § 21.39 (Amendment 21-59) FLIGHT TEST INSTRUMENT CALIBRATION AND CORRECTION REPORT.

a. Explanation. It is the applicant's responsibility to provide instrumentation for all parameters needed to show compliance with the airworthiness regulations.

(1) For those data which are necessary to show compliance with the regulations, a permanent record should be established. A permanent record is acceptable in either graphical or photographic form, and in some instances a manual recording may be satisfactory.

(2) Regardless of the record form, the accuracy of the record must be established by reference to a laboratory standard traceable to the National Bureau of Standards.

(3) If multiplexing is used, the time base must be synchronized to a reference point from which the magnitude of each parameter can unquestionably be determined. Also, the sampling rate should be sufficiently frequent to ensure that the maximums, minimums, and trends of magnitude of the parameter are recorded with respect to time.

b. Procedures. Prior to conducting flight tests, the FAA/AUTHORITY flight test team should review the applicant's flight test instrumentation, calibration, and correction report.

(1) The frequency of recalibration varies with the consistency of the instrumentation under consideration. For example, cyclic and collective position is sometimes calibrated immediately before and after a flight where these parameters are used to provide critical flight data. Six months is a typical interval for recording/signal conditioning and nonstrain gage sensors, while 1 year is typical for strain gaged components. Also, environmental effects such as vibration, humidity, temperature, etc., should be considered when determining whether recalibration is necessary.

(2) The highest and lowest magnitude of the parameter being recorded should be considered when establishing the scale for instrumentation. Ideally, the highest magnitude throughout the flight would fall on the maximum indicating point of the recording.

CHAPTER 2. PART 27
AIRWORTHINESS STANDARDS
NORMAL CATEGORY ROTORCRAFT

SUBPART A - GENERAL

AC 27.1. § 27.1 APPLICABILITY.

a. Explanation. This section prescribes the rotorcraft categories eligible for certification under this Part. There is no minimum weight limit for certification under Part 29; however, Part 27 is applicable to rotorcraft with maximum weights of 6,000 pounds or less.

(1) Without Engine Isolation. For single-engine rotorcraft and multiengine rotorcraft without engine isolation, the height-velocity (HV) diagram is conducted with sudden failure of all engines, and the takeoff maneuver must pass through the clear area of the diagram to the 50-foot point with all engines operating.

(2) With Engine Isolation. Part 27 multiengine rotorcraft may be certificated with engine isolation features (reference paragraph AC 27 MG 3). These rotorcraft are not required to meet the Part 29, Category A, performance requirements, and continued flight after an engine failure is not assured since under some conditions failure of the remaining engine may occur after a limited time. The takeoff is conducted with all engines operating, while the height-velocity diagram is determined with the most critical engine inoperative. If complete Part 29, Category A, design features and performance are achieved, the Category A performance may be included in the FAA/AUTHORITY-approved portion of the Rotorcraft Flight Manual although this performance is not required by the regulations.

b. Procedures. None.

AC 27.1A. § 27.1 (Amendment 27-33) APPLICABILITY.

a. Explanation. Amendment 33 formally introduced the requirements for certification of a Part 27 rotorcraft to Category A design and performance standards. These standards are found in Appendix C of Part 27. The establishment of Category A design and performance for multiengine Part 27 rotorcraft is still voluntary. If so requested, the corresponding AC 29-2C material applies.

b. Procedures. None

AC 27.1B § 27.1 (Amendment 27-37) APPLICABILITY.

a. Explanation. Amendment 27-37 increases the normal category rotorcraft maximum gross weight limit from 6,000 to 7,000 pounds and introduces new airworthiness requirements. The gross weight increase was intended to compensate for past regulatory actions that, in effect, cumulatively increased the gross weight of normal category rotorcraft. The amendment also adds an explicit nine-passenger seat limitation. The new airworthiness requirements were intended to increase the level of safety to support a potential increase in the number of passenger seats associated with the increase in maximum gross weight limit.

b. Procedures. None

AC 27.2 § 27.2 (Amendment 27-28) SPECIAL RETROACTIVE REQUIREMENTS.

a. Explanation.

(1) Amendment 27-28 requires a combined shoulder harness and safety belt (also called a torso restraint system) at each occupant's seat for all rotorcraft manufactured after September 16, 1992.

(2) The design features of the restraint system are mainly contained in this section rather than having to refer to other sections within Part 27 except for a general reference to the differing strength standards between earlier static strength only standards and the static and dynamic strength standards of Amendment 27-25.

(3) Combined safety belt and harness strength standards system follows:

(i) Those rotorcraft type designs certificated to static strength standards alone prior to Amendment 27-25, such as 4 g's forward may use belt and harness systems, characterized as 1,500 pounds strength systems, provided they comply with those standards. TSO C22f and earlier restraint systems have such ratings. A combined belt and harness with a 1,500 pounds rating, which comply with the Part 27 standards for the rotorcraft type design, but are not necessarily TSO approved, may be approved as a part of the type design. Such design information for a non-TSO'd item would be included in a note on the aircraft type certificate data sheet (TCDS) or specification sheet by part number as "required equipment." TSO C114-approved torso restraint systems, characterized as 3,000 pounds strength system, may be used provided the design features comply with this section, but no special information on the TCDS is necessary.

(ii) Those rotorcraft type designs certified to dynamic test requirements of Amendment 27-25 should use torso restraint systems approved under TSO C114 or approved under equivalent standards such as those contained in Part 27.

(4) Load Distribution and Design Requirements. Although not stated in § 27.2, a 60 percent and 40 percent load distribution between the safety belt and harness, respectively, is required in § 27.785(g). The safety belt should withstand 100 percent if the safety belt is capable of being used alone. Also, the safety belt or harness attachments to the seat or structure should include the 1.33 factor described in § 27.785(f)(2) of Amendment 27-21 for those rotorcraft with that certification criteria or should include the 1.15 factor as described in § 27.625 (and predecessor Part 6) standards for those rotorcraft with the earlier certification criteria. A factor is used whether test or analysis methods are used for static substantiation of the seating systems. Refer to paragraph AC 27.785c(i) (§ 27.785).

(5) The companion operating rule change of Amendment 91-220, amended § 91.205 (Amendment 91-223), affecting the aircraft equipment requirements. Operating rule § 91.107(a) already requires use of the harness whenever the aircraft seat is so equipped.

b. Procedures.

(1) A TSO-approved combined safety belt and harness or torso restraint system may be used provided the installation requirements in § 27.2 are satisfied. A combined belt and harness (not necessarily TSO approved) may be approved as a part of the rotorcraft type design and so noted on the aircraft specification or TCDS.

(2) Structural analysis or static test may be used. For those rotorcraft designs that are subject to the dynamic test standards of § 27.562, the torso restraint system is required to be qualified for the particular use or installation in each rotorcraft type design. A dynamic test may be required for alternate restraint systems as well as the originally approved system. TSO C114 approval does not constitute approval for installation of a restraint system in a rotorcraft design subject to dynamic test.

(i) Paragraph 27.562 of this AC concerns in part the dynamic test standards of Amendment 27-25.

(ii) AC 23-4 dated June 20, 1986, concerns static test procedures for small airplane seats and restraint systems. (Certain small airplanes manufactured after December 12, 1986, should have harnesses for each seat also.) A test proposal for rotorcraft installations may adopt procedures appropriate to the particular installation. The 60/40 percent distribution is sufficiently achieved when the blocks in Figure 4 of AC 23-4 are used.

(iii) The static design side load for the harness installation may be proven by test or analysis using the load distribution previously noted. For “older” designs, the side load of § 27.561(b)(3)(iii) is 2.0g, and for later designs (Amendment 27-25 and later), it is 8.0g.

AC 27.2A § 27.2 (Amendment 27-37) SPECIAL RETROACTIVE REQUIREMENTS.

a. Explanation. Amendment 27-37 specifies that for any change in type design to a rotorcraft that increases the passenger-seat capacity to a number greater than seven (and limited to a maximum of nine) the rotorcraft must meet all the applicable paragraphs of this Part in effect on October 18, 1999, regardless of the original certification basis. Additionally, the amendment allows for an increase in maximum gross weight from 6,000 pounds up to 7,000 pounds for previously certified rotorcraft provided there is no increase in the maximum passenger-seat capacity beyond that for which the rotorcraft was certificated on October 18, 1999. If a passenger-seat capacity increase is requested in addition to an increase in gross weight above 6,000 pounds, then, once again, all applicable paragraphs of this Part in effect on October 18, 1999, must be met.

b. Procedures. None.

CHAPTER 2. PART 27
AIRWORTHINESS STANDARDS
NORMAL CATEGORY ROTORCRAFT

SUBPART B - FLIGHT

GENERAL

AC 27.21. § 27.21 (Amendment 27-21) PROOF OF COMPLIANCE.

a. Explanation.

(1) This section provides a degree of latitude for the FAA/AUTHORITY test team in selecting the combination of tests or inspections required to demonstrate compliance with the regulations. Compliance should be shown for applicable combinations of gross weight, center of gravity, altitude, temperature, airspeed, rotor RPM, etc. Engineering tests are designed to investigate the overall capabilities and characteristics of the rotorcraft throughout its operational envelope. Testing will identify operating limitations, normal and emergency procedures, and performance information to be included in the FAA/AUTHORITY-approved portion of the flight manual. The testing must also provide a means of verifying that the rotorcraft's actual performance, structural design parameters, propulsion components, and systems operations are consistent with all certification requirements.

(2) Section 21.35 requires, in part, that the applicant show compliance with the applicable certification requirements, including flight test, prior to official FAA Type Inspection Authorization (TIA) testing. Compliance in most cases requires systematic flight testing by the applicant. After the applicant has submitted sufficient data to the FAA/AUTHORITY showing that compliance has been met, the FAA/AUTHORITY will conduct any inspections, flight, or ground tests required to verify the applicant's test results. FAA/AUTHORITY compliance may be partially determined from tests conducted by the applicant if the configuration (conformity) of the rotorcraft can be verified. Compliance may be based on the applicant's engineering data and a spot check or validation through FAA/AUTHORITY flight tests. The FAA/AUTHORITY testing should obtain validation at critical combinations of proposed flight variables if compliance cannot be inferred using engineering judgment from the combinations investigated.

(3) Performance tests include minimum operating speed (hover), takeoff and landing, climb, glide, height-velocity, and power available. Certain other performance tests, such as critical engine survey for multiengine installations, may be conducted to meet specific requirements. Detailed performance test procedures and allowable extrapolation or simulation limits are contained in the respective paragraphs in this AC.

(i) Hover tests are conducted to determine various combinations of altitude, temperature, and gross weight for both in-ground-effect (IGE) and, if required

by the applicant, out-of-ground effect (OGE) conditions. From these data, the hover ceiling may be calculated.

(ii) Takeoff and landing tests are conducted to determine that a takeoff or landing can be safely executed without requiring exceptional piloting skill or favorable conditions at any approved combination of altitude, temperature, and gross weight.

(iii) For rotorcraft other than helicopters, climb tests establish the variations of rate-of-climb at the best rate-of-climb or published climb airspeed(s) at various combinations of altitude, temperature, and gross weight. For helicopter, climb tests are conducted as required to determine the best rate-of-climb speed, V_y.

(iv) Height-velocity tests are conducted to determine the boundaries of the height versus airspeed envelope from which a safe landing can be accomplished following an engine failure.

(v) Power available tests are conducted to verify the calculated installed specification engine performance model on which published performance is based.

(4) The purpose of rotorcraft stability and control tests is to verify that the rotorcraft possesses the minimum qualitative and quantitative flying qualities and handling characteristics required by the applicable regulations. In order to assess the handling qualities, standardized test procedures must be utilized and the results analyzed by accepted methods. Section 27.21(a) allows calculation and inference which includes extrapolation and simulation, whereas § 27.21(b) requires demonstration of controllability, stability, and trim. Combinations of § 27.21(a) and (b) may be used to show compliance with the operating envelope limits. Test methods and equipment are described in individual paragraphs of this advisory circular.

b. Procedures.

(1) Efforts should begin early in the certification program to provide advice and assistance to the applicant to ensure coverage of all certification requirements. The applicant should develop a comprehensive test plan which includes the required instrumentation.

(2) The tests and findings specified in paragraph AC 27.21a(3) are required of the applicant to show basic airworthiness and probable compliance with the minimum requirements specified in the applicable regulations. After these basic findings have been submitted and reviewed, a Type Inspection Authorization, or equivalent, can be issued. The FAA/AUTHORITY will develop a systematic plan to spotcheck and confirm that compliance with the regulations has been shown. The test plan will consider combinations of weight, center of gravity, and RPM and cover the range of altitude and temperature for which certification is requested.

AC 27.25. § 27.25 (Amendment 27-14) WEIGHT LIMITS.

[See new AC 27.25A (dated 9/17/2009) posted as separate document in RGL with this Master AC.]

a. Explanation.

(1) This section is definitive and specifies criteria for establishing maximum and minimum certificating weights. These weights may be based on those selected by the applicant, design requirements, or the limits for which compliance with all applicable flight requirements has been shown.

(2) Typical requirements that may establish the maximum and minimum weight limits include:

(i) Maximum: Structural limits, performance requirements, stability, and controllability requirements.

(ii) Minimum: Autorotative rotor RPM, stability, and controllability requirements.

(3) Jettisonable External Cargo.

(i) Section 27.25(c) was added by Amendment 27-11 to provide a basis for approving an increased gross weight that would be an external jettisonable load. Section 27.865, “External load attaching means, “ includes hoist and hook design features for the load attaching devices that were added to Part 27 but removed from § 133.43. Part 133, “Rotorcraft External-Load Operations,” was also amended (Amendment 133-5) concurrently to complement the changes to Parts 27 and 29.

(ii) Approvals under the policy in Review Cases Nos. 37 and 55 of FAA Order 8110.6 were no longer necessary. These review cases concerned the policy/standards for external cargo configurations using a cargo hook whenever the standard limitations were exceeded. If the standard limitations were not exceeded, external cargo hooks and hoists and external cargo configuration approvals could be made under Part 133, Subpart D, prior to Amendment 133-5.

(iii) In the preamble of Amendment 27-11 (Proposal 2-99, 41 FR 55454; December 20, 1976) the agency stated that “...§ 27.25(c) and § 29.25(c) are intended to provide only a total weight standard for approving the rotorcraft structure for operation under Part 133.” The policy in Review Case No. 55 also indicates the powerplant or propulsion system is also subject to evaluation for the increased weight. As indicated in § 27.865, fatigue substantiation of the external cargo attaching means is not required. The rotorcraft structure, rotors, etc., are only subject to fatigue evaluation under § 27.571 whenever the standard structural limitations are exceeded (Review Case No. 55).

(iv) Whether or not the standard limitations are exceeded, the flight characteristics evaluations/standards of § 133.41 are appropriate even for engineering

approval. Section 133.41 is also appropriate for the individual operator to obtain his operating certificate. The operator may use an FAA/AUTHORITY approved RFM supplement to prepare his own rotorcraft load combination flight manual required by § 133.47.

b. Procedures.

(1) It may not be possible to demonstrate quantitatively all the flight requirements at the minimum weight because of test instrumentation requirements. The test team must ensure that the rotorcraft complies with the applicable requirements at the lowest permissible flying weight. This evaluation may be done qualitatively with the test instrumentation removed and with minimum crewmembers if no critical areas exist or are anticipated. Additionally, reasonable extrapolation is permitted. However, if critical areas at minimum flying weights are apparent, extrapolation should not be permitted.

(2) Whenever a gross weight increase under § 27.25(c) is requested, a TIA evaluation is necessary to evaluate the new limitations and ensure that § 133.41 for typical or representative cargo weights and/or shapes (or density) is satisfactory. All possible combinations of weights and shapes are not evaluated. The representative configurations may be noted in the RFM or RFM Supplement for the operator's information. Sections 133.41 and 133.47 must be satisfied by the individual operator for the particular case at hand. The approved RFM or RFM Supplement should provide the necessary limitations and any other information about the representative cargo configurations evaluated. Section 133.41 also permits the operator to obtain approval of additional and unique cargo configurations provided approved limitations are observed. Paragraph AC 27.1581 concerns the RFM and its contents.

(3) See AC 29-2C, Certification of Transport Category Rotorcraft, paragraph AC 29.571, concerning § 29.571, for fatigue substantiation and external cargo considerations that apply to § 27.571 as well.

(4) Refer to AC 133-1A, Rotorcraft External-Load Operations in Accordance with FAR Part 133, for further information on airworthiness and flight manual policy for operators.

[See new AC 27.25A (dated 9/17/2009) posted as separate document in RGL with this Master AC.]

AC 27.27. § 27.27 (Amendment 27-2) CENTER OF GRAVITY LIMITS.

a. Explanation.

(1) This regulation is definitive and requires that the center of gravity limits be defined. Proof of compliance with all applicable flight requirements is required within the range of established CG's. Along with the longitudinal CG limits, the lateral CG limits should either be established or determined to be not critical.

(2) Ballast is usually carried during the flight test program to investigate the approved gross weight/center of gravity limits. Lead is the most commonly used form of ballast during rotorcraft flight testing although other types of ballast, such as water, may serve just as well. Water may have the added benefit of being jettisonable during critical flight test conditions. Care must be taken regarding the location of ballast. The strength of the supporting structures should be adequate to support such ballast during the flight loads that may be imposed during a particular test and for the ultimate inertia forces of § 29.561(b)(3). Of critical importance is the method of securing the ballast to the desired locations. To avoid any undesired in-flight movements of the ballast, a positive method of constraint is mandatory. The flight test crews should also visually verify the amount, location, and integrity of the ballast. The effects of mass moment of inertia on the flight characteristics due to the ballast locations should also be considered. The mass moment of inertia of the test rotorcraft should, to the extent possible, be the same as that expected in normal, approved loadings, especially during tests involving dynamic inputs.

b. Procedures.

(1) Center of gravity locations and limits are of prime importance to rotorcraft stability and safety in flight. The primary concern is establishment of the longitudinal center of gravity limits. Lateral center of gravity limits with respect to longitudinal center of gravity limits are also important. The design of the rotorcraft is usually such that approximate lateral symmetry exists. This lateral symmetry can be upset by numerous probable lateral loadings possibly resulting in the necessity to establish lateral center of gravity limits. Stability and control characteristics may be seriously affected by loading outside the established center of gravity limits. The established center of gravity limits must be that as fuel is consumed, it is possible for the rotorcraft to remain within the established limits by acceptable loading and/or operating instructions.

(2) Structural limits may restrict the maximum forward longitudinal center of gravity limits. However, in most cases it is the maximum value established wherein adequate low speed control power exists to meet such requirements as § 27.143(c). Likewise, the maximum aft center of gravity limit may be a “structural limit,” but it usually is determined during flight test after the rotorcraft’s handling qualities tests have been conducted. Flight tests may reduce the “structural limit” CG envelope, but flight tests alone should not be used to expand the “structural limit.” Additional items which may influence the maximum aft center of gravity limits may be malfunctions of automatic stabilization equipment, excessive rotorcraft attitudes during critical phases of flight, or adequate control power to compensate for an engine failure.

(3) Lateral center of gravity limits have become more critical because of the ever increasing utilization of the rotorcraft for such things as unusual and unsymmetric lateral loads, both internal and external. Maximum allowable lateral center of gravity limits have also influenced the results of the unusable fuel determination.

(4) In summary, it is of prime importance that longitudinal and lateral center of gravity limits be determined so that unsafe conditions do not exist within the approved altitude, airspeed, ambient temperature, gross weight, and rotor RPM ranges. All relevant malfunctions must be considered.

AC 27.29. § 27.29 (Amendment 27-14) EMPTY WEIGHT AND CORRESPONDING CENTER OF GRAVITY.

a. Explanation. The empty weight of the rotorcraft consists of the airframe, engines, and all items of operating equipment that have fixed locations and are permanently installed in the aircraft. It includes fixed ballast, unusable fuel, and full operating fluids except water intended for injection in the engines.

(1) Fixed ballast refers to ballast that is made a permanent part of the rotorcraft as a means of controlling the empty weight CG.

(2) Compliance with paragraph (b) of § 27.29 is accomplished by the use of an equipment list which defines the installed equipment at the time of weighing and the weight arm and moment of the equipment.

b. Procedures.

(1) Determination of the empty weight and corresponding center of gravity is primarily the responsibility of the manufacturing inspector. This determination is normally made on the production rotorcraft rather than the prototype. If the manufacturer wishes to avoid the necessity of weighing each production rotorcraft and he has been issued a production certificate, he may make a detailed proposal defining the procedures he will use to establish an empty weight and CG When his proposal is approved, he will weigh the first five to ten production rotorcraft and show that the rotorcraft will be within ±1 percent on empty weight and ±0.2 inches on CG After this procedure is established, the empty weight and CG may be computed except that at regular intervals, a rotorcraft will be weighed to ensure the tolerances are still being maintained; e.g., one in ten rotorcraft.

(2) For prototype and modified rotorcraft, it is only necessary to establish a known basic weight and CG position (by weighing) from which the extremes of weight and CG travel required by the test program may be calculated. See AC 91-23 (Pilots Weight and Balance Handbook) for a sample weight and balance procedure.

(3) The weight and balance should be recalculated if a modification (or series of modifications) to the rotorcraft results in a significant change to the empty weight. Additionally, this change in empty weight should be reflected with the weight and balance information contained in the Rotorcraft Flight Manual (RFM) or Rotorcraft Flight Manual Supplement (RFMS).

c. Ballast Loading and Type.

(1) Ballast loading of the rotorcraft can be accomplished in any manner to achieve a specific CG location. It is acceptable for such ballast to be mounted outside the physical confines of the rotorcraft if the flight test objectives are not affected by this arrangement. In flight test work, loading problems will occasionally be encountered in which it will be difficult to obtain the desired CG limits. Such cases may require loading in engine compartments or other places not designed for load carrying. When this condition is necessary, care should be taken to ensure that local structural stresses are not exceeded or that the rotorcraft flight characteristics are not changed due to increased moments of inertia by attaching the ballast to extreme CG locations which may not be designed for the added weight.

(2) There are basically two types of ballast that may be used in loading. They are solids or liquid. The solids are usually high density materials such as lead while the liquid usually used is water. In critical tests, the ballast may be loaded in a manner so that disposal in flight can be accomplished. In any case, the load should be securely attached in its loaded position so shifting or interference with safety of flight will not result.

AC 27.31. § 27.31 REMOVABLE BALLAST.

a. Explanation. This regulation provides the option of using removable ballast to obtain desired center of gravity locations to determine compliance with the flight requirement of this Part. Fixed ballast used for flight operations after type certification must be documented in the type design data. Removable ballast is used primarily on small rotorcraft to control the CG with different passenger loadings although this regulation does not permit its use on transport rotorcraft. If removable ballast is used, the rotorcraft flight manual must include instructions regarding its use and limitations.

b. Procedures. None

AC 27.33. § 27.33 (Amendment 27-14) MAIN ROTOR SPEED AND PITCH LIMITS.

a. Explanation.

(1) General. This section requires the establishment of power-on and power-off main rotor speed limits and the requirements for low rotor speed warning.

(2) Power-On. The power-on limits should be sufficient to maintain the rotor speed within these limits during any appropriate maneuver expected to be encountered in normal operations throughout the flight envelope for which certification is requested. In the past a minimum power-on range of approximately 3 percent has been required due to engine governor and engine operating characteristics. With the introduction of advanced engines and electronic engine controls, there may not be a need for a range. One fixed value may suffice. If substantiated, transient power-on values may also be acceptable.

(3) Power-Off. The power-off rotor speed limits should be sufficient to encompass the rotor speeds encountered during normal autorotative maneuvers except for final landing phase (touchdown) for which rotor RPM may be lower than the minimum transient limit for flight, provided stress limits are not exceeded. The limits should also be sufficient to cover the ranges of airspeed, weight, and altitudes for which certification is requested. It is not the intent of the rule to require the minimum and maximum limit values in conjunction with extremes such as maximum/minimum weights and/or high altitude. The minimum and maximum rotor speed requirements should be thoroughly evaluated at normal operating environment; i.e., at altitudes from approximately sea level to 10,000 feet, temperatures not at extremes, and weights as necessary for other tests and as required to readily establish the limit rotor speeds. Spot checks of the autorotative requirements should be made at the extremes of the flight envelope and environmental conditions during normal tests at those conditions. Under conditions where high autorotative rotor speeds may be encountered, it is acceptable for the pilot to adjust the controls to prevent overspeeding of the rotor. At light weight combined with low altitudes and extremely cold temperatures, the normal low pitch setting may not be sufficient to maintain autorotational rotor speed values within limits. If this occurs, the manufacturer may elect to adjust the low pitch stops as a maintenance procedure at extreme ambient conditions provided the flight and maintenance manuals clearly present the rigging requirements and procedures. There must be sufficient “overlap” of ambient conditions between configurations such that rerigging is not required whenever ambient temperature and surface elevation change slightly. Any downrigging of the low pitch stop must continue to ensure adequate clearance between controls and other rotorcraft structure and should be evaluated during flight test. Both the power-on and power-off limits may also be established by encountering critical flapping limits in some approved flight conditions such as high airspeed or sideward flight.

(4) Low Speed Warning. If it is possible under expected operating conditions for the rotor speed to fall below the minimum approved values, the requirement exists for a low rotor speed warning. This warning is required on all single-engine rotorcraft and on multiengine rotorcraft where there is not an automatic increase in remaining engine(s) power output upon failure of an engine. Although not required by the rule, essentially all of today’s multiengine rotorcraft have a low rotor speed warning system installed. If the minimum power-on and power-off rotor speed limits are different, the warning signal should be at the higher speed, normally the power-on minimum rotor speed. One type of rotorcraft has a warning system cutout if the collective is full down, and other types have other warnings on the engine speed to indicate engine failure. All of these related warning systems must be evaluated with emphasis on ensuring adequate rotor speed.

b. Determination and Testing. Refer to paragraph AC 27.1509 (§ 27.1509) for additional information on determining and testing rotor limits.

SUBPART B - FLIGHT

PERFORMANCE

AC 27.45. § 27.45 (Amendment 27-21) PERFORMANCE--GENERAL.

a. Explanation.

(1) Section 45 of Part 27 lists some of the rules and standards under which the performance requirements are to be met. This paragraph will provide general guidelines that may be used throughout a flight test program. It is impossible to find ideal test conditions and there are many variables which affect the flight test results that must be taken into account. Some of these variables are wind, temperature, altitude, humidity, rotorcraft weight, power, rotor RPM, center of gravity, etc. A thorough knowledge of the testing procedures and data reduction methods is essential and good engineering judgment must be used to determine acceptable test conditions. The test results should be analyzed and expanded by approved methodology within the guidelines of this paragraph.

(2) Performance should be based on approved engine power as determined in paragraph b(5) below and not on any transient limits. Approved transient limits are basically for inadvertent overshoots of approved operational limits and any sustained operation in these transient limit areas usually requires some form of special maintenance. However, for such demonstrations as landing procedure demonstration and height-velocity (HV) determination, low rotor speeds (within approved limits) have been authorized. Such transients, if authorized, must be flight evaluated.

(3) Where variations in the parameter on which a tolerance is allowed will have an appreciable effect on the test, the results should be corrected to the standard value of the parameter; otherwise, no correction is necessary.

b. Procedures.

(1) Winds for Testing.

(i) Allowable wind conditions will vary with the type of test and will also be different for different types and gross weight rotorcraft. For example, higher winds can usually be tolerated for takeoff and landing tests than for hover performance. Higher winds can sometimes be tolerated during hover performance testing on rotorcraft with high rotor downwash velocities. Generally, unless the effects of wind on hover performance tests can be determined and/or accounted for, hover performance testing should be conducted in winds of 3 knots or less.

(ii) In-ground-effect controllability and maneuverability testing should be conducted in surface winds of less than 5 knots, or when higher steady wind conditions exist, with a maximum gust spread of 5 knots.

(iii) As can be seen from the foregoing, there is no such thing as an exact allowable wind for a particular test or rotorcraft. The flight test team must decide on the allowable wind for each condition based on all available information and their engineering judgment. The following summary of allowable wind conditions is given for general guidance only:

(A) Hover performance - 0 to 3 knots.

(B) Height-velocity - 0 to 3 knots.

(C) IGE controllability and maneuverability - 0 to 5 knots.

(iv) A means should be provided to measure the wind velocity, direction, and ambient air temperature at the rotor height for any particular tests.

(2) Altitude Effects. Using FAA/AUTHORITY-approved methodology, hover performance may be extrapolated and/or interpolated from test data up to a maximum of ±4,000 feet. Experience has shown that IGE handling qualities, height-velocity, and engine operating characteristics should not be extrapolated higher than approximately 2,000 feet density altitude from the test altitude. Cruise stability/controllability tests should be evaluated at least at two different altitudes, the lowest practical altitude and approximately the highest cruise altitude requested for approval. This can allow an interpolation of approximately 10,000 feet. As in all testing, extrapolation and/or interpolation should only be considered if all available information and engineering judgment indicate that regulatory compliance can be met at the untested conditions.

(3) Altitude Limitations.

(i) Explanation.

(A) Two altitudes are normally presented in the RFM to define the operating envelope of a rotorcraft;

- Maximum operating altitude, and
- Maximum takeoff and landing altitude.

(B) Maximum operating altitude is an operating limitation required by § 27.1527 and delineates the maximum altitude to which operation is allowed. This altitude normally constitutes the maximum cruise or en route altitude.

(C) Maximum takeoff and landing altitude is the hover in-ground-effect (IGE) ceiling for a rotorcraft as described in § 27.73. The hover ceiling and any

information pertinent to takeoff and landing are presented in the performance information section of the RFM. For rotorcraft certified to CAR 6, Amendment 6-7 or any amendment of FAR 27, a hover ceiling may not be presented above the altitude at which H-V and IGE controllability tests were conducted plus allowable extrapolation, unless that extrapolated altitude is at least 7,000 feet. If the applicant elects to demonstrate these tests to an altitude below 7,000 feet, then that altitude is the maximum takeoff and landing altitude of the rotorcraft. The maximum takeoff and landing altitude may be coincident with, but never above the maximum operating altitude limitation. Takeoff and landing and hover ceiling data and presentation requirements are presented in §§ 27.51, 27.73 and 27.1587.

(ii) Procedures.

(A) In establishing the maximum takeoff and landing altitude, the following tests are normally required:

(1) Takeoff (§27.51)

(2) Climb (§§ 27.65 and 27.67)

(3) Performance at minimum operating speed (§ 27.73)

(4) Landing (§ 27.75)

(5) Limiting height-speed envelope (§ 27.79)

(6) IGE controllability (§ 27.143c)

(7) Cooling (§§ 27.1041, 27.1043 and 27.1045)

(8) Engine operating characteristics (§ 27.939)

Specific guidance on test methodology and data requirements is provided in applicable paragraphs of this AC.

(B) As detailed in subparagraph b(2) above, the maximum allowable extrapolation of H-V, IGE controllability and engine operating characteristics is ±2,000 feet. Therefore, the maximum takeoff and landing altitude presented in the RFM is not normally more than 2,000 feet above the density altitude experienced at the high altitude test site, or for CAR 6, Amendment 6-7 and subsequent, unless test results were demonstrated to at least 7,000 feet.

(C) If IGE controllability is demonstrated to at least 17 knots of wind at 7,000 feet, hover capability above 7,000 feet may be presented provided that the maximum demonstrated safe wind for takeoff and landing above 7,000 feet is specified in the RFM.

(D) The requirements for data collection and presentation in the RFM vary depending upon the certification basis of the rotorcraft. These requirements are presented by regulation and amendment in figures AC 27.45-1 and AC 27.45-2.

(E) The maximum takeoff and landing altitude may be extrapolated no greater than the values given in paragraph b(2) and not above the lowest limiting altitude resulting from the requirements of subparagraph A of this paragraph.

(4) Temperature Effects.

(i) Background.

(A) In the past, approved analyses were frequently accepted for determining the extreme temperature effects on performance and flight characteristics. With the introduction of newer, higher performance rotorcraft, advanced rotor blade designs, higher airspeeds, and higher blade tip Mach numbers, the previous methods have proven to be insufficient. Therefore, the performance and flight characteristics should be validated at extreme temperatures; however, analysis may be permitted if a suitable methodology is demonstrated.

(B) Various FAA/AUTHORITY cold weather programs have verified that rotorcraft can be affected by cold temperature in both the performance and flying qualities areas. Hot temperature conditions, although not shown to be as critical for flying qualities, should be given consideration.

(C) Additionally, design deficiencies surfaced when the rotorcraft were exposed to temperature extremes and some of these difficulties were severe enough to require the redesign of equipment and/or materials. Therefore, to satisfy § 27.1309(a), the applicant needs to substantiate the total rotorcraft throughout the foreseeable range of operating temperatures.

(ii) Procedures.

(A) The FAA/AUTHORITY is responsible for verifying the effects of temperature on performance and handling characteristics. A limited flight verification, if necessary, could include spot checks of hover performance, IGE controllability, vibration, simulated power failure, static stability, height-velocity, V_{NE}/V_D evaluations, ground resonance, etc. In addition, systems should be evaluated to determine satisfactory operations.

(B) Extrapolation of test data should only be allowed if the applicant's predicted or calculated data is verified by actual test, but in any case extreme caution should be used for extrapolations that are 10° C below or 20° C above those values tested.

(5) Engine Power - Turboshaft Engine.

(i) Background.

(A) The purpose of rotorcraft performance flight testing is to obtain accurate quantitative flight test performance data to provide flight manual information.

(B) Flight tests are designed to investigate the overall performance capabilities of the rotorcraft throughout its operating envelope. This testing furnishes information to be included in the flight manual and provides a means of validating the predicted performance of the rotorcraft with a minimum installed specification engine.

(C) The power used to complete the flight manual performance must be based on power values no greater than that available from the minimum uninstalled specification engine after it is corrected for installation losses. A minimum uninstalled specification engine is one that, on a test stand under conditions specified by the engine manufacturer, will produce the certificated power at specification temperatures and/or speeds. The specification values may be either a rating or limit. Some engine manufacturers certify an engine to a specified power at a particular engine temperature or speed rating with higher allowable limits. The limit is the maximum value the installed engine is allowed in order to develop the specification power. Prior to installation of each engine in a rotorcraft, the performance is measured by the engine manufacturer. This is done by making a static test run in a test cell and referring the results to standard day, sea level conditions. The performance parameters obtained are presented as uninstalled engine characteristics on a test log sheet. This is commonly referred to as a “final run sheet.” Figure AC 27.45-3 compares a typical engine to one the manufacturer has certified as a minimum uninstalled certified engine.

(D) After engine certification, the engine manufacturer is responsible to ascertain that each engine delivered will produce, as a minimum, the certified power without exceeding specification operating values; therefore, a “final run sheet” is created for every engine produced. Additionally, if needed, arrangements can usually be made with the engine manufacturer to obtain a torque system calibration for individual engines. This will further optimize the accuracy of the engines used in the flight test program. The engine manufacturer will also provide predicted uninstalled power available for the various power ratings. This information may be derived from an engine computer “card deck” and from charts and tables in the engine detail installation manual. These data also provide engine performance for the range of altitudes and temperatures approved for the engine and include methods for correcting this performance for installation effects. The parameters contained in a typical “card deck” are plotted for one engine rating in figure AC 27.45-4.

(E) Several power losses may be associated with installing an engine in a rotorcraft. Typical losses are air inlet losses, gear losses, air exhaust losses, and powered accessory losses such as electrical generators. Additional flight manual performance considerations are the torque indicating system accuracy and torque

needle split. The predicted uninstalled power available engine characteristics cannot be assumed to be the actual power available after the engine is installed in the rotorcraft because this procedure would neglect the installation power losses. It is necessary to know the installation losses in order to determine the flight manual performance. Installation losses are reflected reductions in available power resulting from being installed in a rotorcraft. These losses usually consist of those incurred due to engine inlet and/or exhaust design. The rotorcraft manufacturer conducts tests to confirm the installed specification engine power available on which published performance is based. The specific methods used vary widely between manufacturers but usually include some combination of ground and flight tests. Figure AC 27.45-5 is a typical installed power available chart for one set of conditions.

(F) The installed power available is, in most cases, lower than obtained on a test stand. This is especially true at lower airspeeds where exhaust reingestion may occur and there are changes in airflow routing. The rotorcraft manufacturer may elect to determine the installation losses for different flight conditions to take any airspeed advantages. This is acceptable if, for example, the hover performance is based on the actual power available from an installed minimum specification engine in a hover. Likewise, it is permissible for the rotorcraft manufacturer to determine his climb performance based on the actual power available from an installed minimum specification engine at the published climb airspeed. This will allow the manufacturer to take advantage of, for example, increased inlet efficiency.

(ii) Procedures.

(A) The installed minimum specification engine power output has been predicted and calculated for various flight conditions. It is imperative that the predicted values be verified by actual flight test. The flight test involves obtaining engine performance measurements at various power settings, altitudes, and ambient temperatures. The data should be obtained at the actual flight condition for which the performance is to be presented (i.e., hover, climb, or cruise).

(B) Following a power increase, engine temperature and/or RPM can significantly decrease for a period of time as torque is held constant. Said another way, torque will increase if RPM and/or temperature are held constant. This is a characteristic typical of turbine engines due largely to expansion of turbine blades and reduced clearances in the engine. Some engines may show a temperature increase at constant power due to engine or temperature sensing system peculiarities. An engine will usually establish a stabilized relationship of power parameters in approximately 2 or 3 minutes. For this reason, the following procedure should be used when obtaining in-flight engine data.

(1) To determine the takeoff and 2 ½-minute values, first stabilize the engine at a low power setting. After stabilization, rapidly increase the power demand to takeoff and/or 2 ½-minute power levels. Record the engine parameters as soon as the specification torque, temperature, or speed is attained. Care must be taken not to

exceed a limit. These readings should be obtained approximately 15 seconds after power is initially applied.

(2) To determine the 30-minute and/or maximum continuous power values, approximately 2 to 3 minutes of stabilization time after power is increased is generally used, but up to 5 minutes stabilization time is allowed. The reason for the different procedures is when a pilot requires takeoff or 2 ½-minute power values he is in a critical flight condition and does not have the luxury of waiting for the engine(s) to produce rated power. Stabilization time is allowed for the maximum continuous and 30-minute ratings because these values are not associated with flight conditions for which power is needed immediately.

(C) The in-flight measurements recorded with the engine(s) on the flight test rotorcraft must be corrected downward if the test engine is above minimum specification and corrected upward for a test engine that is below minimum specification. This correction is necessary to verify that a minimum specification engine installed on a production rotorcraft is capable of producing the power values used to compute the flight manual performance without exceeding any engine limit. In addition, if the production rotorcraft's power measurement devices have significant (greater than 3 percent) power error, this error must be accounted for in a conservative manner.

(D) On multiengine rotorcraft, the engine location may result in different installation losses between engines. If this condition exists, multiengine performance should be based on the total power available after considering the different installation losses and with minimum specification engines installed. One-engine-inoperative performance must be based on the loss of the engine which has the lowest installation losses. Additionally, the power losses due to such items as accessory bleed air, particle separators, engine driven accessories, etc., must be accounted for accordingly.

(E) Power available data should be obtained throughout the test program at various ambient conditions. Some engines have devices which restrict the mechanical N_G speed to a constant corrected speed at cold temperatures. Others may limit power to a fuel flow value which would be encountered only at certain ambients. Others may limit by torque limiting devices. Therefore, power available data should be obtained at various ambients to verify that all limiting devices are functioning properly and have not been affected by the installation.

(F) Through use, turbine engine power capabilities decrease with time. This is called engine deterioration. Deterioration is largely a function of the particular engine design, the manner, and the environment in which the engine is operated. There is a need, therefore, to provide a method which can be used in service to periodically determine the level of engine deterioration. A power assurance curve is usually provided to allow the flightcrew to know the power producing capabilities of any engine. A power assurance check is a check of the engine(s) which will determine that the engine(s) can produce the power required to achieve flight manual performance. This check does not have to be done at maximum engine power. Figure AC 27.45-6 is

a typical power assurance curve for an installed engine showing minimum acceptable torque which assures that power is available to meet the rotorcraft flight manual performance. Some power assurance curves have maximum allowable N_G limits that must not be exceeded for a given torque value. An in-flight power assurance check may be used in addition to the pretakeoff check. The validation of either check must be done by the methodology used to determine the installed minimum specification engine power available. For the in-flight power assurance check there must be full accountability for increased efficiency due to such items as inlet ram recovery, absence of exhaust reingestion, etc. A power assurance check done statically and one conducted in-flight must yield the same torque margin(s). An engine may pass power assurance at low power but still may not be capable of producing the rated power values. This occurs when the curve of corrected power and corrected temperature for the engine intersects the minimum uninstalled specification engine curve. If this condition exists, the entire power assurance and power available information may need to be reestablished.

(6) Deteriorated Engine Power - Turboshaft Engine.

(i) Background.

(A) A specific engine model may have been certificated for operation with power which has “normally” deteriorated below specification. This “normal” deterioration refers to a gradual loss in engine performance, possibly caused by compressor erosion, as opposed to a sudden performance loss which may be due to mechanical damage. The application for deteriorated engine power should not be confused with the installed mechanical engine derating which is frequently used to match transmission and engine power capabilities.

(B) The use of deteriorated power is intended to allow continued operations with an engine which is serviceable and structurally sound, although aircraft performance may be depreciated. The useful life of the engine may, therefore, be extended at a dollar savings to the operator.

(C) Although installed performance is the primary topic in this discussion, considerations must be given to other operational characteristics and systems which may be affected by deteriorated engine power. These include:

(1) Engine characteristics (§ 27.939). Surge margin, engine response, and air-restart capability might be affected and should be addressed, but flight testing may not be required depending on the individual engine/aircraft installation and fuel scheduling mechanism.

(2) Performance of customer bleed air systems may be degraded slightly. No problem would be anticipated unless certain items within the system depend on a critical P_C for their function.

(3) The maximum attainable gas producer speed, and thus power available under certain ambients, may be affected if P_C is an input to the fuel scheduling mechanism.

(4) Systems for surge protection which schedule on P_C such as bleed valves, flow fences, bleed bands, and variable inlet guide vanes may be influenced. The effect would normally be negligible unless when installed, the installation losses, combined with reduced P_C because of deterioration, would cause the bleed device to open and reduce power at any one of the engine ratings.

(ii) Procedures.

(A) The need for flight tests to verify predicted power available with deteriorated engines depends on the scope of testing which occurred during initial certification. If the original rotorcraft certification included flight testing as described in paragraph (5) (engine power-turboshaft engines) herein for validation of power available, the need for a demonstration with deteriorated engines is greatly diminished and perhaps eliminated.

(B) If flight testing to verify deteriorated engine power available is deemed necessary, the procedure used would be the same as that described in paragraph (5) (engine power-turboshaft engines), except that the data would be corrected downward to a deteriorated engine runline. Efforts should concentrate on obtaining data in areas of the operational envelope where maximum gas producer speed is likely to be attained, or where bleed valves or other devices which schedule on gas producer discharge pressure are likely to function. On many installations maximum gas producer speed will occur with cold temperatures and high altitudes; bleed valves and other devices which schedule on gas producer discharge pressure are most likely to function and reduce power on a hot day at low altitude.

(C) The adjustments to the normal power assurance check procedures for deteriorated engines will be influenced by the preferences of the aircraft manufacturer and by any special stipulations of the engine certification established as a condition for the engine to remain in service when below specification. Possibly, more stringent and more complicated engine monitoring procedures will be introduced when allowing the use of deteriorated power; for example, an in-flight trend monitoring program with the associated bookkeeping duties may be required. Such an in-flight procedure must be evaluated by flight tests as described in paragraph (5) (engine power-turboshaft engines) herein. Normally, however, the manufacturer would be expected to present a modification, or extension of the power assurance procedure already in place for the specification engine, which could eliminate the need for flight test evaluation.

AC 27.45A. § 27.45 (Amendment 27-21) GENERAL.

a. Explanation. Amendment 27-21 adds § 27.45(f) to the regulation. This section establishes the requirement for furnishing power assurance information for turbine powered rotorcraft. This information is to provide the pilot a means of determining, prior to takeoff, that each engine will produce the power necessary to achieve the performance presented in the rotorcraft flight manual (RFM).

b. Procedures. All of the policy material pertaining to this section remains in effect. In addition, the power assurance information included in the RFM should be verified. Although this requirement is normally met with a power assurance curve, other methods of compliance may be proposed.

AC 27.45B. § 27.45 (Amendment 27-29) GENERAL.

a. Explanation. Amendment 27-29 added the requirements for certification of 30-second/2-minute One Engine Inoperative (OEI) power ratings. For rotorcraft approved for the use of 30-second/2-minute OEI, partial power checks currently accomplished with approved power assurance procedures for lower power levels may not be sufficient to guarantee the ability to achieve the 30-second power level.

b. Procedures. Information provided in Appendix 1 of this AC includes guidance material on power assurance procedures to assure that the OEI power level can be achieved

CERTIFICATION BASIS

		FAR 27			CAR 6			CAR 06
Rqmts		**27-Amdt. 21**	**27-Amdt. 2**	**Original**	**6-Amdt. 7**	**6-Amdt. 4**	**Original**	**Original**
H-V Ref. 27.25 27.79 27.1519 27.1587 6.116 6.741 6.743	**Test Conditions**	1. MGW Sea Level 2. Max. OGE wt. Lesser of: a. Max. alt. cap. b. 7000' Hd	1. MGW Sea Level 2. Wt. selected by applicant at lessor of: a. Max. alt. cap. b. 7000' Hd	1. MGW Sea Level 2. Wt. selected by applicant at lessor of: a. Max. alt. cap. b. 7000' Hd	1. MGW Sea Level 2. Wt. selected by applicant at lessor of: a. Max. alt. cap. b. 7000' Hd	1. MGW Sea Level 2. Wt. selected by applicant max. t.o. and ldg. alt.	1. MGW Sea Level 2. Wt. selected by applicant at max. t.o. and ldg. alt.	1. No specific wt. and alt. requirements.
	RFM	3. H-V is perf. Info. 4. Max. alt. For which H-V is valid	3. H-V is perf. info. 4. If H-V wt is less than IGE wt., wt. becomes limitation for t.o./ldg.	3. H-V is perf. info.	3. H-V is perf. info.	3. H-V is perf. info.	3. H-V is operating limitation.	H-V is operating limitation.
AC 27-1B Para AC 27.45 & AC 27.51	**Remarks**	5. If H-V is less than OGE wt., H-V wt. becomes limit. 6. Applicant is encouraged to demo H-V to WAT limits. 7. Hover data may be shown above 7000' if H-V & IGE are demo'd to 7000'						

FIGURE AC 27.45-1 H-V Requirements

CERTIFICATION BASIS

		FAR 27			CAR 06
Rqmts		**27-Amdt. 21**	**Original**	**Original**	**Original**
IGE CONTROL Ref. 27.25 27.143 27.1587 AC 27-1B Para AC 27.45 & AC 27.143	**Test Conditions**	1. MGW Sea Level 2. Max. IGE wt. Lesser of: a. Max. alt. cap. b. 7000' Hd 3. Critical CG 4. Critical Rotor RPM 5. Wind of not less than 17 kts.	1. MGW Sea Level 2. Wt. selected by applicant to max. t.o. and ldg. alt. 3. Critical CG 4. Critical Rotor RPM 5. Critical wt. 6. Wind of not less than 20 mph	1. MGW Sea Level 2. Max. approved wt. for t.o./ldg at alt above sea level. 3. Critical CG 4. Critical Rotor RPM 5. Wind not less than 20 mph.	1. No specific requirement.
	RFM	6. Max. safe wind is perf. info.	7. Max. safe wind is perf. info.	6. Max. safe wind is perf. info.	
	Remarks	7. If 17 kts. wind demo'd to alt. less than 7000', a corresponding WAT limit must be established.			

FIGURE AC 27.45-2 IGE CONTROLLABILITY REQUIREMENTS

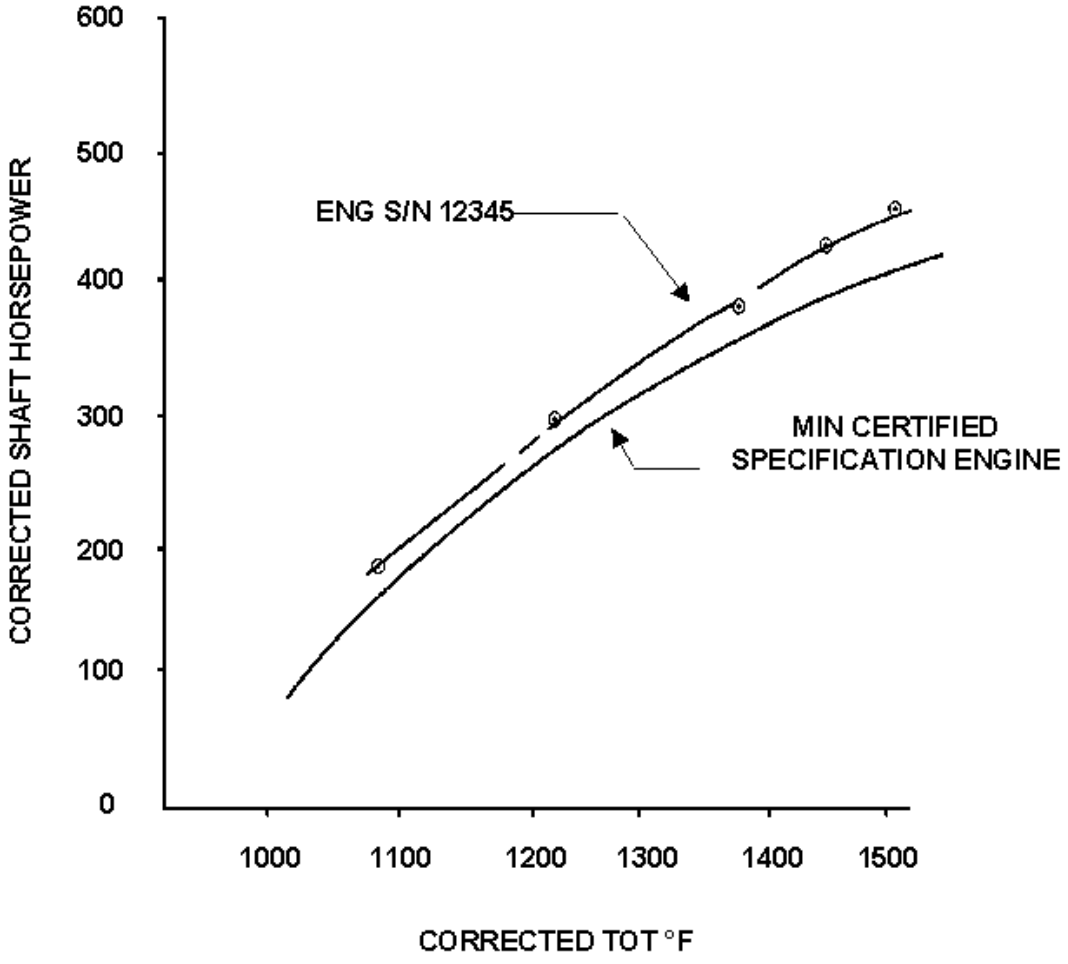

FIGURE AC 27.45-3 SHAFT HORSEPOWER VS TURBINE OUTLET TEMPERATURE - SEA LEVEL STANDARD DAY

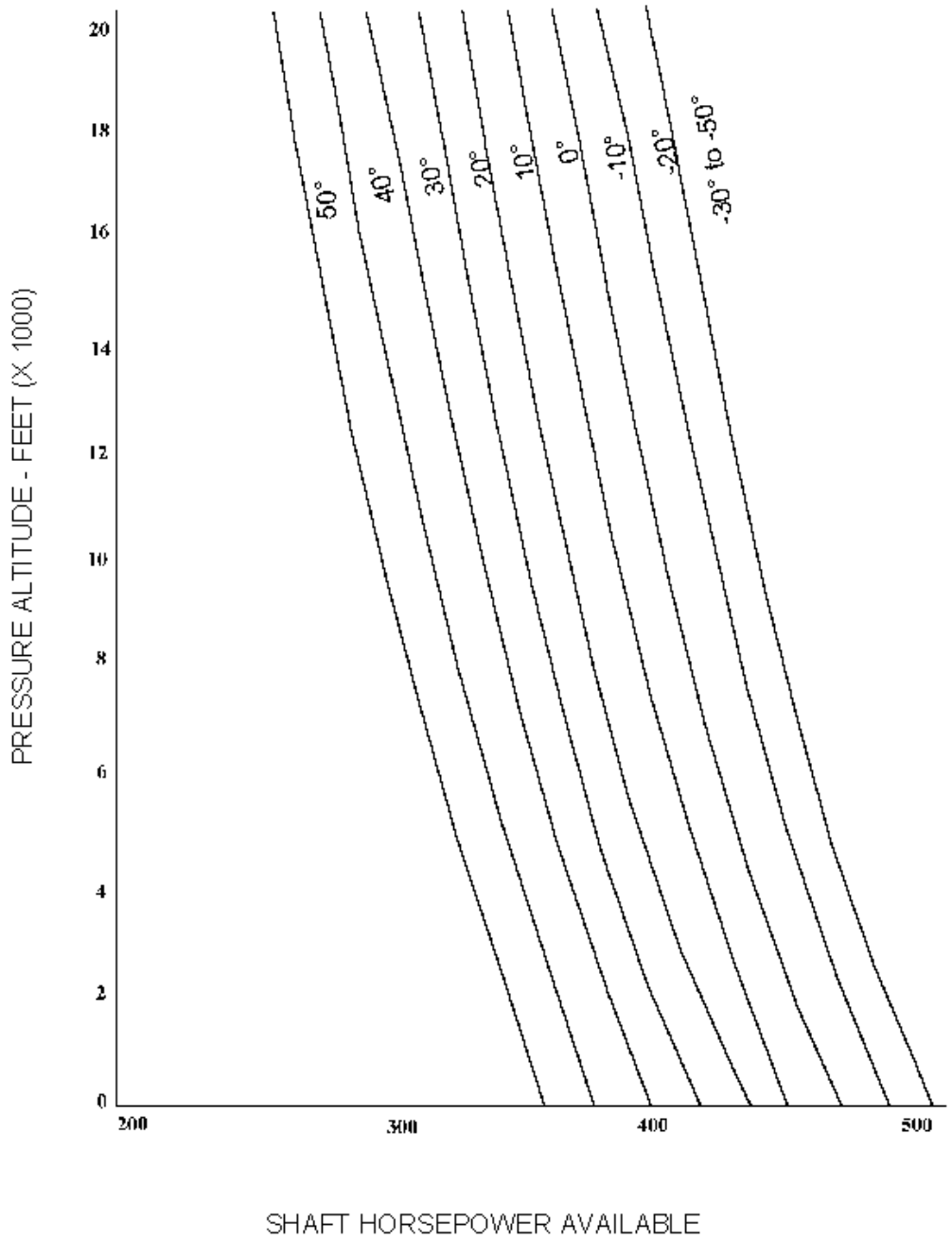

FIGURE AC 27.45-4 UNINSTALLED TAKEOFF POWER AVAILABLE

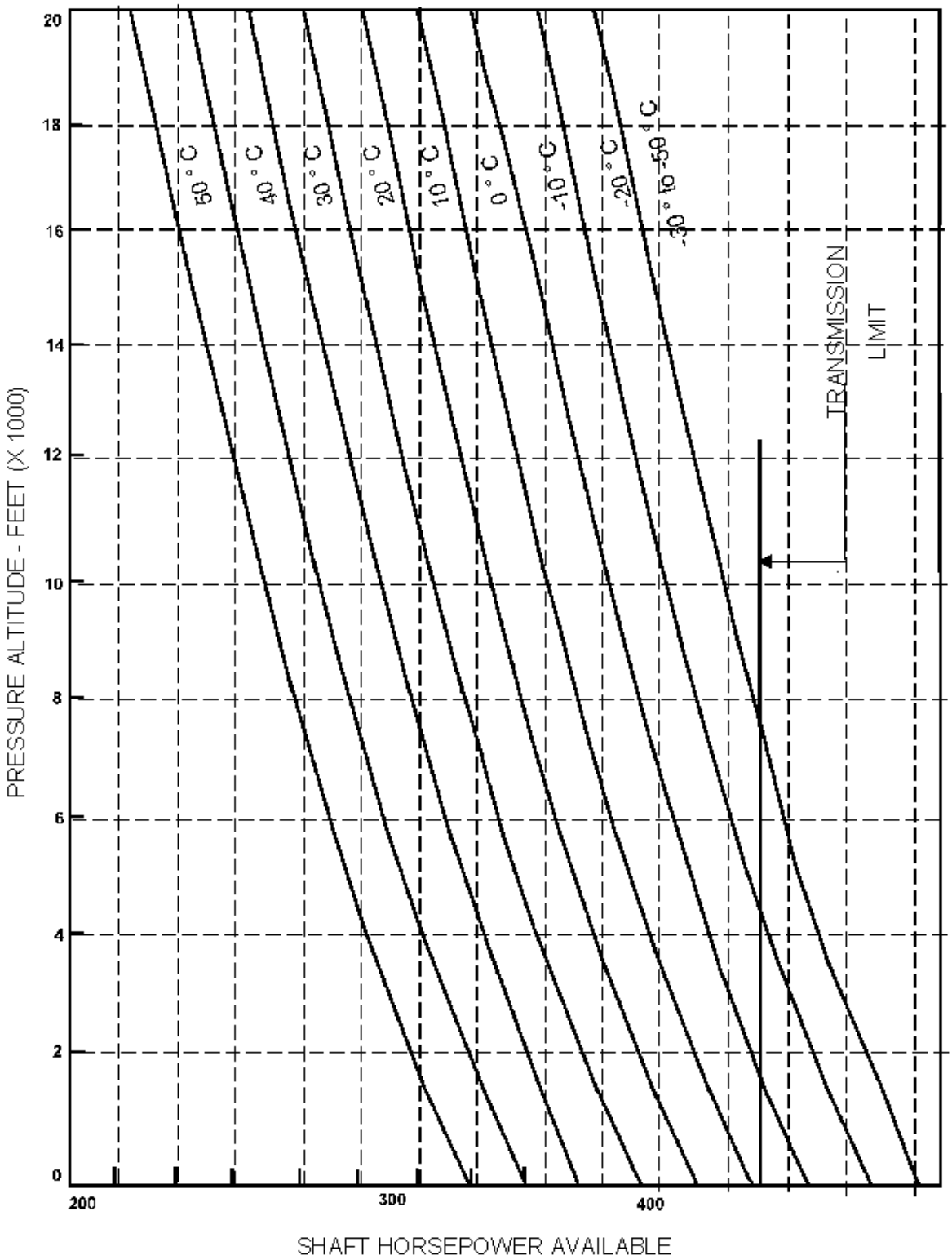

FIGURE AC 27.45-5 INSTALLED TAKEOFF POWER AVAILABLE, ANTI-ICE OFF, 400 RPM

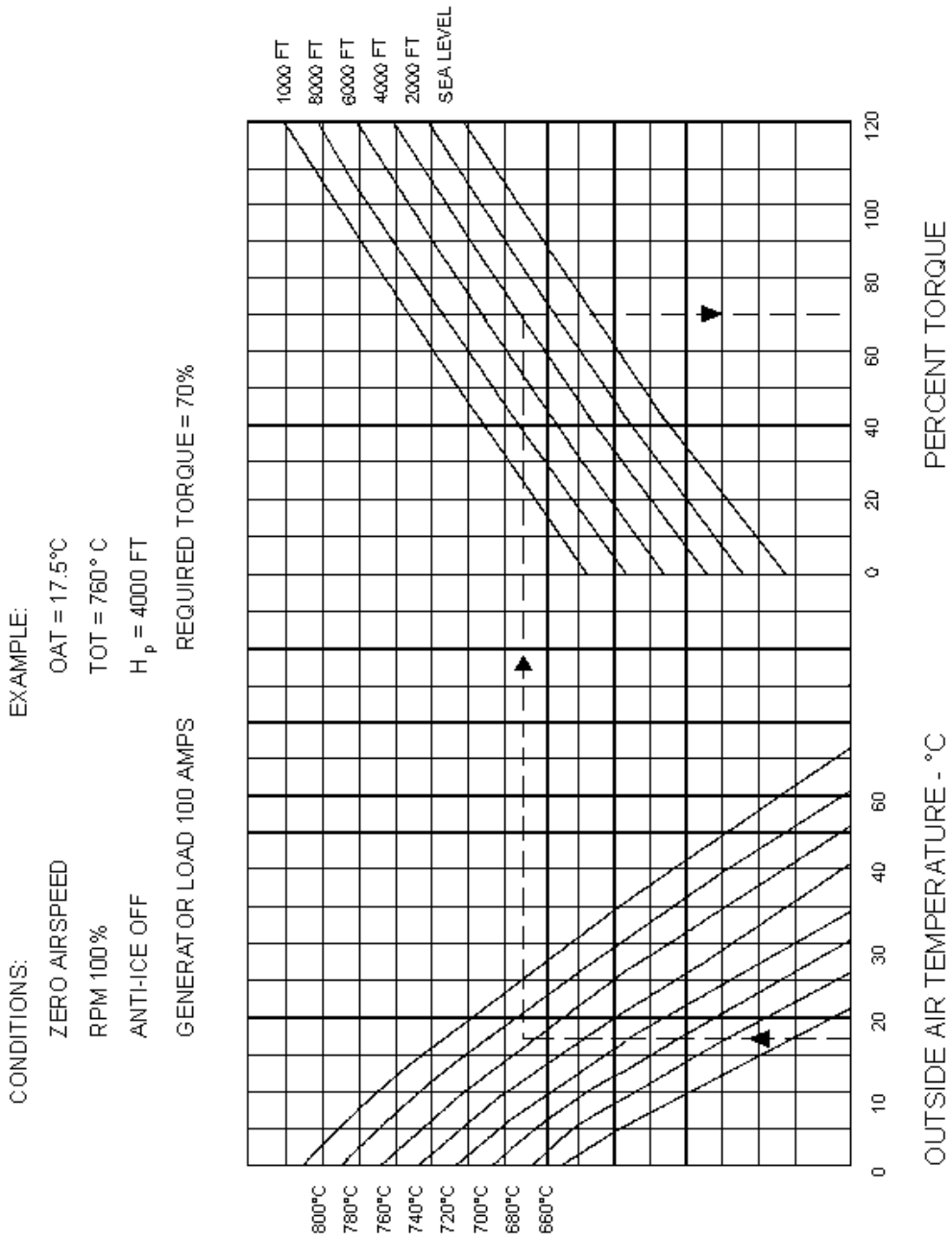

FIGURE AC 27.45-6 POWER ASSURANCE CHECK CHART

[See new AC 27.49 (dated 9/17/2009) posted as separate document in RGL with this Master AC.]

AC 27.51. § 27.51 TAKEOFF.

[See new AC 27.51A (dated 9/17/2009) posted as separate document in RGL with this Master AC.]

a. Explanation. Section 27.51 details the conditions under which takeoff data must be obtained. The flight manual must contain the technique(s) to be used to obtain the published flight manual takeoff procedures. Technique should not be confused with exceptional pilot skill and/or alertness as mentioned in § 27.51. Because rotorcraft differ, different pilot techniques are sometimes required to achieve the safest and most optimum takeoff performance. The recommended technique that is published in the flight manual must be determined to be one that the operational pilot can duplicate using the minimum amount of type design cockpit instrumentation and the minimum crew. Only rotorcraft takeoff techniques will be covered in this section.

b. Background.

(1) Certain special takeoff techniques are necessary when a rotorcraft is unable to take off vertically because of altitude, weight, power effects, or operational limitations. The recommended technique used to take off under such conditions is to accelerate the rotorcraft in-ground-effect (IGE) to a predetermined airspeed prior to climbout. Takeoff tests are performed to determine the best repeatable technique(s) for a particular rotorcraft over the range of weight and altitude for which certification is requested.

(2) Utilizing the total power available to execute a takeoff may not be operationally feasible due to such items as HV or aircraft attitude constraints. In such situations, hover power required plus some power increment may be the maximum recommended for use.

(3) Wheel or skid height should be not less than that demonstrated satisfactorily for the high speed, low altitude portion of the HV curve, or that height below which ground contact may occur when accomplishing takeoff procedures.

(4) For rotorcraft fitted with wheels, a running takeoff procedure may be accepted.

c. Procedures.

(1) There are different takeoff profiles which may be used to complete a maximum performance takeoff in a rotorcraft. The manufacturer will normally determine which method is best for a particular rotorcraft. The most commonly accepted method is the hover and level acceleration technique. In this technique, the rotorcraft is stabilized in a hover at the reference height. From the stabilized hover, the rotorcraft is accelerated to the climbout airspeed using the predetermined takeoff power. When the desired climbout airspeed is achieved, the rotorcraft is rotated and the climbout is accomplished at the scheduled airspeed(s) and constant rotor RPM. Power adjustments may be accomplished to maintain the targeted power except where procedure requires high workload outside the cockpit (i.e., that portion of takeoff where horizontal acceleration close to the ground has pilot scan outside the cockpit and

adjustment of engine torque or temperature would require an undue increase in workload). The recommended takeoff procedure must be demonstrated to remain clear of the HV "avoid" areas without requiring exceptional piloting skill or exceptionally favorable conditions.

(2) The hover reference height is established as the minimum skid or wheel height above the takeoff surface from which a takeoff can consistently be accomplished in zero wind without contacting the runway surface. The takeoff must be accomplished with power fixed at the power required to hover at the hover reference height and must not require exceptional piloting skill to avoid runway surface contact.

[See new AC 27.51A (dated 9/17/2009) posted as separate document in RGL with this Master AC.]

AC 27.65. § 27.65 (Amendment 27-14) CLIMB: ALL ENGINES OPERATING.

a. Explanation.

(1) Rotorcraft other than helicopters.

(i) Section 27.65 requires that the steady rate of climb be determined for each rotorcraft other than helicopter with maximum continuous power on each engine for the range of weights, altitudes, and temperatures for which certification is requested. Equivalent levels of safety have been found wherein the applicant was allowed to select a climb airspeed that was not the actual V_Y. The selected airspeed must be consistent with the speed used to show compliance with such items as cooling, stability, etc. The rate of climb resulting from the selected climb airspeed versus that from the actual V_Y shall not differ to an extent that a pilot will be encouraged, by appreciable increases in climb performance, to fly a climb airspeed different from that published in the flight manual.

(ii) For rotorcraft other than helicopters, the climb performance data obtained above must be used to show that a minimum climb gradient can be achieved for each weight, altitude, and temperature within the range for which certification is required. This gradient must be at least 1:10 if testing is done to determine the required takeoff distance over a 50-foot obstacle. If this option is selected, an explanation of the takeoff distance determination requirements and procedures may be found in paragraph AC 29.63 of AC 29-2C.

(iii) If takeoff distance is not determined, the minimum climb gradient must be 1:6 for standard sea level conditions.

(2) For helicopters, V_Y must be determined for standard sea level conditions at maximum weight using maximum continuous power on each engine. Although not required, the steady rate of climb may be determined using the procedure in paragraph AC 27.65c of this section (Procedure to Determine All-Engine-Operating Climb Performance).

(3) For helicopters, if V_{NE} at any altitude is less than the maximum gross weight sea level standard day condition V_Y, the steady rate of climb must be determined at the climb speed(s) selected by the applicant not to exceed V_{NE}. The climb performance must be determined from 2,000 feet below the altitude from where V_{NE} intersects V_Y up to the maximum altitude for which certification is requested. This should be done utilizing maximum continuous power on each engine with the landing gear retracted.

b. Procedure to Determine V_Y.

(1) Sawtooth climbs may be used to determine V_Y. If such a technique is used, climbs should be flown in pairs on opposite headings 90° to the wind at the test altitude. This procedure will minimize any windshear effects. All testing must be done in smooth air. Windshear is usually an indication of unstable air or a temperature inversion and must also be avoided. The climbs are flown on reciprocal headings for approximately 5 minutes or through an altitude band using maximum continuous power at a constant airspeed. Periodic power adjustments may be necessary. Additional reciprocal heading climbs must also be conducted at different airspeeds above and below the airspeed at the lowest point of the power required versus airspeed curve. This technique can be repeated at different altitudes to obtain V_Y throughout the altitude range.

(2) Level flight performance (speed power) may also be used to determine V_Y. The testing should be done in smooth air. The advantage of this method is that less time is required, and the accuracy is equivalent to the sawtooth climb method. The test can be repeated at various altitudes to determine the V_Y throughout the altitude range desired for the rotorcraft. The test at each altitude should be conducted at a constant weight over sigma (W/σ). The test is normally started at the desired W/σ with maximum continuous power, or at V_{NE}, in level flight. A series of points should be taken, reducing airspeed 10 to 15 knots between points, with the lowest speed point around 20 to 30 knots. Weight should be computed for each point and the test altitude adjusted to maintain a constant W/σ. After the data are reduced to standard day conditions, the minimum power required airspeed will be the V_Y speed.

(3) Prior to the flight test, the rotorcraft should be ballasted to the desired gross weight and the critical center of gravity. The airspeed should be stabilized prior to data acquisition. Data to be recorded includes time, altitude, airspeed, ambient temperature, engine parameters, torque(s), rotor RPM, fuel reading, aircraft heading, external configuration, etc. Power setting, weight, and climb airspeed should be planned prior to flight. For some turboshaft engines, temperature and/or engine speed limits may be reached prior to a limiting torque. The test team should verify that the resulting power utilized in these tests closely approximates the power producing capabilities of a minimum installed specification engine.

c. Procedure to Determine All-Engine-Operating Climb Performance.

(1) Background. Continuous climbs are conducted at the appropriate climb airspeeds as outlined above in order to validate the rotorcraft's climb performance. By-products are a qualitative evaluation of the rotorcraft handling characteristics in a climb and engine data to assist in the determination of installed power available.

(2) Techniques. The climbs are conducted on reciprocal headings at the established airspeed(s) through the target altitude range. The same parameters are recorded as during sawtooth climbs. The rotorcraft will usually climb very rapidly during the first few thousand feet; therefore, the data acquisition method must be timely if accurate results are expected. This procedure is usually repeated at weight extremes. The resulting data must then be corrected for power and weight. Power and weight corrections are satisfactory, provided the test powers and weights closely approximate the target values to make the weight and power corrections small. Once this data is finalized and corrected for all the flight test variables, interpolation for intermediate weights can be made with a high degree of reliability. If the rotorcraft has any stability augmentation system, vent systems, etc., which may influence the climb performance, then it must be accounted for. Caution should be taken that anti-ice, air-conditioning, etc., are not on unless the performance is being established specifically for those conditions.

AC 27.65A. § 27.65 (Amendment 27-33) CLIMB: ALL ENGINES OPERATING.

a. Explanation. Amendment 27-33 added the requirement to determine the steady rate of climb, for helicopters, from sea level up to the maximum altitude for which certification is requested. Although not specifically stated in the rule, the rate of climb should be determined at V_Y or, if V_{NE} at any altitude is less than the maximum gross weight sea level standard day condition V_Y, the steady rate of climb at these altitudes must be determined at a climb speed(s) selected by the applicant not to exceed V_{NE}.

b. Procedures. The policy material pertaining to the procedures outlined in this section remain in effect.

AC 27.67. § 27.67 (Amendment 27-23) CLIMB: ONE ENGINE INOPERATIVE.

a. Explanation.

(1) Section 27.67 requires that for multiengine normal category rotorcraft, the steady rate of climb or descent with one engine inoperative must be determined at V_Y (or at the speed for minimum rate of descent) for maximum gross weight.

(2) The rate of climb (or descent) will be determined with the critical engine inoperative and the remaining engine(s) at maximum continuous or 30-minute minimum specification installed power available values. The landing gear should be retracted if it is retractable.

b. Procedures.

(1) The procedure discussed in paragraph AC 27.65 for all-engines-operating climb performance is also applicable to the OEI condition. For twin-engine rotorcraft that are shown not to have a “critical engine” with respect to performance characteristics, both engines may be used to simulate the appropriate single-engine power available during these tests.

(2) Adequate testing must be accomplished to determine the rotorcraft’s OEI climb performance at maximum gross weight for all variations in altitude and temperature for inclusion in the Rotorcraft Flight Manual.

44

AC 27.71. § 27.71 (Amendment 27-~~21) GLIDE PERFORMANCE.~~ AUTOROTATION PERFORMANCE.

[See AC 27.71 amended title dated 9/17/2009) posted as separate document in RGL with this Master AC.]

a. Explanation.

(1) Performance capabilities during stabilized autorotative descent are useful tools to assist the pilot when all engines fail. This information is also useful in determining the suitability of available landing areas along a given route segment.

(2) Two speeds are of particular importance, the speed for minimum rate of descent and the speed for best angle of glide. These speeds along with glide distance information are required as flight manual entries per § 27.1587. The speed for minimum rate of descent is useful for engine failure conditions at higher altitudes and the pilot is required to perform some time-related task, engine restart, float inflation, radio calls, etc. The speed for best angle of glide is a somewhat higher speed that is of particular use when it is necessary to reach a distant landing area. These speeds, when utilized in conjunction with appropriate rotor RPM and glide angle (or rate of descent) can be used to calculate the maximum horizontal distance available from a particular altitude assuming zero wind conditions.

(3) A third speed, recommended autorotation speed, may be provided in addition to minimum rate of descent speed and maximum glide angle speed. The recommended speed for autorotation is usually optimized to assure an effective flare capability and yet be slow enough to allow a controlled, relatively slow touchdown condition. Recommended autorotation speed is ordinarily between the minimum rate of descent and maximum glide angle speeds. The recommended autorotation speed may be provided in the Rotorcraft Flight Manual. The relationship between minimum rate of descent, best glide angle, and recommended autorotation speed is shown in figure AC 27.71-1.

(4) Forward center of gravity is usually critical; however, center of gravity effects should be spot-checked to confirm this for a given design.

b. Procedures.

(1) Tests are conducted at speeds which bracket the anticipated speeds for minimum rate of descent and best glide angle. On a power required plot, the speed for minimum power required approximates the speed for minimum rate of descent. The speed for maximum range glide may be estimated by drawing a tangent from the origin to the power required curve.

(2) Autorotative performance tests may be conducted in conjunction with the climb performance tests. The required data are similar for both tests and it is sometimes convenient and efficient to run alternating climbs and descents through a desired altitude band. Descents should be conducted on reciprocal headings and results averaged in the same manner as climb performance tests.

(3) A reduction in rotor RPM from the normal power-on value may enhance autorotative performance. If the applicant wishes to develop autorotative performance at RPM values significantly below the governing or power-on range, the practicality of reducing and controlling RPM at the lower value and of then increasing RPM as a landing is approached, must be considered. At low weights and low density altitudes, full down collective may automatically produce lower RPM values and this condition is, of course, acceptable provided the approved power-off RPM range is not exceeded.

(4) During autorotation tests, care must be taken to make certain that no engine power is delivered to the rotor drive system since a very small amount of power can have a large effect on descent performance.

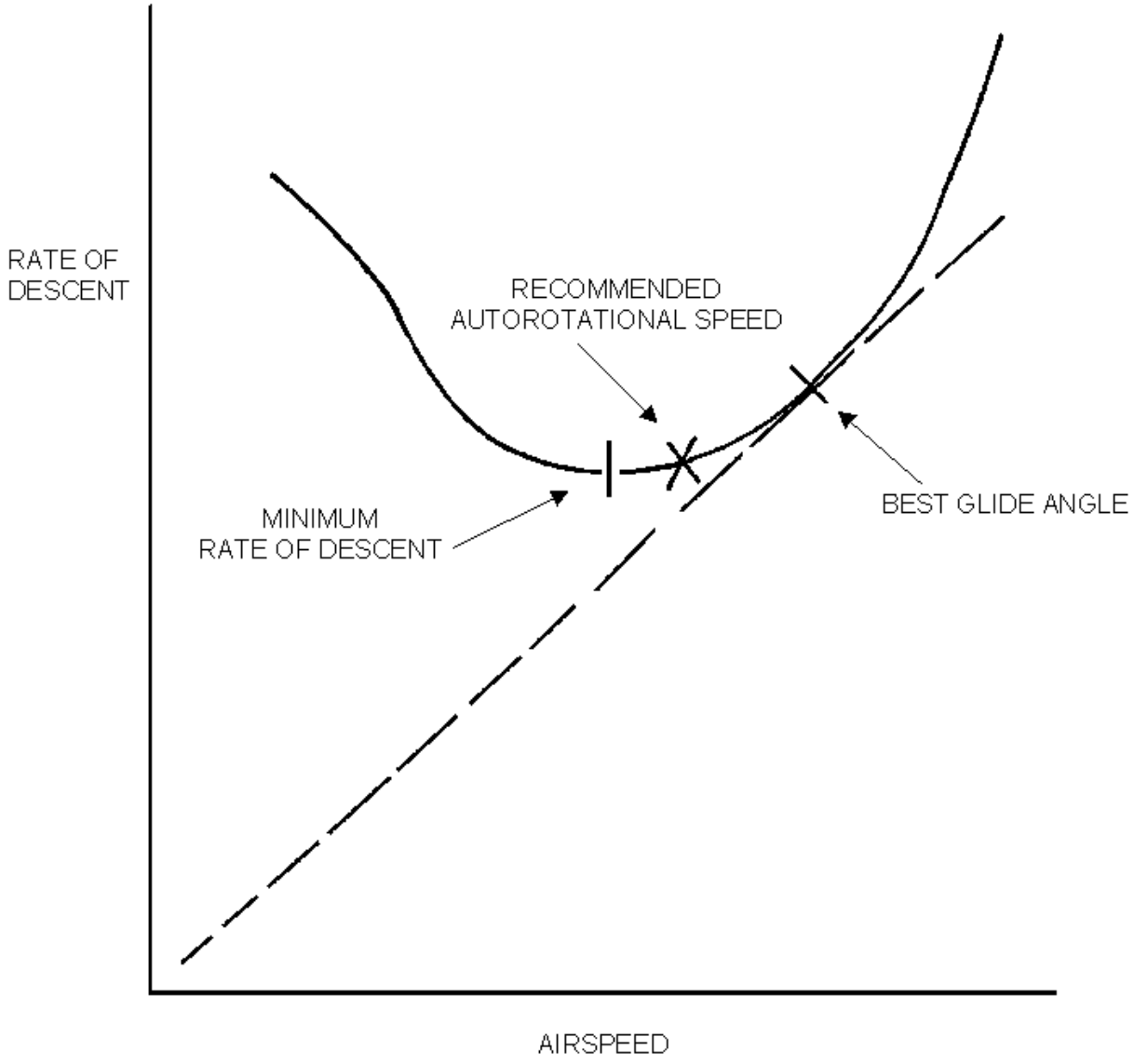

FIGURE AC 27.71-1 AUTOROTATIONAL CHARACTERISTICS - TYPICAL

AC 27.73. § 27.73 PERFORMANCE AT MINIMUM OPERATING SPEED. (thru amendment 27-43; effective with amendment 27-44 see AC 27.49). [See amendment to AC 27.73 (dated 9/17/2009) posted as separate document in RGL with this Master AC.]

a. Explanation.

(1) The word “hover” applies to a rotorcraft that is airborne at a given altitude over a fixed geographical point regardless of wind. Pure hover is accomplished only in still air. For the purpose of this manual, the word “hover” will mean pure hover.

(2) The regulatory requirement for hover performance, § 27.73, refers to hover in ground effect (IGE). For some applications, such as external load operations, hover performance out-of-ground effect (OGE) is necessary; however, it is not required by this section. Hover OGE is that condition, where an increase in height above the ground will not require additional power to hover. Hover OGE is the absence of measurable ground effect. It can be less than one rotor diameter at low gross weight increasing significantly at high gross weight. The lowest OGE hover height at gross weight may be approximated by placing the lowest part of the vehicle one and one-half rotor diameters above the surface.

(3) The objective of hover performance tests is to determine the power required to hover at different gross weights, ambient temperatures, and pressure altitudes. Using nondimensional power coefficients (C_p) and thrust coefficients (C_t) for normalizing and presenting test results minimizes the amount of data required to cover the rotorcraft’s operating envelope.

(4) Hover performance tests must be conducted over a sufficient range of pressure altitudes and weights to cover the approved ranges of those variables for takeoff and landing. Additional data should be acquired during cold ambient temperatures, especially at high altitudes, to account for possible Mach effects.

(5) The hover ceiling for which data should be obtained and subsequently presented in the flight manual should be the same height consistent with the minimum hover height demonstrated during the takeoff tests. Refer to paragraph AC 27.51 for the procedure to determine this hover height.

b. Procedures.

(1) Two methods of acquiring hover performance data are the tethered and the free flight techniques. The tethered technique is accomplished by tethering the rotorcraft to the ground using a cable and load cell. The load cell and cable are attached to the ground tie-down and to the rotorcraft cargo hook. The load cell is used to measure the rotorcraft’s pull on the cable. Hover heights are based on skid or wheel height above the ground. During tethered hover tests, the rotorcraft should be at light gross weight. The rotorcraft will be stabilized at a fixed power setting and rotor speed at the appropriate skid or wheel height. Once the required data are obtained, power should be varied from the minimum to the maximum allowed at various rotor RPM. This technique will produce a large C_t/C_p spread. The load cell reading is recorded for each

stabilized point. The total thrust the rotor produces is equal to the rotorcraft's gross weight plus the weight of the cables and load cell plus cable tension. Care must be taken that the cable tension does not exceed the cargo hook limit or load capacity of the tie-down. For some rotorcraft, it may be necessary to ballast the rotorcraft to a heavy weight in order to record high power hover data.

(2) The pilot maintains the rotorcraft in position so that the cables and load cell are perpendicular to the ground. To ensure the cable is vertical, two outside observers, one forward of the rotorcraft and one to one side, can be used. Either hand signals or radio can be used to direct the pilot. The observers should be provided with protective equipment. Positioning can also be accomplished by attaching two accelerometers to the load cell which sense angle or movement along the longitudinal and lateral axes. Any displacement of the load cell will be reflected on instrumentation in the cockpit, and by reference to this instrumentation, the rotorcraft can be maintained in the correct position. Increased caution should be utilized as tethered hover heights are decreased because the rotorcraft may become more difficult to control precisely. The tethered hover technique is especially useful for OGE hover performance data because the rotorcraft's internal weight is low and the cable and load cell can be jettisoned in the event of an engine failure or other emergency.

(3) To obtain consistent data, the wind velocity should be less than 3 knots as there are no accurate methods of correcting hover data for wind effects. Rotorcraft with high downwash velocities may tolerate higher wind velocities. The parameters usually recorded at each stabilized condition are:

(i) Engine torque.

(ii) Rotor speed.

(iii) Ambient temperatures.

(iv) Pressure altitude.

(v) Fuel used (or remaining).

(vi) Load cell reading.

(vii) Generator(s) load.

(viii) Wind speed and direction.

As a technique, it is recommended the rotorcraft be loaded to a center of gravity near the hook to minimize fuselage angle changes with varying powers. All tethered hover data should be verified by a limited spotcheck using the free flight technique. The free flight technique as contained in paragraph AC 27.73b(4) will determine if any problems,

such as load cell malfunctions, have occurred. The free flight hover data must fall within the allowable scatter of the tethered data.

(4) If there are no provisions or equipment to conduct tethered hover tests, the free flight technique is also a valid method. The disadvantage of this technique as the primary source of data acquisition is that it is very time consuming. In addition a certain element of safety is lost OGE in the event of an emergency. The rotorcraft must be reballasted to different weights to allow the maximum C_t/C_p spread. When using the free flight technique, either as a primary data source or to substantiate the tethered technique, the same considerations for wind, recorded parameters, etc., as used in the tethered technique apply. Free flight hover tests should be conducted at CG extremes to verify any CG effects. If the rotorcraft has any stability augmentation system which may influence hover performance, it must be accounted for.

(5) It is extremely difficult to determine when a rotorcraft is hovering OGE at high altitudes above ground level since there is no ground reference. In a true hover, the rotorcraft will drift with the wind. Numerous techniques have been tried to allow OGE hover data acquisition at high altitudes, all of which have resulted in much data scatter. Until a method is proposed and found acceptable to the FAA/AUTHORITY, OGE hover data must be obtained at the various altitude sites where IGE hover data are obtained. Hover performance can usually be extrapolated up to a maximum of 4,000 feet.

AC 27.75. § 27.75 (Amendment 27-14) LANDING.

[See new AC 27.75A (dated 9/17/2009) posted as separate document in RGL with this Master AC.]

a. Explanation.

(1) This rule incorporates all of the landing requirements for Part 27 rotorcraft.

(2) As with other flight maneuvers, landings must be accomplished with acceptable flight and ground characteristics using normal pilot skills. Reasonable sampling and extrapolation methods are, of course, allowed. General guidance on those subjects is given in paragraph AC 27.45. As in other performance areas, engines must be operated within approved limits.

(3) Landing. Approach and landing path requirements are stated in general terms in paragraphs (a)(1) and (a)(2) of § 27.75. The approach path must allow smooth transition for a one-engine-inoperative landing and adequate clearance from potentially hazardous HV combinations.

(4) All-engine-out landing. Section 27.75(b) contains the certification requirement for “last” engine failure and all-engines-inoperative landing. The rule states that it must be possible to make a safe landing after complete power failure during normal cruise. It is not intended that all engines be failed simultaneously, although complete power failure has occurred in twin-engine rotorcraft with Category A engine isolation. This requirement assures that in the event of cockpit mismanagement, fuel

exhaustion, improper maintenance, fuel contamination, or unforeseen mechanical failures, a safe autorotation entry can be made and a safe power-off landing can be affected. Two separate aspects of this rule are normally evaluated at different times during the test program. The “last” engine failure is normally evaluated during cruise or V_{NE} engine failure testing where instrumentation and critical loading have been established for those test conditions. The all-engine-out landing is ordinarily conducted in conjunction with an HV or landing distance phase where ground instrumentation and safety equipment are available.

b. Procedures.

(1) Instrumentation/Equipment. Aircraft instrumentation may include engine and flight parameters, control positions, power lever position, and landing gear loads. A record of rotor RPM at touchdown is necessary to assure it does not exceed transient limits. Rotor RPM at touchdown may be lower than the minimum transient limit for flight, provided stress limits are not exceeded. A crash recovery team with the support of a fire engine is highly desirable.

(2) The one-engine-inoperative landing is similar in many respects to the HV tests described in paragraph AC 27.79. Most of the comments, cautions, and techniques for HV also apply here even though the typical flight conditions are less critical than limiting HV points due to a lower power level and an established rate of descent. The approach is made at a predetermined speed with one engine inoperative. The speed is reduced and the rotorcraft is flared to a conventional one-engine-inoperative landing.

(3) Power. Power should be limited to minimum specification values on the operating engine(s). This may be accomplished by adjustment of engine topping to minimum specification values for the range of atmospheric variables to be approved. This is frequently done by installing an adjustable device in the throttle linkage with a control in the cockpit so that engine topping can be accurately adjusted for varying ambient conditions. With such a device in the control system it becomes vitally important to check topping power prior to each test sequence.

(4) Aircraft Loading. Aft center of gravity is usually most critical because visibility constraints limit the degree to which the pilot can see the landing surface during the flare. If a weight effect is shown, a minimum of two weights should be flown at each test altitude. One weight should be the maximum weight for prevailing conditions, and the other should provide a sufficient spread to validate weight accountability.

(5) All-engine-out landing.

(i) Several procedures can be utilized to demonstrate compliance with the all-engine-out landing requirement. As discussed in the explanation portion of this paragraph, § 27.75(b) contains two separate requirements. One is the ability to transition safely into autorotation after failure of the last operative engine. The second

aspect of this rule requires that a landing from autorotation be possible. The second requirement is discussed below. The maneuver is entered by smoothly reducing power at an optimum autorotation airspeed at a safe height above the landing surface. If a complete company test program has documented an all-engine-out landing to the GW/ (gross weight/density ratio) limit, verification tests may be initiated at those limiting weight conditions. If not, buildup testing should be initiated at light weight. This test is ordinarily conducted at mid center of gravity. Typically, all altitudes may be approved with two weight limit landings-one at sea level and one near maximum takeoff and landing altitude.

(ii) Demonstrated compliance with this requirement is intended to show that an autorotative descent rate can be arrested, and forward speed at touchdown can be controlled to a reasonable value (less than 40 KTAS is recommended) to ensure a reasonable chance of survivability for the all engine failure condition. On multiengine rotorcraft, rotor inertia is typically lower than for single-engine rotorcraft. RPM decays rapidly when the last engine is made inoperative. Due to this relatively low inertia level, considerable collective may be needed to prevent rotor overspeed conditions when the rotorcraft is flared for landing. Also, when testing the final maximum weight points, the pilot should anticipate a need for considerable collective pitch to control rotor overspeed during autorotative descent, particularly at high altitude WAT limiting conditions. Some designs incorporate features which may lead to rotorcraft damage in testing this requirement (e.g., droop stop breakage or loss of directional control with skids) if landings are conducted to a full stop with the engines cut off.

(iii) The intent of this rule is to demonstrate controlled touchdown conditions and freedom from loss of control or apparent hazard to occupants when landing with all engines failed. In these cases compliance can be demonstrated by leaving throttles in the idle position and ensuring no power is delivered to the drive train. Also, computer analysis may be used in conjunction with simulated in-flight checks to give reasonable assurance that an actual safe touchdown can be accomplished. Another method may be to make a power recovery after flare effectiveness of the rotorcraft has been determined. Other methods may be considered if they lead to reasonable assurance that descent can be arrested and forward speed controlled to allow safe landing with no injury to occupants when landing on a prepared surface with all engines failed. Regardless of the method(s) used to comply with this requirement, careful planning and analyses are very important due to the potentially hazardous aspects of power off simulation and landing of a multiengine rotorcraft totally without power. The all-engine-inoperative landing test is ordinarily done in conjunction with height velocity tests because ground and onboard instrumentation requirements are the same for both tests.

(6) Prior to conducting these tests, the crew should be familiar with the engine inoperative landing characteristics of the rotorcraft. The flight profile may be entered in the same manner as a straight-in practice autorotation. It is recommended that for safety reasons idle power be used if a “needle split” (no engine power to the rotor) can be achieved. In some cases, a low engine idle adjustment has been set to assure

needle split is attained. In other cases a temporary detent between idle and cutoff was used on the throttle. In a third case the engine was actually shut down on sample runs to verify that the engine power being delivered was not materially influencing landing capability or landing distances. The flare is maintained as long as is reasonable to dissipate speed and build RPM Rotor RPM must stay within allowable limits. Aft center of gravity is ordinarily critical due to visibility and flarability. Following the flare, the rotorcraft is allowed to touch down in a landing attitude. Rotor RPM at touchdown should be recorded, and it must be within allowable structural limits.

[See new AC 27.75A (dated 9/17/2009) posted as separate document in RGL with this Master AC.]

AC 27.79. § 27.79 (Amendment 27-14) LIMITING HEIGHT-SPEED ENVELOPE. (thru amendment 27-43; effective with amendment 27-44 see AC 27.87). [See amendment to AC 27.79 (dated 9/17/2009) posted as separate document in RGL with this Master AC.]

a. Explanation.

(1) The height-speed envelope is normally referred to as the height-velocity (HV) diagram. It defines an envelope of airspeed and height above the ground from which a safe power-off or OEI landing cannot be made. The diagram normally consists of three portions: (a) the level flight (cruise) portion, (b) the takeoff portion, and (c) the high speed portion. See figure AC 27.79-1. The high speed portion is omitted on occasions when it can be shown that the rotorcraft can suffer an engine failure at low altitude and high speed (up to V_H) and make a successful landing or climb out on the remaining engine(s).

(2) Power failure, engine failure, throttle chop, or other similar terms used in this discussion mean a simulated engine failure. The actual shutdown of an engine to simulate an engine failure should not be necessary if the simulated procedure ensures that the engine power is suddenly removed from driving the rotor and remains so. The normal fuel control deceleration schedule is usually satisfactory for the power removal for turbine engines but the flight/ground idle speed may have to be set lower than normal for HV testing.

(3) The avoid areas of the HV diagram are separated by the takeoff corridor. This corridor should be wide enough to consistently permit a takeoff flight path clear of the HV diagram using normal pilot skill. The takeoff corridor should always permit a minimum of ±5 knots clearance from critical portions of the diagram.

(4) The knee of the curve separates the takeoff portion from the cruise portion and is defined as the highest speed point on the low speed portion of the HV envelope. Altitudes above this point are considered cruise, or “fly-in,” points, and these test points require a minimum time delay of 1 second between throttle chop and control actuation (reference § 27.143(d)). Altitudes below the knee represent takeoff profile points. For test points in the takeoff portion, takeoff power (or a lower power selected by the applicant as an operating procedure) and normal pilot reaction time for corrective control actuation will be used.

(5) Since the HV diagram may represent the limiting capabilities of the rotorcraft, each test point should be approached with caution. The manufacturer’s

buildup program should be reviewed to determine the amount of conservatism in the HV diagram (if any). It should be remembered that the operational pilot will be operating at or near the HV diagram without the benefit of a buildup program. Buildup testing is necessary, and it is most important to vary only one parameter at a time to prevent surprises. Light weight testing is ordinarily conducted first. High and low hover points are approached from above and below respectively. Portions near the knee are initially evaluated at high speed with subsequent backing down of the speed. In most rotorcraft the effective flare airspeed is critical. At airspeeds slightly below this value, the ability to arrest and control descent rates through use of an aft cyclic flare may be greatly diminished. Extreme care should be exercised when “backing down” to lower speeds.

(6) In addition to the on-board and ground instrumentation, a motion picture camera or other position measuring equipment should cover each run.

(7) For FAA/AUTHORITY tests, the minimum required crew and the minimum instrument panel display presented for certification should be used. Ground safety equipment should be provided.

(8) This test is the least predictable of all the performance items. Therefore, the expansion and extrapolation of test data are questionable. Weight may not be extrapolated to higher values. In order to extrapolate HV data to higher altitudes, any analytical method must have FAA/AUTHORITY approval. In lieu of pure analytical methods, simulations have been used successfully, especially for multiengine rotorcraft. In either case, the maximum allowable extrapolation should be limited to 2,000 feet density altitude (H_D). HV test weights for normal category rotorcraft are the maximum weight at sea level and some lessor weight at high density altitudes. The high density altitude HV curve needs to be defined only to 7,000 feet and may be a lower altitude if the rotorcraft does not have the performance capabilities to attain 7,000 feet. A weight less than the maximum weight may be used to define the high density altitude HV curve, but this weight should not be less than the maximum weight that will allow hovering out-of-ground effect. For a given diagram, typical weight reductions that are necessary as altitude is increased can be conservatively estimated by maintaining a constant gross weight divided by density ratio, GW/σ. See figure AC 27.79-2, Part A. If weight is not varied, an enlarged HV diagram is required for safe power-off landing as density altitude is increased. See figure AC 27.79-2, Part B. Another method of presentation is to show varying weights at a constant density altitude. (See figure AC 27.79-2, Part C.)

(9) Vertical takeoff and landing (VTOL) testing normally does not require separate HV testing. The takeoff and landing tests take on the combined characteristics of takeoff, landing, and HV tests.

b. Procedures.

(1) Instrumentation.

(i) Ground Station. The ground station must have equipment and instrumentation to determine wind direction and velocity, outside air temperature, and if the test rotorcraft has reciprocating engines, humidity. Since the tests must be conducted in winds of 2 knots or less, a smoke generator is highly recommended to show both flightcrew and ground crew personnel the wind direction and velocity at any given time. Additionally, the location of the ground station should be such that it is free of rotor downwash at all times. Motion picture or phototheodolite and radio equipment will be necessary to properly conduct the test program. The use of telemetry equipment is desirable if the location of the test site and the magnitude of the test program make it practical.

(ii) Airborne Equipment (Test Rotorcraft). Necessary installed test equipment may include photopanels and/or recorders for recording engine parameters, control positions, landing gear loads, landing gear deflections, airspeed, altitude, and other variables. An external light attached to the rotorcraft (or any other means of identifying the engine failure point to the ground camera or phototheodolite) is needed to identify the exact time of engine failure and may also be used to synchronize the ground recorder with the airborne recorded data.

(2) Analytical Prediction. The HV diagram can be estimated by analytical means and this is recommended prior to test. HV, however, is the least predictable of all rotorcraft performance and because of this, the expansion and extrapolation of test data must be done with great care. Test weight may not be extrapolated. All test points should be approached conservatively with some speed or altitude margin. If the applicant has conducted a comprehensive HV flight test program to validate his analytical predictions, much preliminary testing can be eliminated. In any case, the maximum allowable extrapolation from flight test conditions is 2,000 feet density altitude, and an approved analytical and/or simulation method must be utilized for extrapolation.

(3) Power.

(i) The appropriate power level before engine failure for the low and high hover points is simply the power required to hover at the prevailing hover conditions. The appropriate power condition prior to failure of the engine for points below the knee is takeoff power or a lower value if approved as an operating procedure. For cruise or “fly-in” points above the knee, the appropriate condition is power required for level flight.

(ii) The applicable power failure conditions are listed in § 29.79(b). Power should be completely cut for normal category rotorcraft. For multiengine rotorcraft with Category A engine isolation, only one engine need be failed and the desired topping power (for the remaining engine(s)) should be set prior to the test. This power value will need adjustment as ambient conditions change. The power can be takeoff power (TOP), 2 ½-minute power, or some calculated lower power for simulating hot day or higher density altitude conditions. Power is verified and recorded by the pilot by “topping” the engine(s) prior to engine failure tests. Care must be taken to ensure

that this power value is no more than that which would be delivered by a minimum specification engine under the ambient conditions to be approved.

(4) Test Loadings. Weight extrapolation is not permitted for HV. Therefore, the test weight must be closely controlled. Ballast or fuel should be added frequently to maintain the weight within -1 to +5 percent when testing final points. Ordinarily, tests are conducted at a mid center of gravity unless a particular loading is expected to be particularly critical.

(5) Landing Gear Loads.

(i) Instrumented landing gear can be a great help in evaluating test results. This information can be telemetered to a ground station or otherwise recorded and displayed for direct reference following each landing.

(ii) Any landing which results in permanent deformation of aircraft structure or landing gear beyond allowable maintenance limits is considered an unsatisfactory test point.

(6) Piloting Considerations. In verifying the HV diagram, the minimum certificated instrument panel display and minimum crew should be used in order not to mislead the operational pilot who has no test equipment available and may have no copilot to assist. Three distinctly different flight profiles are utilized in developing the diagram.

(i) High Hover. A stabilized out-of-ground-effect (OGE) hover condition prior to power failure is essential. A minimum 1-second time delay between power failure and initial control actuation is utilized. Following the time delay, the primary concern is to quickly lower collective and to gain sufficient airspeed to allow an effective flare approaching touchdown. While the immediate development of airspeed is necessary, the dive angle must be reasonable and must be representative of that expected in service. While initial aircraft attitude will vary between models and with changing conditions, 10°-20° has been previously applied as a maximum allowable nose down pitch attitude. Use of greater attitudes could result in a diagram which is difficult to achieve and unrealistic for operations in service. Initial testing should start relatively high with gradual lowering of height to the final high hover altitude. A stabilized OGE hover condition prior to power failure is essential. If a stabilized high hover condition cannot be achieved prior to the engine cut, then this point should be tested from a minimum level flight speed. This will result in an open-ended HV diagram. A smoke source or balloon on a long cord is highly desirable since the wind can vary significantly from surface observations to typical high hover altitudes. Vertical speed must be very near zero at the throttle chop. Any climb or sink rate can have a significant influence on the success of the test point. Use of a radar altimeter with a cross check to barometric altitude is essential.

(ii) Low Hover. From the low hover position there is no flare capability and little time for collective reaction. No time delay is applied other than normal pilot reaction. For typical designs the collective may not be lowered after power failure. Lowering of the collective is not permitted because it is not a pilot action which could be expected if an engine failed without notice during a hovering condition in service. Initial lowering of collective immediately after power failure can result in a very high, unconservative low hover height that is unrealistic for operational conditions. If, however, a design is such that a 1-second pilot delay after power failure could be achieved without any appreciable descent, a slight lowering of collective could be allowed.

(iii) Takeoff Corridor. Normal pilot reaction is applied when the engine is made inoperative. At low speeds, collective may be lowered quickly to retain RPM and minimize the time between power failure and ground contact. If airspeed is sufficient for an effective flare, the aircraft is flared to reduce airspeed, retain rotor RPM, and control vertical speed prior to touchdown. Considerable surface area may be needed for a sliding or rolling stop.

(iv) Additional Considerations. The “in-between” points utilize similar techniques. The cruise or “fly-in” points are similar to the high hover point although the steep initial pitch attitudes are not needed as altitude is decreased and airspeed is increased along the curve. The low speed points along the takeoff corridor are similar to the low hover point except that the collective may be quickly lowered and some flare capability may be used as the “knee” is approached. The pilot should be proficient in all normal autorotation landings before conducting HV tests in a single-engine rotorcraft.

(7) Ground Support. Motion picture or theodolite coverage and ground safety equipment are necessary. Communication capability among these elements should be provided. Use of a phototheodolite to compare height/speed with cockpit observations is very desirable.

(8) Verifying the HV Diagram.

(i) A sufficient number of test points must be flown to verify the diagram. The key areas are the knee, high altitude hover, low altitude hover, and low altitude high speed flight. Test points with excessive gear loads, exceptional skill requirements, winds above permissible levels, rotor droop below approved minimum transient RPM, damage to the rotorcraft, excessive power, incorrect time delay, etc., cannot be accepted.

(ii) After the HV diagram is defined, it should be ascertained that the corridor permits takeoffs within ±5 knots of the recommended takeoff profile.

(9) Flight Manual. The flight manual should list any procedures which may apply to specific points (e.g., high speed points) and test conditions, such as runway surface, wave height for amphibious tests, marginal areas of controllability or landing

gear response, etc. The HV curve should be presented in the RFM using actual altitude above ground level and indicated airspeed.

(10) Night Evaluation. If a rotorcraft is to be certified for night operation, a night evaluation is required. Simulated engine failures should be conducted along the recommended takeoff path. Landings should also be qualitatively evaluated with an engine failed. Engine failures at critical HV conditions are not required. The intent is to show adequate visibility using aircraft and/or runway lights without requiring a duplication of the daytime HV test program.

(11) Water Landings. For amphibious float-equipped rotorcraft, day and night water landings should be conducted under critical loading conditions with an engine failed. Engine failures should be conducted along the recommended takeoff path. Engine failures at critical HV conditions are not required. The intent is to show similarity to test results over land without requiring a duplication of the HV test program.

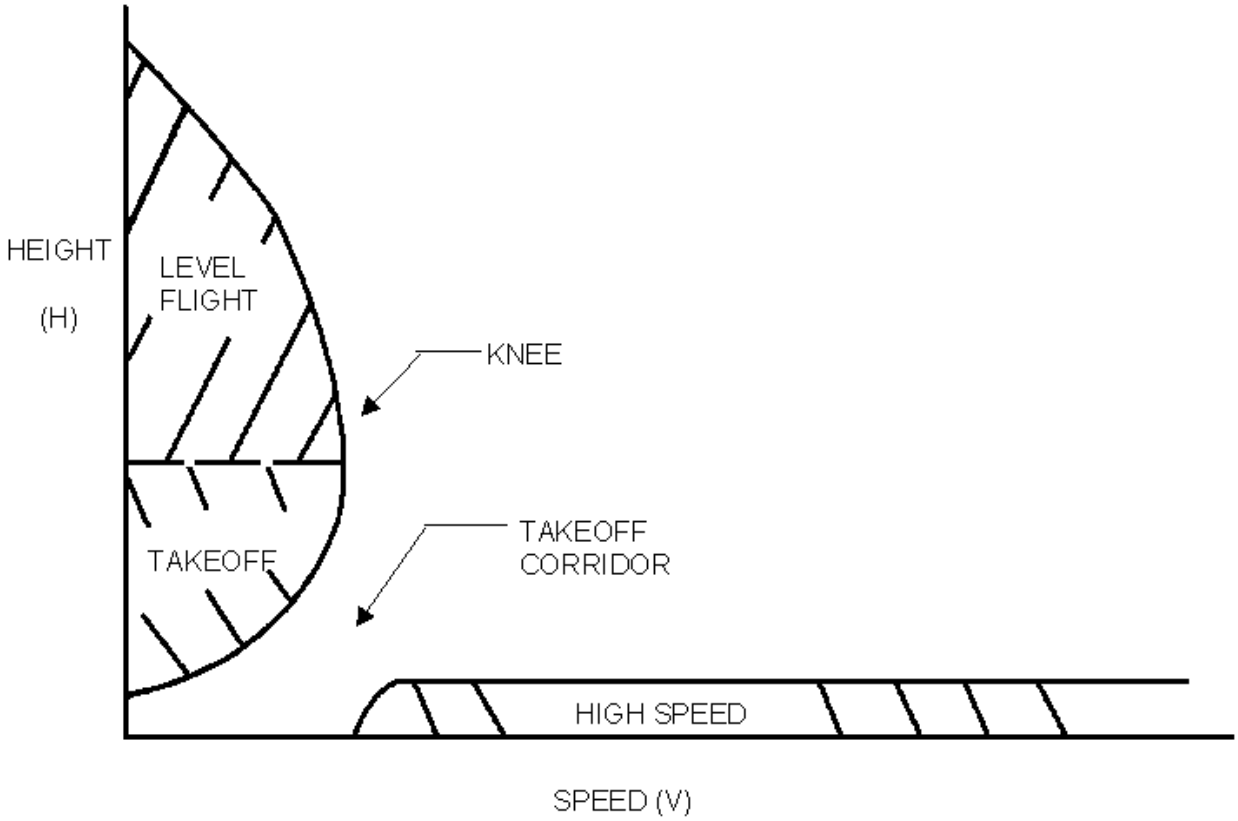

FIGURE AC 27.79-1 HEIGHT - VELOCITY DIAGRAM

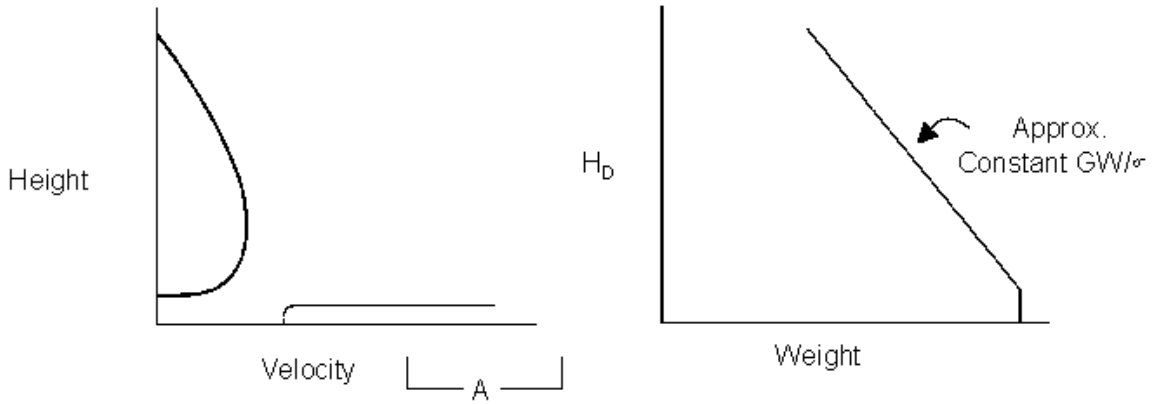

CONSTANT HV DIAGRAM, VARIABLE WEIGHT

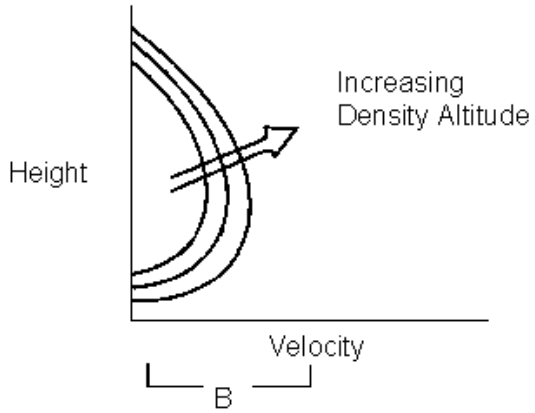

CONSTANT WEIGHT

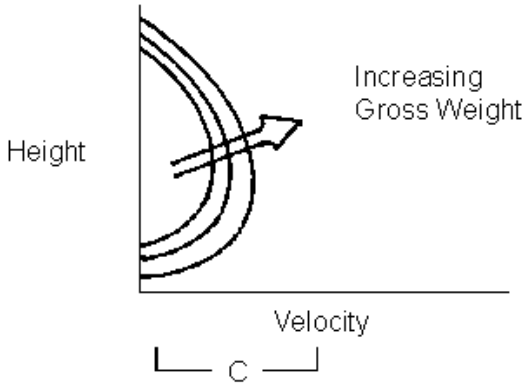

CONSTANT DENSITY ALTITUDE

FIGURE AC 27.79-2 ALTITUDE/WEIGHT ACCOUNTABILITY

AC 27.79A. § 27.79 (Amendment 27-21) LIMITING HEIGHT-SPEED ENVELOPE.

a. Explanation. Amendment 27-21 to the regulation redefines the required weight for establishing the HV envelope at altitudes above sea level.

b. Procedures. All of the policy material pertaining to this section remains in effect. In addition, the following applies:

(1) The rotorcraft height-velocity envelope should be established for the maximum gross weight at sea level. At altitudes above sea level, the envelope should be established at not less than the maximum operating weight or OGE hover weight, whichever is lower. If a weight below the OGE hover weight is selected, by definition, that selected weight becomes the maximum operating weight for the rotorcraft at that altitude.

(2) If the HV envelope is established for a maximum altitude less than 7,000 feet, by definition, the maximum takeoff and landing altitude for the rotorcraft may be no higher than that maximum HV altitude. Hover performance information should not be presented for altitudes above the maximum altitude for which the HV envelope is established.

[See new AC 27.87 (dated 9/17/2009) posted as separate document in RGL with this Master AC.]

SUBPART B - FLIGHT

FLIGHT CHARACTERISTICS

AC 27.141. § 27.141 (Amendment 27-21) FLIGHT CHARACTERISTICS--GENERAL.

a. Explanation.

(1) This section prescribes the general flight characteristics required for certification of a normal category rotorcraft. Specifically, it states that the rotorcraft shall comply with the flight characteristics requirements at all approved operating altitudes, gross weights, center of gravity locations, airspeeds, power, and rotor speed conditions for which certification is requested. The reference to altitude in § 27.141(a)(1) refers to density altitude. Density altitude is, of course, a function of pressure altitude and ambient temperature, hence the need to account for ambient temperature effects. Additional flight characteristics required for instrument flight are contained in AC 27 Appendix B of this advisory circular.

(2) Generally, the aircraft structural (load level) survey accounts for takeoff power values at speeds up to and including V_Y. At speeds above V_Y, maximum continuous power is assumed. Stress to rotating components usually increases with airspeed and power. If the takeoff power rating exceeds the maximum continuous power rating, and the structural survey has been conducted under the assumption that takeoff power is not used at speeds above V_Y, the Rotorcraft Flight Manual must limit takeoff power to speeds of V_Y and below. If takeoff power is structurally substantiated throughout the flight envelope, and appropriate portions of the controllability, maneuverability, and trim requirements of §§ 27.141 through 27.161 are met at takeoff power levels, no flight manual entry is needed. Obviously if transmission limits for maximum continuous (MC) and takeoff power coincide, no special action is needed.

(3) During the flight characteristics testing, the controls must be rigged in accordance with the approved rigging instructions and tolerances. The control system rigging must be known prior to testing. In addition to the normal rigging procedures, any programmed control surfaces, which may be operated by dynamic pressure, electronics, etc., must also be calibrated. During the flight test program, it is frequently necessary to rig a control, such as the swashplate or tail rotor blade angle, to the allowable critical extreme of the tolerance band. For example, it would be necessary to rig the tail rotor to the minimum allowable blade angle if meeting the requirements of §27.143(c) would be in question. The same consideration must be given to all rotorcraft controls and movable aerodynamic surfaces where questionable compliance with the regulations may exist. If the rotor-induced vibration characteristics of the rotorcraft are significantly affected and require time-consuming rigging for such things as acceptable ride comfort, then the rotor(s) should be rigged to the allowable extreme tolerance limits to determine compliance, for example, with § 27.251.

(4) During the FAA/AUTHORITY flight test program, the crew should be especially alert for conditions requiring great attentiveness, high skill levels, or exceptional strength. If any of these features appear marginal, it is advisable to obtain another pilot's opinion and to carefully document the results of these evaluations. Section 27.141(b) provides the regulatory basis for these strength and skill requirements. The general requirements for a smooth transition capability between appropriate flight conditions are also included in § 27.141(b). These requirements must also be met during appropriate engine failure conditions for each category of rotorcraft.

(5) For night or IFR approval, § 27.141(c) contains the general regulatory reference, which requires additional characteristics for night and IFR flight. The appropriate flight test procedures are included in other portions of this advisory circular.

b. Procedures. none

AC 27.143. § 27.143 (Amendment 27-21) CONTROLLABILITY AND MANEUVERABILITY.

[See new AC 27.143A (dated 9/17/2009) posted as separate document in RGL with this Master AC.]

a. Explanation.

(1) This regulation contains the basic controllability requirements for normal category rotorcraft. It also specifies a minimum maneuvering capability for required conditions of flight. The general requirements for control and for maneuverability are summarized in § 27.143(a) which is largely self-explanatory. The hover condition is not specifically addressed in § 27.143(a)(2) so that the general requirement may remain applicable to all rotorcraft types, including those without hover capability. For rotorcraft, the hover condition clearly applies under "any maneuver appropriate to the type."

(2) Paragraphs (b) through (e), § 27.143, include more specific flight conditions and highlight the typical areas of concern during a flight test program.

(i) Section 27.143(b) specifies flight at V_{NE} with critical weight, center of gravity (CG), rotor RPM, and power. Adequate cyclic authority must remain at V_{NE} for nosedown pitching of the rotorcraft and for adequate roll control. Nosedown pitching capability is needed for control of gust response and to allow necessary flight path changes in a nosedown direction. Roll control is needed for gust response and for normal maneuvering of the aircraft. In the past, 10 percent control travel margin has been applied as an appropriate minimum control standard. The required amount of control power, however, has very little to do with any fixed percentage of remaining control travel. There are foreseeable designs for which 5 percent remaining is adequate and others for which 20 percent may not be enough. The key is, can the remaining longitudinal control travel at V_{NE} generate a clearly positive nosedown pitching moment, and will the remaining lateral travel allow at least 30° banked turns at reasonable roll rates? Moderate lateral control reversals should be included in this evaluation and since available roll control can diminish with sideslip, reasonable out of trim conditions

(directionally) should be investigated. This “control remaining” philosophy must also be applied for other flight conditions specified in this section.

(ii) Section 27.143(c) requires a minimum control capability for hover and takeoff in winds of 17 knots from any azimuth. Control capability in wind from zero to at least 17 knots must also be shown for any other appropriate maneuver near the ground such as rolling takeoffs for wheeled rotorcraft. These requirements must be met from standard sea level conditions to the maximum altitude capability of the rotorcraft or 7,000 feet, whichever is less. On rotorcraft incorporating a tail rotor, efficiency of the tail rotor decreases with altitude so that a given sideward flight condition requires more pedal deflection, a higher tail rotor blade angle, and more horsepower. Hence, directional capability in sideward flight (or at critical wind azimuth) is most critical during testing at a high altitude site.

(iii) Section 27.143(d) requires adequate controllability when an engine fails. This requirement specifies conditions under which engine failure testing must be conducted and includes minimum required delay times.

(A) For rotorcraft which meet the engine isolation requirements of transport Category A, demonstration of sudden complete single-engine failure is required at critical conditions throughout the flight envelope including hover, takeoff, climb at V_Y, and high speed flight up to V_{NE}. Entry conditions for the first engine failure are engine or transmission limiting maximum continuous power (or takeoff power where appropriate) including reasonable engine torque splits. For multiengine Category A installations (three or more engines) subsequent engine failures should be conducted utilizing the same criteria as that used for first-engine failure. The applicant may limit his flight envelope for subsequent failures. Initial or sequential engine failure tests are ordinarily much less severe than the “last” engine failure test required by § 27.75(b). The conditions for last-engine failure are maximum continuous power, or 30-minute power if that rating is approved, level flight, and sudden engine failure with the same pilot delay of 1 second or normal pilot reaction time, whichever is greater.

(B) For rotorcraft without transport Category A engine isolation, demonstration of sudden complete power failure is required at critical conditions throughout the flight envelope. This includes speeds from zero to V_{NE} (power-on) and conditions of hover, takeoff, and climb at V_Y. Maximum continuous power is specified prior to the failure for the cruise condition. Power levels appropriate to the maneuver should be used for other conditions. The corrective action time delay for the cruise failure should be 1-second or normal pilot reaction time (whichever is greater). Cyclic and directional control motions which are apart of the pilot task of flight path control are normally not subject to the 1-second restriction; however, the delay is always applied to the collective control for the cruise failure. If the aircraft flying qualities and cyclic trim configuration would encourage routine release of the cyclic control to complete other cockpit tasks during cruise flight, consideration should be given to also holding cyclic fixed for the 1-second delay. Although the same philosophy could be extended to the directional controls, the likelihood of the pilot having his feet away from the pedals is

much lower, unless the aircraft has a heading hold feature. Rotor speed at execution of the cruise condition power failure should be the minimum power-on value. The term "cruise" also includes cruise climb and cruise descent conditions. Normal pilot reaction times are used elsewhere. Although this requirement specifies maximum continuous (MC) power, it does not limit engine failure testing to MC power. If a takeoff power rating is authorized for hover or takeoff, engine failure testing must also be accomplished for those conditions. Following power failure, rotor speed, flapping, and aircraft dynamic characteristics must stay within structurally approved limits.

(iv) Section 27.143(e) addresses the special case in which a V_{NE} (power-off)is established at an airspeed value less than V_{NE} (power-on). For this case, engine failure tests are still required at speeds up to and including V_{NE} (power-on), and the rotorcraft must be capable of being slowed to V_{NE} (power-off) in a controlled manner with normal pilot reactions and skill. There is, however, no controllability requirement for stabilized power-off flight at speeds above 1.1 V_{NE} (power-off) when V_{NE} (power-off) is established per § 27.1505(c).

(v) Application of the controllability requirement for pitch, roll, and yaw at speeds of 1.1 V_{NE} (power-off) and below is similar to that described above for power-on testing at V_{NE}. Sufficient directional control must exist to allow straight flight in autorotation during all approved maneuvers including 30° banked turns up to V_{NE} (power-off) with some small additional allowance for gust control. Adequate controllability margins must exist in all axes throughout the approved autorotative flight envelope. Testing to V_{NE} at MC power per § 27.143(b), 1.1 V_{NE} at power for 0.9 V_H per § 27.175(b) or § 27.1505, and to 1.1 V_{NE} (power-off) in autorotation per § 27.143(e) should be sufficient to assure adequate control margin during a descent condition at high speed and low power. The high speed, power-on descent condition should be checked for adequate control margin as a "maneuver appropriate to the type." There has been one instance where insufficient directional pedal was available to maintain a reasonable trimmed sideslip angle with low power at very high speeds, and a case where there was insufficient forward and lateral cyclic available to reach the power on V_{NE}. The insufficient directional pedal margin was due to the offset vertical stabilizers. The lack of cyclic stick margin was because the cyclic stick migrated to the right as power was reduced, and the control limits were circular. This provided less total available forward cyclic stick travel when the cyclic was moved right and forward about 45° from the center position. Each of the above rotorcraft was certificated with a rate of descent limitation to preclude operation in the control-limited area.

(vi) An evaluation of the emergency descent capability of the rotorcraft should be made, either analytically or through flight test. Areas of consideration are the rate of descent available, the maximum approved altitude, and the time before a catastrophic failure following the loss of transmission oil pressure or other similar failure. Each rotorcraft should have the capability to descend to sea level and land from the maximum certificated altitude within the time period established as safe following a critical failure. If the time period does not permit a sea level landing, the maximum

height above the terrain must be specified in the limitation section of the Rotorcraft Flight Manual.

(3) The required controllability and maneuvering capabilities must also be considered following the failure of automatic equipment used in the control system (§ 27.672). Examples include stability augmentation systems (SAS), stability and control augmentation systems (SCAS), automatic flight control systems (AFCS), devices to provide or improve longitudinal static stability such as a pitch bias actuator (PBA), yaw dampers, and fly-by-wire elevator or stabilator surfaces. These systems all use actuators of some type, and are subject to actuator softover and hardover malfunctions. The flight control system should be evaluated to determine whether an actuator jammed in an extreme position would result in reduced control margins. Generally, if the flight control system stops are between the actuator and the cockpit control, the control margin will be affected. If the control stops are between the actuator and the rotor head, the control margins may not be affected, but the location of the cockpit control may be shifted. This could produce interference with other items in the cockpit. An example of this would be a lateral actuator jammed hardover causing a leftward shift in the cyclic stick position. Interference between the cyclic stick, the pilot's leg, and the collective pitch control could reduce the left lateral control available and reduce left sideward flight capability. In the case of fly-by-wire surfaces, both the high speed forward flight controllability and the rearward flight capabilities could be affected. Flight control systems that incorporate automatic devices should be thoroughly evaluated for critical areas. Every failure condition that is questionable should be flight tested with the appropriate actuator fixed in the critical failure position. These failures may require limitations of the flight envelope. Any procedure or limitation that must be observed to compensate for an actuator hardover and/or softover malfunction should be included in the Rotorcraft Flight Manual.

b. Procedures.

(1) Flight test instrumentation should include ambient parameters, all flight control positions, rotor RPM, main and tail rotor flapping (if appropriate), engine power instruments, and throttle position. Flight controls that are projected to be near their limits of authority should be rigged to the most adverse production tolerance. A very accurate weight and balance computation is needed along with a precise knowledge of the aircraft's weight/CG variation as fuel is burned.

(2) The critical condition for V_{NE} controllability testing is ordinarily aft CG, MC power, and minimum power-on rotor RPM, although power and RPM variations should be specifically evaluated to verify their effects. The turbine engine is sensitive to ambient temperatures which affect the engine's ability to produce rated maximum continuous torque. Flight tests conducted at ambient temperatures that cause the turbine temperature to limit maximum continuous power would not produce the same results obtained at the same density altitude at colder ambient temperatures where maximum continuous torque would be limiting. Forward CG should be spot checked for any "tuck under" tendency at high speed. The V_{NE} controllability test is normally

accomplished shortly after the 1.1 V_{NE} (or 1.1V_H) point obtained during stability tests required by § 27.175(b). Controllability must be satisfactory for both conditions. If V_{NE} varies with altitude or temperature, V_{NE} for existing ambient conditions is utilized for the test. Extremes of the altitude/temperature envelope should be analyzed and investigated by flight test.

(3) The critical condition for controllability testing in a hover is ordinarily forward CG at maximum weight with minimum power-on rotor RPM. For rearward flight testing of configurations where the forward CG limit varies with weight, low or high gross weight may be critical. Lateral CG limits should also be investigated. A calibrated pace vehicle is needed to assure stabilized flight conditions. Surface winds should be less than 3 knots throughout the test sequence. Testing can be done in higher stabilized wind conditions (gusting less than 3 knots); however, these conditions are very difficult to find and the method is very time consuming due to the necessity of waiting for stabilized winds. Testing in calm winds is preferred. Hover controllability testing should be accomplished with the lowest portion of the rotorcraft at the published hover height above ground level; however, the test altitude above the ground may be increased to provide reasonable ground clearance. Although the necessary yaw response will vary somewhat from model to model, sufficient control power should be available to permit a clearly recognizable yaw response after full directional control displacement when the rotorcraft is held in the most critical position relative to wind.

(4) Prior to engine failure testing, it is mandatory that the pilot be fully aware of his engine, drive system, and rotor limits. These limits were established during previous ground and flight tests and should be specified in the TIA. Particular attention should be given to minimum stabilized and minimum transient rotor RPM limits. These values must be included in the TIA and should be approached gradually with a build-up in time delay unless the company testing has completely validated all pertinent aspects of engine failure testing. On Category A installations, the maximum power output of each engine must be limited so that when an engine fails and the remaining engine(s) assume the additional load, the remaining engine(s) are not damaged by excessive power extraction and over-temping. This is needed for compliance with § 27.903(b). The propulsion engineer should have assured that this feature was properly addressed in the engine and drive system substantiation; however, it must be assumed that for some period of time the pilot may extract maximum available power from the remaining engine(s) when an engine fails during critical flight maneuvers. Substantiation of this feature should be accomplished primarily by engine and drive system ground tests.

(5) Longitudinal cyclic authority at V_{NE} with any power setting must permit suitable nosedown pitching of the rotorcraft. If the remaining control travel is considered marginal, tests should include applications up to full control deflection to assess the remaining authority. Some knowledge of the aircraft's response to turbulence is useful in assessing the remaining margin. As a minimum, the rotorcraft must have adequate margin available to overcome a moderate turbulent gust and must not have any divergent characteristic which requires full deflection of the primary recovery control to arrest aircraft motion. If other controls must be utilized to overcome adverse aircraft

motion, the results are unacceptable; e.g., if a pitch up tendency resulting from an actual or simulated moderate turbulent gust cannot be satisfactorily overcome by remaining forward cyclic, the use of throttle or collective controls to assist the recovery is not an acceptable procedure; however, the use of lateral cyclic to correct roll in conjunction with forward cyclic to correct pitchup is satisfactory. Obviously during the conduct of these tests, all available techniques should be utilized when the pilot finds himself "out of control." However, compliance with this section requires that recovery must be shown by use of only the primary control for each axis of aircraft motion.

(6) Cyclic control authority in autorotation must be sufficient to allow adequate flare capability and landing under the all-engine-inoperative requirements of § 27.75.

[See new AC 27.143A (dated 9/17/2009) posted as separate document in RGL with this Master AC.]

AC 27.151. § 27.151 (Amendment 27-21) FLIGHT CONTROLS.

a. Explanation. Excessive breakout or preload in the flight controls produces control system force discontinuities which result in increased workload and controllability problems for the pilot. Similarly, excessive freeplay results in lost motion which increases pilot workload and, in an extreme case, could lead to a hazardous pilot-induced oscillation. In some designs friction can provide a positive contribution to the function of the flight controls (e.g., masking aerodynamic feedback in reversible systems). At some point, friction will have a detrimental effect on the pilot's ability to properly control the machine. In the case of an irreversible design equipped with an artificial force feel system in pitch and roll, excessive friction can mask a shallow force gradient making positive stick centering and control force static stability difficult if not impossible to demonstrate. In such an instance, the initial choice of fixes might include implementation of a steeper force gradient or addition of a force preload. Unfortunately, these solutions often lead to the kinds of problems discussed earlier. Care must therefore be exercised during the initial design phase to ensure that the components and characteristics of the flight control system are well matched.

b. Procedures. Regardless of the flight control system sophistication, it is important that the test pilot understand the system configuration prior to flight evaluation. Appropriate mechanical characteristics should be documented. For VFR aircraft, the mechanical characteristics are typically assessed in flight on a qualitative basis. If a controllability or workload problem is identified, a more detailed investigation would be necessary. Since IFR certification rules include specific trim and force requirements, a more quantitative investigation of mechanical characteristics is normally conducted. The constantly varying feedback forces of reversible flight control systems generally make such designs unsuitable for IFR application. Irreversible system mechanical characteristics can often be partially documented on the ground with external hydraulic and electrical power supplies connected to the aircraft. Knowledge of the breakout, friction, and force gradient characteristics prior to flight can be useful to the pilot during flight evaluation of the system.

AC 27.161. § 27.161 (Amendment 27-21) TRIM CONTROL.

a. Explanation.

(1) The pilot has many tasks to perform with each hand during sustained flight conditions. The trim requirement is intended to reduce the physical demands to maintain a given flight condition. It is not intended to require that control forces be reduced to zero by the trim control during dynamic maneuvers such as takeoff acceleration.

(2) A number of devices may be used to produce the necessary trim characteristics. One popular method of meeting this requirement is through the use of control balance springs in conjunction with a small amount of built-in control system friction. Other methods include use of friction, magnetic brakes, bungees, and irreversible mechanical schemes.

(3) This regulation is not intended to require zero friction or zero breakout force in the control system, nor is it intended to require automatic control recentering. The regulation, in fact, specifically prohibits excessive high friction or high breakout forces which would produce undesirable discontinuities in the primary control force gradient.

b. Procedures.

(1) If comprehensive company flight test data are available, compliance with this requirement can quickly be found by spot checking extreme center of gravity loadings. Trim tests can ordinarily be done during the course of other flight test activities. To conduct the test, briefly release the control at the required flight conditions and determine that the control does not move. The words “any appropriate speed” ordinarily include any speed from hover to V_H. If the control system trim device might be subject to temperature or humidity effects, these should be investigated at a minimum of two altitude extremes and during several test phases.

(2) If a pilot controllable variable friction device is incorporated, compliance with this requirement must be shown at the minimum adjustable value. The maximum value of adjustable friction should not completely lock the flight controls.

(3) Continued compliance with this requirement should be ensured through a production procedure. If minimum friction or centering springs are used, it is desirable for the manufacturer to include some adjustment capability for production differences. The explanation and procedures discussed here are applicable for VFR approval under § 27.161. For additional IFR trim requirements, refer to AC 27 Appendix B.

AC 27.171. § 27.171 STABILITY: GENERAL.

a. Explanation. This section is intended to require a manageable pilot workload for the minimum crew under foreseeable operating conditions.

b. Procedures.

(1) Compliance with the requirements of this section can often be obtained for the VFR condition without any specific or designated flight testing. If the rotorcraft is marginal in regard to pilot strain and fatigue, the FAA/AUTHORITY pilot should be assured, through special tests if necessary, that the aircraft can be satisfactorily flown throughout the maximum endurance capabilities of the rotorcraft including night and turbulence conditions if those are critical. This test should be conducted with minimum required systems in the aircraft and with minimum flightcrew.

(2) Reasonable failure conditions which add to pilot workload, strain, and fatigue should be evaluated (electrical, hydraulic, and mechanical failures, etc.). The necessary times associated with flight with a failed system must be appropriate to the flight manual procedures for each failure. A failure condition requiring immediate landing would obviously require shorter evaluation time than a condition allowing continued flight to destination.

(3) IFR approvals necessitate a careful evaluation of paragraphs b (1) and (2) above. In IFR operations, weather conditions frequently necessitate continued flight to destination or diversion to alternate airports with critical failures. Immediate landing may not be feasible. The evaluating pilot must ensure pilot strain and fatigue are acceptable during typical flight profiles for each type of operation to be approved.

AC 27.173. § 27.173 (Amendment 27-21) STATIC LONGITUDINAL STABILITY.

[See new AC 27.173A (dated 9/17/2009) posted as separate document in RGL with this Master AC.]

a. Explanation.

(1) This rule contains control requirements for both stability and control. Paragraph (a) contains the basic control philosophy necessary for all civil aircraft. Forward motion of the cyclic control must produce increasing speeds, and aft motion must result in decreasing speeds. For rotorcraft, this is accomplished with throttle and collective held constant. Rotorcraft with either highly stable or highly unstable static longitudinal stability characteristics can typically comply with the basic requirement for control sense of motion. However, the intent and interpretation of this paragraph is to provide a stable stick position versus airspeed gradient. Therefore, a stabilized airspeed less than the trim speed requires a cyclic stick position aft of the trim stick position, and a stabilized airspeed greater than the trim speed requires a cyclic stick position forward of the trim speed stick position.

(2) The remainder of § 27.173, through reference to § 27.175, contains the basic control position requirements necessary to establish a minimum level of static longitudinal stability. Positive stability is found for conditions of climb, cruise, and autorotation in § 27.175 by requiring a stable stick position gradient through a specified speed range. A defined level of instability is permitted for the hovering condition.

b. Procedures.

(1) The control requirement of this section is so essential to basic flight mechanics that compliance may be found during conventional flight testing for compliance with other portions of the regulations. No special or designated testing should be required.

(2) The procedures necessary to ensure compliance with the stability requirements of this section are contained under § 27.175.

[See new AC 27.173A (dated 9/17/2009) posted as separate document in RGL with this Master AC.]

AC 27.175. § 27.175 (Amendment 27-21) DEMONSTRATION OF STATIC LONGITUDINAL STABILITY.

[See new AC 27.175A (dated 9/17/2009) posted as separate document in RGL with this Master AC.]

a. Explanation.

(1) This rule incorporates the specific flight requirements for demonstration of static longitudinal stability. Specific loadings, configurations, power levels, and speed ranges are stated for conditions of climb, cruise, autorotation, and hover.

(2) Some rotorcraft in forward flight experience significant changes in engine power with changes in airspeed even though collective and throttle controls are held fixed and altitude remains relatively constant. For these cases, the guidance in § 27.173 which states that throttle and collective pitch must be held constant is appropriate for administration of this rule, and the specified power in § 27.175(a), (b), and (c) should be considered as power established at initial trim conditions. This will result in slightly higher or lower torque readings at “off trim” conditions. Collective and throttle controls are held constant when obtaining data during climb, cruise, and autorotation tests.

(3) The effects of rotor RPM on autorotative static stability should be determined and positive stability demonstrated for the most critical RPM. Values for RPM can be expected to change as airspeed is varied from the “trimmed” condition. The manufacturer’s recommended autorotation airspeed is ordinarily used for trim.

(4) Hovering is considered a flight maneuver for which the pilot repeatedly adjusts collective to maintain an approximately constant altitude above the ground. For hover stability tests, collective and throttle adjustments are made as necessary to maintain an approximately constant height above the ground. Also, a limited amount of negative longitudinal control travel is allowed with changes in speed.

b. Procedures.

(1) Instrumentation.

(i) Sensitive control position instrumentation is mandatory. Engine power parameters should be recorded at trim. For testing of minor modifications or when

using a “before and after” method, a tape measure or a stick plotting board may be utilized. A stick plotting board consists of a level surface with a clean sheet of paper on it attached to the cockpit or seat structure. The installation must not interfere when the flight controls are fully displaced. A recording pencil is attached to the cyclic control by an offsetting arm in such a manner that it can be pushed down on the board to record relative cyclic position at key times during test maneuvers. The figure AC 27.175-1 plot is a typical presentation of longitudinal static stability.

(ii) Other necessary parameters include pressure altitude, ambient temperature, and indicated airspeed (pace vehicle or theodolite speed for hover tests). For hover tests, hover height (radar altitude if available) and surface winds should be documented. Two-way communication with a pace vehicle is highly desirable. Ground safety equipment is desirable.

(2) Ambient Conditions. Smooth air is necessary for stability testing. Allowable wind conditions for hover stability testing are the same as those for hover controllability tests. Extrapolation is covered in paragraph AC 27.45.

(3) Loading. Aft center of gravity (CG) is ordinarily critical for longitudinal stability testing, although high speed flight and hover should be checked at full forward CG and maximum weight. At aft CG, light or heavy weight conditions can be critical. The manufacturer’s flight data should be reviewed to determine critical loading conditions.

(4) Conducting the Test.

(i) The rotorcraft should be established in the desired configuration and flight condition (climb, cruise, autorotation) with the required power and rotor speed at the trim airspeed. The collective stick should be fixed in that position, usually by applying sufficient friction to ensure that it is not inadvertently moved. For autorotative tests, a rotor speed should be selected so that the variations in rotor speed as airspeed and altitude change do not exceed the allowable limits. This point is recorded as the trim point. Airspeed is then increased or decreased in about 10-knot increments, stabilizing on each speed and recording the data. At least two points on each side of the trim speed should be taken.

(ii) The cruise test should be accomplished by first determining V_H (level flight speed at maximum continuous power) at the test altitude. Then reduce power to establish a level flight trimmed condition at 0.9 V_H (or 0.9 V_{NE} if lower). This point is then recorded as the trim point. The collective pitch and throttle must remain fixed at the trim setting for the remainder of the test. The airspeed is then varied above and below the trim speed using the cyclic control to climb or dive slightly.

(iii) For climb and autorotation tests, conduct fixed collective tests through an altitude band (usually ±2,000 feet), first increasing airspeed as data points are collected, then decreasing speed through the same altitude band. It will probably not be

possible to obtain the required data on one pass through the altitude band. If repeated passes are required, a trim point should be taken at the beginning of each pass unless very sensitive collective pitch position information is available in the cockpit. Generally, it will be possible to acquire all the high speed points on one pass and the low speed points on the second.

(iv) If extremely precise results are required, an alternate method of testing can be used to acquire the data at a constant altitude. For cruise, data can be obtained by alternating airspeeds above and below the trim speed to arrive in the vicinity of the test altitude as the point is recorded. This method results in very precise data because collective and throttle are not moved as airspeed is changed at a constant altitude. A typical sequence of speeds that could produce these results would be: 150 (V_H), 135 ($0.9V_H$) trim speed, 125, 145, 115, 155, 105, and 165.

(v) For rotorcraft with high rates of climb, a series of climbs, each at a different speed, may be required through a given altitude, utilizing sensitive instrumentation to ensure collective position is the same for each data point. In autorotation, a similar case arises and a series of descents, each at a different speed, may be required through a given altitude band, using sensitive instrumentation to ensure a repeatable collective position.

(vi) Hover tests should be conducted by maintaining an approximately constant altitude above the ground at the hover height established for performance purposes. The test altitude above the ground may be increased to provide reasonable ground clearance during rearward flight. Groundspeed is varied using a pace vehicle, theodolite, or other velocity measuring equipment. A pace vehicle is an aid in maintaining an accurate hover height. The pilot can accurately maintain height by controlling his sight picture of the pace vehicle (level with the roof, antenna, etc.). Hover stability tests are ordinarily conducted in conjunction with hover controllability tests because instrumentation and facilities are essentially the same.

(vii) Normally, climb, cruise, and autorotation tests should be conducted at low, medium, and high altitudes. See paragraph AC 27.45 for guidance on interpolation and extrapolation. High speed stability has been critical during cold weather testing. In two recent models, V_{NE} at cold temperatures has been limited by the stability requirements of § 27.175(b). Cold weather testing should be accomplished or a conservative approach for advancing blade tip Mach number should be used to limit cold weather V_{NE} to tip Mach number values demonstrated during warm weather testing.

(viii) Hover stability should be verified at low altitude and, if required, at high altitude. Refer to paragraph AC 27.45b(2) for guidance on expansion and extrapolation of altitude.

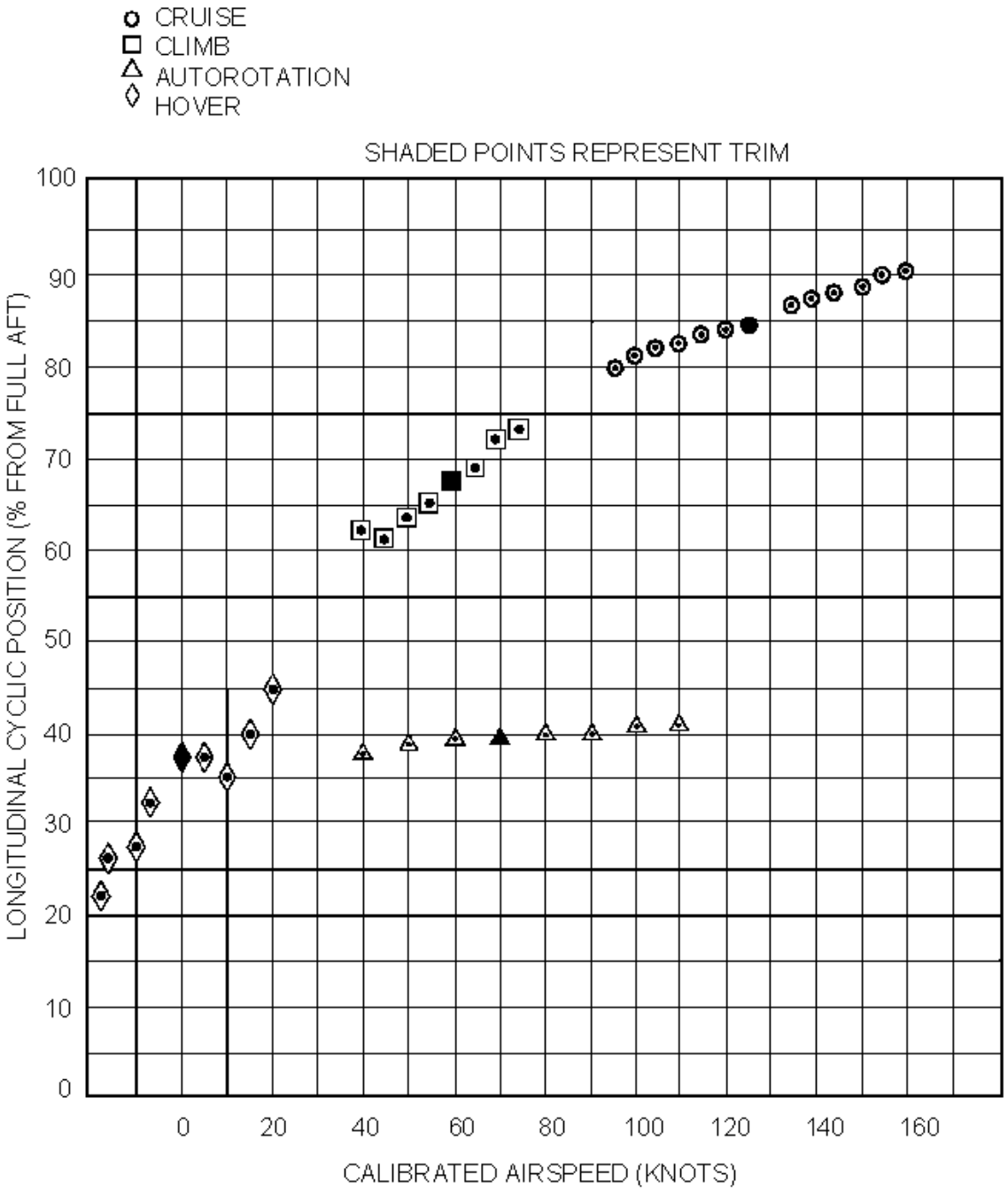

FIGURE AC 27.175-1 STATIC LONGITUDINAL STABILITY

[See new AC 27.175A (dated 9/17/2009) posted as separate document in RGL with this Master AC.]

AC 27.177. § 27.177 (Amendment 27-21) STATIC DIRECTIONAL STABILITY.

[See new AC 27.177A (dated 9/17/2009) posted as separate document in RGL with this Master AC.]

a. Explanation. This rule requires that positive static directional stability be demonstrated at the trim airspeeds defined in § 27.175. The trim speed for climb is V_Y and for cruise $0.9V_H$ or $0.9V_{NE}$ (whichever is less).

b. Procedures.

(1) Tests for static directional stability require instrumentation for pedal position and sideslip angle. To obtain accurate sideslip angle and airspeed information, a “yaw boom” is usually installed for the purpose of mounting a sideslip vane and swiveling airspeed pilot head outside the main rotor downwash region of influence. Special care should be taken to ensure that the yaw boom installation has been verified to be structurally adequate and free of dynamic instabilities for all combinations of airspeed and rotor speed likely to be experienced during the static directional evaluation. For some installations, the instrumentation yaw boom may influence the flying qualities of the rotorcraft itself. Thus, it is advisable to correlate yaw string displacement or slip indicator ball widths of skid with yaw boom sideslip angle, and then repeat a few critical points with the yaw boom removed.

(2) For some rotor system designs, the main and tail rotor flapping angle may be a critical instrumentation requirement for static directional testing. Both main and tail rotor flapping may increase dramatically at high airspeeds with increasing sideslip angle. Therefore, for rotor systems exhibiting this characteristic, flapping should be monitored carefully during the sideslip maneuver to avoid exceeding limitations. Static directional stability is normally defined in terms of pedal displacement required to maintain a steady heading sideslip. A single-rotor rotorcraft flying in coordinated flight will exhibit a small inherent sideslip due to tail rotor thrust and fuselage/main rotor sideforces. This condition is normally taken as trim with the inherent sideslip angle noted. Airspeeds should be the trim values described above. The procedures used to establish and maintain the steady heading sideslip can significantly influence test results. A generally accepted technique follows:

(i) Stabilize at the trim point, and note indicated airspeed.

(ii) Record trim conditions including inherent sideslip. Maintain fixed collective and throttle for the remainder of the maneuver.

(iii) Smoothly apply directional control and coordinate with lateral control to establish the desired sideslip angle. A steady track can best be ensured by maintaining a track over a straight landmark on the ground such as a section line or straight segment of powerline or highway.

(iv) Because drag increases with sideslip, the aircraft will decelerate. The trim airspeed should be maintained by entering a slight dive or decreased rate of climb. If a boom airspeed system is not used, a “standard” airspeed system will become

excessively inaccurate at about 10° of sideslip. Rapidly yawing to the desired sideslip angle and noting and maintaining the new “standard” indicated airspeed may give adequate data. Control positions (directional as a minimum), sideslip angle, rotorspeed, airspeed, rate of descent, amount of ball deflection, and bank angle should be recorded. The pilot should note the physical sideforce feel experienced. The rule requires that sufficient cues accompany sideslip to alert the pilot when approaching sideslip limits. A minimum of two sideslip data points on each side of the trim point should be obtained to adequately define the slope of the pedal displacement versus sideslip angle relationship.

(v) Static directional stability plots can be expected to differ slightly on either side of the inherent sideslip angle. Positive static directional stability is indicated by increased left pedal displacement for a larger right sideslip and, conversely, increased right pedal for a larger left sideslip angle.

[See new AC 27.177A (dated 9/17/2009) posted as separate document in RGL with this Master AC.]

SUBPART B - FLIGHT

GROUND AND WATER HANDLING CHARACTERISTICS

AC 27.231. § 27.231 GROUND AND WATER HANDLING CHARACTERISTICS--GENERAL.

a. Explanation. The rule states: "The rotorcraft must have satisfactory ground and water handling characteristics, including freedom from uncontrollable tendencies in any condition expected in operation." In addition, §§ 27.235, 27.239, and 27.241 contain specific requirements concerning ground and water handling characteristic evaluations.

b. Procedures.

(1) During the flight test program and the F&R program (§ 21.35(b)(2)), the rotorcraft will be subjected to evaluations at various weight and CG conditions. Any uncontrollable tendencies found during these test programs must be corrected.

(2) Controllable or damped vibrations or oscillations on the ground or in the water are acceptable, provided the design limits of the rotorcraft are not exceeded.

(3) Any significant vibration or oscillation characteristics found during tests should be described in the test report, and the rotorcraft flight manual should contain appropriate descriptions and procedures to describe and either avoid or handle significant characteristics.

(4) For rotorcraft equipped with wheel gear, the evaluation should include takeoff, landing, and taxi at the maximum speed and at CG extremes. If a nose or tail wheel lock/swivel control is installed, each position should be evaluated for limiting takeoff, landing, and taxi speeds. Maximum substantiated speed values should be included in the RFM as limitations.

(5) For water operations, the wave height and frequency or "sea state" should be included as a limitation or, if no limit was reached during testing, the demonstrated values should be placed in the Performance Section of the RFM. Information or limits on the allowable "sea state" for rotor startup and shutdown should also be included.

AC 27.235. § 27.235 TAXIING CONDITION.

a. Explanation. The rotorcraft is designed for certain landing load factors (§§ 27.471 and 27.473). The rotorcraft must not attain a load factor in excess of the design load factor when taxied over the roughest ground that may reasonably be expected in normal operation at the expected taxi speeds. This rule applies to wheel landing gear equipped rotorcraft.

b. Procedures. The structural substantiation data contain the allowable design limits for the rotorcraft. A calibrated accelerometer or load factor “g” meter should be installed as near as practicable to the rotorcraft CG to record the maximum vertical load factor attained. Instrumentation of the landing gear and/or related structure may also be an acceptable means of showing compliance.

(1) Calibrated instrumentation should be installed to record the maximum loads or maximum vertical load factor attained during the taxi tests.

(2) The taxi surface should be evaluated for compliance with the rule. Corrugated surfaces as well as broken or uneven surfaces (in accordance with the rule) should be used.

(3) Representative typical taxi speeds, up to the maximum selected by the applicant, should be attained over the selected taxi surfaces.

(4) A light and heavy rotorcraft weight condition should be evaluated.

(5) Limitations appropriate for the rotorcraft design should be included in the flight manual. If these tests indicate that it is unlikely that limit load factors will be attained while taxiing, flight manual limitations may not be necessary.

(6) Pertinent taxi information obtained from these test conditions may be included in normal procedures of the flight manual.

AC 27.239. § 27.239 SPRAY CHARACTERISTICS.

a. Explanation. The intent of this requirement is to evaluate by demonstration that water spray does not obscure visibility (day or night) or damage the rotorcraft during normal waterborne operation (for those rotorcraft which have waterborne or amphibious capability).

b. Procedures.

(1) The following maneuvers should be evaluated in ambient conditions up to the proposed sea state or wave height for operation.

Con-fig.	Condition	Weight	CG	Rotor RPM	Alti-tude	Remarks
1	Taxi	Max	Optional	Max	SL	Speeds up to maximum proposed for water operation.
2	Hover	Max	Opt	Max	-	Determine critical hover height, if any.
3	Takeoff	Max	Opt	Max	SL	Unstick at maximum proposed water operation speed.
4	Land	Max	Opt	Max	SL	Touchdown at maximum proposed for water operation.
5	Shutdown	Opt	Opt	-	SL	Shut down the rotorcraft.
6	Start	Max	Opt	Max	SL	Start engines and release rotor brake.

(2) The maximum sea state or wave height evaluated under this rule should be stated and included in the limitations section of the flight manual.

(3) The effect of saltwater contamination and deterioration of turbine engines and other component parts of the rotorcraft should be considered in accordance with § 27.609 and paragraph AC 27.609. Information on saltwater effect and attendant corrective action should be provided in the flight manual, if appropriate, and in the maintenance manual.

AC 27.241. § 27.241 GROUND RESONANCE.

a. Explanation.

(1) The rule states: “The rotorcraft may have no dangerous tendency to oscillate on the ground with the rotor turning.” This rule is a flight requirement that pertains to demonstrating freedom from dangerous oscillations on the ground. CAR Part 6, predecessor to FAR Part 27, originally contained a “strength requirement” under § 6.203 requiring ground vibration tests. These tests would identify critical vibration frequencies and modes of the rotorcraft. CAR Part 6, Amendment 6-4, effective October 1, 1959, removed this ground vibration requirement because the agency concluded that if any major component has a natural frequency which could be excited by some operating parameter, such a condition would be revealed in the course of other ground and flight tests. The FAA/AUTHORITY apparently was depending on demonstrations under § 6.131/§ 27.241 and the flight load survey data (§ 27.571) to satisfy the objective of the vibration test. However, Part 27, Amendment 27-2,

contained new § 27.663 adding reliability and damping action investigation requirements for ground resonance prevention means. A ground vibration survey was not reinstituted by the adoption of § 27.663. Compliance with § 27.663 does require investigation and substantiation as stated.

(2) “Ground resonance” is a mechanical instability of the aircraft while in contact with the ground, often when partially airborne. Stated another way “ground resonance” is a self-excited mechanical instability that involves coupling between the in-plane motion of the rotor blade and the motion of the rotorcraft as a whole on its landing gear (reference “Aerodynamic of the Helicopter,” Gessow & Myers, page 308). It is caused by the motion of the blade in the plane of rotation (called in-plane vibration) coupled with a rocking or vertical motion of the aircraft as a whole. The tires, landing gear, and rotor pylon restraint structure act as a spring with a vibration frequency which coincides or couples with the natural in-plane frequency of the blade about a real or effective drag hinge in the plane of rotation. When the frequencies of the two motions (rotor and airframe) approach each other and couple, a violent shaking of the rotorcraft may occur which, if undamped, could result in the destruction of the rotorcraft.

(3) Ground resonance can occur due to flexibility in the rotor pylon restraint system as well as with landing gear flexibilities. This mode of vibration or resonance can happen in flight (called air resonance) as well as on the ground and should be addressed in the certification program. The evaluation should include variations in stiffness and damping that could occur in service to the rotor pylon restraints.

(4) Ground resonance may be prevented by placing the first order in-plane vibration frequency above the rotor turning speed.

(5) For such configurations which are not susceptible to ground resonance (first order in-plane frequency above rotor turning speed), a simple rotor RPM run-up and run-down with appropriate cyclic control displacement (i.e., excitation of any inherent vibrations) is adequate demonstration that a ground resonance condition does not exist. Unhinged “rigid” rotors, such as Bell Helicopter two-blade designs, are this type of rotor system.

(6) For configurations that are susceptible to ground resonance (i.e., first in-plane frequency is below the rotor turning speed), ground resonance is generally prevented by dampers on the blade acting in the plane of rotation, dampers on the landing gear (sometimes serving as oleo struts), or proper placement of the landing gear frequencies combined with rotor and/or landing gear dampers.

(7) Elastomeric components (in the rotor pylon support system, possibly in the landing gear, and possibly in the rotor head) are significantly affected by ambient temperature prior to warm-up. Their damping characteristics require thorough investigation for the range of rotorcraft operating environment as noted in § 27.663.

b. Procedures.

(1) Under all conditions, any oscillations which may be introduced should be damped. However, no instability should occur at any operating condition such as during RPM changes from minimum to maximum and idle to maximum. For rotorcraft with wheel gear, uneven taxi surfaces in conjunction with particular taxi speeds, may excite ground resonance and should be evaluated by taxiing on typical surfaces. This evaluation may be conducted in conjunction with the tests of § 27.235. In operation, the resonance characteristics should be checked during takeoff and landing at zero speed and during run-on landings using various power values.

(2) For those aircraft equipped with Stability Augmentation Systems (SAS), all ground resonance investigations should be conducted with SAS on and SAS off. This includes the hovering and running takeoffs and landings, taxi tests, and specific ground resonance tests noted herein. Consideration should be given to conducting tests in various SAS configurations such as roll channel on and pitch channel off, where such configurations are possible and authorized.

(3) For each rotorcraft configuration tested, the aircraft should be positioned on the ground in flat pitch with the rotor stabilized at the minimum practical rotational speed or optionally at a speed shown analytically to have significant margin from indicated resonant conditions. Control system inputs should be used to disturb the system for evaluation of subsequent damping.

(4) For each incremental increase in rotor speed and for each rotor speed setting at increments of collective pitch settings, cyclic and collective inputs should be investigated prior to proceeding to the next rotor speed setting. These inputs should cover the appropriate range and combinations of amplitude and frequency. The collective pitch setting increments should range from flat pitch to light on the landing gear prior to fully airborne, depending upon the test sequence for minimum risk.

(5) Cyclic pitch inputs should be made either by the pilot through the cyclic stick or through a signal-generating device working in conjunction with the cyclic controls. For each frequency of input, amplitude of the inputs should be increased incrementally and ultimately should be large enough to generate responses representative of normal ground and flight operation on the rotor and support system. The inputs should continue for a time sufficient to obtain representative responses, typically time sufficient to execute five complete circles of the cyclic stick (about neutral) at the selected frequency.

(6) The excitation frequency should be such as to excite the blade in-plane frequency. Rotor speed settings should be increased to 1.05 times the maximum power-on rotor speed. Collective pitch settings should be increased in increments of not more than 20 percent to maximum collective or alternately to the collective setting required to become partially airborne (when the cyclic is displaced as noted).

(7) Typically, articulated rotor aircraft have natural frequencies on the blade in lag of approximately 0.3 times the power-on main rotor RPM. Soft in-plane rotors have natural frequencies approximately 0.7 times the main rotor RPM. Therefore, for example, for a rotorcraft with an in-plane frequency of 0.3/rev, operating at 300 RPM, and with 6 inches of total lateral cyclic stick displacement, the stick should be rotated for 5 revolutions in a 0.6-inch-diameter circle at ((1-.03) x 300 RPM) or 3.5 cycles per second to attempt excitation of possible resonant frequencies. At the conclusion of the excitation, the cyclic stick should be returned to the neutral position while continuing the recording of data listed in paragraph b(13).

(8) The excitation process should include cyclic excitation inputs from the directional and longitudinal controls if critical for the type of rotorcraft being evaluated.

(9) If onset of ground resonance is encountered, one possible corrective action is to increase the collective pitch and rotor speed and become airborne. However, lowering the collective pitch and applying the rotor brake (if installed) or rolling off the throttles has been effective for some designs and is considered a satisfactory procedure if resonance can be consistently stopped.

(10) With the rotor speed stabilized, landing should be made at a touchdown speed which minimizes risk.

(11) Special Considerations.

(i) The influence of variables, including environmental effects, corresponding aircraft component characteristic changes, operational parameters, and surface conditions should be investigated over the ranges proposed for certification. Additionally, the potential of misservicing and possible failure modes should be evaluated. For ground resonance qualification, where practical, variations from the baseline test configuration may be accomplished by ground run (§ 27.663(b) requires investigation of probable ranges of damping), analyses, component tests, aircraft shake test, the specification of special operational procedures in the rotorcraft flight manual, or a combination thereof. Detailed and rational analyses showing acceptable correlation to the baseline tests, and for which the input parameters were verified by drawings, calculations, component static or dynamic tests, or by aircraft shake tests simulating the conditions/configurations in question, may be used to limit testing to only those variables and operational conditions showing marginal or unacceptable system damping. All operational limitations should be clearly stated in the rotorcraft flight manual. A report of the analytical results and/or test results should be submitted per § 27.663.

(ii) Potential instability while airborne, called “air resonance,” may occur due to the dynamic coupling of the rotor flexibility and the pylon restraint flexibility. The same considerations apply to air resonance as to ground resonance except that the pylon restraint variables replace the landing gear variables. Air resonance should be addressed in the certification program.

(iii) When operating on the ground, there may be a tendency for the aircraft to exhibit a “ground bounce.” For many configurations, this is a benign, although undesirable phenomenon which may be aggravated by pilot induced oscillations (PIO), particularly if there is little or no friction on the collective.

(12) Rotorcraft with fully articulated rotor heads and landing gear oleos in either skid or wheel configuration have tendencies for ground bounce to occur when light on the oleos, either just prior to takeoff, just after landing contact, or during a power assurance check. This bounce may induce ground resonance, particularly if the intensity of the bounce is aggravated by PIO. The corrective action is either to lift off to a hover or to positively lower the collective and remain on the ground..

(13) Instrumentation and Data Acquisition.

(i) Atmospheric Conditions (to be manually noted):

(A) Altitude.
(B) OAT.
(C) Wind velocity.

(ii) Aircraft Configuration (to be manually noted):

(A) Gross weight.
(B) C.G.
(C) Tire pressure.
(D) Landing gear oleo pressure.

(iii) Instrumentation (for recording during test).

(A) Main rotor RPM.
(B) Time history of cyclic control fore-and-aft and lateral stick position.
(C) Time history of collective control stick position.
(D) Time history of rotor damper motion.*
(E) Time history of pylon component motion.*
(F) Time history of landing gear (oleo) motion.*
(G) Time history of aircraft motions.*

*As required to obtain modal damping

SUBPART B - FLIGHT

MISCELLANEOUS FLIGHT REQUIREMENTS

AC 27.251. § 27.251 VIBRATION.

a. Explanation.

(1) Each part of the rotorcraft must be free from excessive vibration under each appropriate speed and power condition (rule statement).

(2) This flight requirement may be both a qualitative and quantitative flight evaluation. Section 27.571(a) contains the flight load survey requirement that results in accumulation of vibration quantitative data. Section 27.629 generally requires quantitative data to show freedom from flutter for each part of the rotorcraft including control or stabilizing surfaces and rotors.

(3) Review Case No. 70 (reference FAA Order 8110.6) contains a policy statement concerning compliance with this rule. This policy statement is condensed here for convenience:

"The rotorcraft must be capable of attaining a 30° bank angle (turn), at V_{NE}, with maximum continuous power (maximum continuous torque) without encountering excessive roughness/vibration. The FAA/AUTHORITY requires the maneuver demonstration to provide the pilot with some maneuver capability at V_{NE} and further to provide the pilot some margin away from roughness when operating in turbulence." (This maneuver may result in a descent or a climb.)

(4) Section 27.1505 pertains to V_{NE} determination. Section 27.1509 pertains to rotor speed limits determination.

b. Procedures.

(1) During the company flight test program, the rotorcraft is flown to the appropriate rotor and airspeed limits at several weights to prove that the rotorcraft is free from excessive vibration under appropriate speed, power, and weight conditions. The flight loads survey quantitative data (reference § 27.571) and the applicant's qualitative and quantitative flight test data must also prove compliance with the requirement prior to issuing an authorization for official FAA/AUTHORITY flight tests.

(2) The flight load survey data obtained under § 27.571(a) will contain measured data concerning proof of freedom from flutter and excessive vibration. Pertinent critical flight conditions will be reinvestigated during FAA/AUTHORITY flight tests. The specific condition or conditions necessary to demonstrate compliance with § 27.251 vary with the rotorcraft design and with the minimum and maximum rotor

speeds, V_{NE} and V_D speeds, and weight and CG position. An illustration of the speed and RPM demonstration is shown in figure AC 27.251-1. (Also see paragraph AC 27.251b(4).)

(3) The airspeed and rotor speed limits investigated and established under §§ 27.33, 27.1503, 27.1505, and 27.1509 are also investigated and made a matter of record in the flight loads survey data. During the official FAA/AUTHORITY/TIA flight tests, critical parts of the rotorcraft may have limited instrumentation to reinvestigate and confirm that the critical conditions investigated during the flight load survey are satisfactory and do not result in excessive vibration. Use of instrumentation is optional if the flight loads data are conclusive.

(4) FAA/AUTHORITY policy for certification (Review Case No. 70) requires a “rotor roughness” flight demonstration of a 30° bank angle left and right at maximum continuous power (MCP) (maximum continuous torque which may be in excess of the maximum continuous temperature limit) at V_{NE}. To provide the pilot with some margin from roughness, the FAA/AUTHORITY requires maneuver demonstrations of 30° banked turns at V_{NE} without encountering excessive roughness. The maneuver should be conducted with the rotor speed at the minimum RPM and maximum RPM limits. During the flight load survey, this condition should be investigated and data recorded to ensure hazardous loads are not encountered for this “unusual” condition. As indicated, the flight condition will be reinvestigated during the FAA/AUTHORITY flight tests. See paragraph AC 27.251b(2) for illustration of this speed and RPM demonstration.

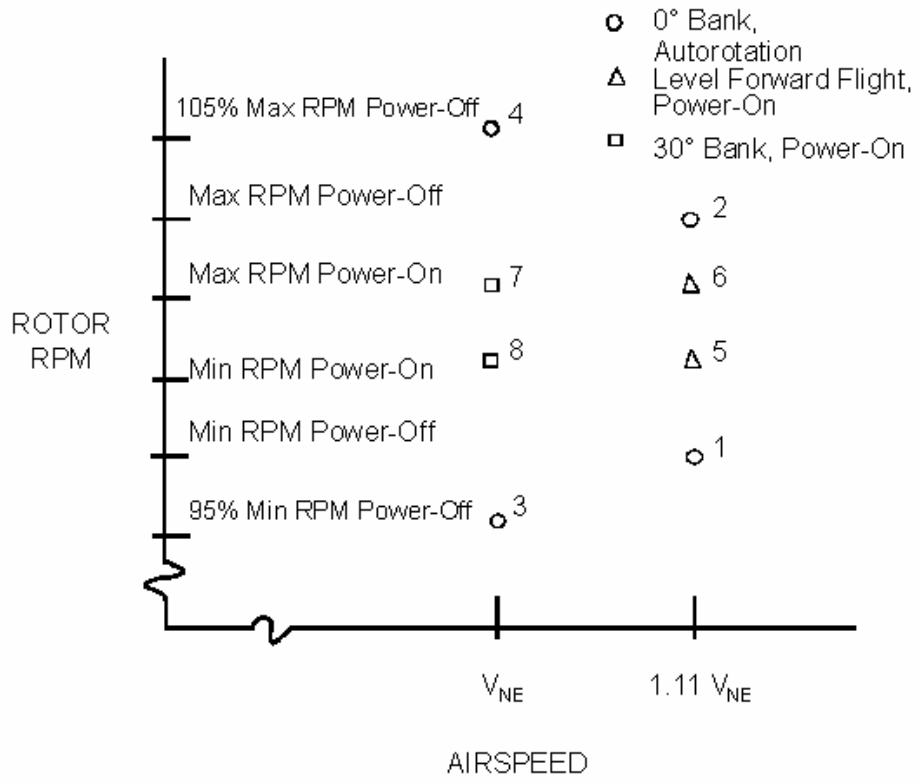

1. Autorotation at 1.11 $V_{NE\ (AR)}$ at minimum placard rotor speed.
2. Autorotation at 1.11 $N_{NE\ (AR)}$ at maximum placard rotor speed.
3. Autorotation at $N_{NE\ (AR)}$ at power-off minimum design limit rotor speed.
4. Autorotation at $N_{NE\ (AR)}$ at power-off maximum design limit rotor speed.
5. Forward flight 1.11 V_{NE} at minimum power-on rotor speed.
6. Forward flight 1.11 V_{NE} at maximum power-on rotor speed.
7. Right and left turn at V_{NE} at maximum power-on rotor speed with 30° bank angle.
8. Right and left turn at V_{NE} at minimum power-on rotor speed with 30° bank angle.
   Note: $V_{NE\ (AR)}$ may be less than V_{NE} .

FIGURE 27.251-1 DEMONSTRATION POINTS

CHAPTER 2. PART 27
AIRWORTHINESS STANDARDS
NORMAL CATEGORY ROTORCRAFT

SUBPART C - STRENGTH REQUIREMENTS

STRENGTH REQUIREMENTS - GENERAL

AC 27.301. § 27.301 LOADS.

a. Explanation.

(1) The rule is a general statement concerning limit and ultimate loads and the application of these loads to the rotorcraft.

(2) Ultimate loads are limit loads multiplied by the prescribed factors of safety.

(3) The specified loads are specified to be distributed appropriately or conservatively and significant changes in distribution of the loads, as a result of deflection, are specified to be taken into account.

b. Procedures. The design criteria report and/or design loads report should contain data that comply with the rule.

AC 27.303. § 27.303 FACTOR OF SAFETY.

a. Explanation.

(1) Unless otherwise provided by Part 27, a factor of safety of 1.5 is required and is applied as stated in the rule. This safety margin will ensure that the design strength of the rotorcraft is greater than the design loads contained in Part 27.

(2) Other rules, §§ 27.561(b)(3) and 27.787(c), specify use of defined ultimate inertial forces for protection of occupants.

b. Procedures.

(1) The design criteria report and/or design loads report should contain data that include the appropriate factor of safety.

(2) The factor of safety multiplies the limit external and inertial loads. The rule does allow the application of this factor to the resulting “limit internal” stresses if it is more conservative.

AC 27.305. § 27.305 STRENGTH AND DEFORMATION.

a. Explanation.

(1) This general rule defines, in relative terms, allowable deformation for limit and ultimate loads.

(2) The structure is required to be able to support, in a static test, ultimate loads for 3 seconds without failure, or dynamic tests simulating actual load application may be used.

(3) Section 27.307 concerns proof of the structure and requires certain specified tests. This rule also allows substantiation by structural analysis. See paragraph AC 27.307.

b. Procedures. Any test results, static or dynamic, should satisfy the limitations or acceptance criteria contained in the rule.

(1) Any test proposals submitted for approval that are used to demonstrate compliance with sections of Part 27 should contain the criteria stated in the rule.

(2) Any test results reports shall contain data and information showing the test results comply with the standard.

AC 27.307. § 27.307 (Amendment 27-3) PROOF OF STRUCTURE.

a. Explanation.

(1) The rule requires compliance with the strength and deformation requirements for each critical loading condition. Certain tests must be conducted as specified. Additional tests for new or unusual design features may be required as noted in § 27.307(b)(6).

(2) Structural analysis rather than load tests may be used only if the structure conforms to those for which experience has shown the structural analysis method to be reliable.

b. Procedures.

(1) The design criteria and/or design loads report should contain typical or representative loading conditions from which the critical loading conditions will be selected for analytical substantiation in structural (static and fatigue) reports, dynamics (vibration and stability) reports, and in fatigue, static, dynamic, or operational test reports.

(2) Whenever tests are used or required, a test proposal or plan should be approved prior to the tests. The test article should have received conformity inspections and should have been accepted by the FAA/AUTHORITY for the test. Test fixtures and instrumentation should also be acceptable to the FAA/AUTHORITY (using DERs as appropriate) prior to the start of the test. The quality control office of the applicant or other qualified personnel may be authorized to conduct inspections of the test fixtures and instrumentation rather than the FAA/AUTHORITY or DER performing this task. The test proposal may be used to define and to authorize the means to accomplish inspection of the test fixtures and instrumentation. Unnecessary drawings such as test fixture details or layering of approvals are not intended or envisaged by this policy. Drawings, sketches, or photographs have been used by the FAA/AUTHORITY to control and to ensure correct location, direction, and magnitude of loads and other critical test parameters.

(3) Structural analysis has been accepted for rotorcraft in place of static tests. Generally, the rotorcraft airframe should have natural frequencies remote to predominant rotor excitation sources, including higher harmonics, to avoid undesirable and possibly excessive vibration and potentially high operating stress levels due to this vibration. During the flight load measurement program conducted under § 27.571, critical loaded areas or critical joints may be instrumented with strain gages or other stress strain measuring devices. This actual flight data should be compared to the analytical data to verify accuracy.

(4) Paragraph (b) of the rule specifies certain tests. Test proposals should be approved prior to conducting official FAA/AUTHORITY tests. Other paragraphs in this advisory circular pertain to those tests.

AC 27.307A. <u>§ 27.307 (Amendment 27-26) PROOF OF STRUCTURE</u>.

a. <u>Explanation</u>. Amendment 27-26 adds the requirement to account for the environment to which the structure will be exposed in operation. This change is intended to codify recent FAA/AUTHORITY and industry practices for the consideration of environmental effects in showing “proof of structure.”

b. <u>Procedures</u>. All of the policy materials pertaining to this section remains in effect with the following additions:

(1) For either tests or an analysis, environmental effects are now explicitly required. Consideration of loss of strength and stiffness of metals with elevated temperatures and loss of strength and stiffness of composite materials from exposure to heat, moisture, or other operational environments is now required and should be documented in analyses and test reports.

(2) MIL-HDBK-5F; AC 20-107B; or MIL-HDBK-17, Vol. I, Rev 1E; Vol. II, Rev. D; Vol. III, Rev E (or later versions) are acceptable sources of data and procedures

to show compliance with environmental effects of metallic and composite materials, respectively.

AC 27.309. § 27.309 DESIGN LIMITATIONS.

a. Explanation.

(1) The rule requires an orderly selection and presentation of the basic structural design limitations of the rotorcraft. The applicant is required to establish these structural limitations to facilitate design of the rotorcraft.

(2) Refer to the rule for the specific requirements.

b. Procedures.

(1) The design criteria and/or design load report should contain the design limits specified.

(2) These items are structural design limits. Other requirements may result in narrowing the ranges of type design limits or in reducing limits. It is not necessary to revise structural design criteria limits to agree with more conservative operational limits established during the certification program. The operational limits may be subsequently expanded by additional flight tests to agree with design limits.

SUBPART C - STRENGTH REQUIREMENTS

FLIGHT LOADS

AC 27.321 § 27.321 (Amendment 27-11) FLIGHT LOADS--GENERAL.

a. Explanation.

(1) The rule specifies the way the loads will be applied to the rotorcraft. It requires load analysis from minimum to maximum design weight. Any practical distribution of disposable loads must be included in the analysis.

(2) Paragraph (a) of the rule states: "The flight load factor must be assumed to act normal to the longitudinal axis of the rotorcraft, and to be equal in magnitude and opposite in direction to the rotorcraft inertia load factor at the center of gravity."

b. Procedures.

(1) Derivation of the flight loads is required by and specified in §§ 27.337 through 27.351. This rule requires flight load determination from minimum to maximum weight and for disposable loads.

(2) The application of the design loads derived from the flight load factor will be as specified. The flight loads analysis data must comply with the rule.

AC 27.337 § 27.337 (Amendment 27-26) LIMIT MANEUVERING LOAD FACTOR.

a. Explanation. The rotorcraft must be designed and substantiated to load factors as specified to provide a minimum level of structural integrity of the rotorcraft airframe and rotors.

(1) A range of design positive load factors from +3.5 to +2.0 may be used.

(2) A range of design negative load factors from -1.0 to -0.5 may be used.

(3) Load factors inside the range of +3.5 to -1.0 may be used provided the probability of exceeding the design load factors is shown by analysis and flight tests to be extremely remote and the selected load factors are appropriate to each weight condition between design maximum and minimum weight.

(4) Load factors exceeding these "minimums" may be used.

b. Procedures.

(1) The applicant may elect to substantiate the rotorcraft for a design maneuvering load factor less than +3.5 and more than -1.0. Whenever this option is used, an analytical study and flight demonstration are required.

(i) The maximum positive design load factor of +3.5 is generally at a weight below maximum gross weight. The maximum thrust capability of the main rotor, combined with incremental lift of wings or sponsons, if installed, results in a maximum design positive load factor. An example of a load factor-gross weight curve is shown in figure AC 27.337-1. Note the minimum positive design load factor is +2.0 even though the required analysis and flight demonstration may prove the rotorcraft is not capable of achieving this load factor. This curve also illustrates compliance with § 27.321(b)(1) since the design load factor varies with gross weight.

(ii) The largest negative design load factor is -1.0; however, several current rotorcraft designs are not capable of achieving a negative load factor. Therefore, -0.5 has been an acceptable structural design negative load factor for certain rotorcraft designs.

(2) Whenever the applicant analytically substantiates the lower load factors allowed by § 27.337(b), the flight demonstration required by § 27.337(b) must be conducted. The flight test personnel should determine that the demonstration shows the probability of exceeding the selected design load factors (those factors less than +3.5 and more than -1.0) is extremely remote. (See Order 8110.4, paragraph 166c(2)(c)).

(3) A numerical value has not been assigned to “extremely remote” in this standard.

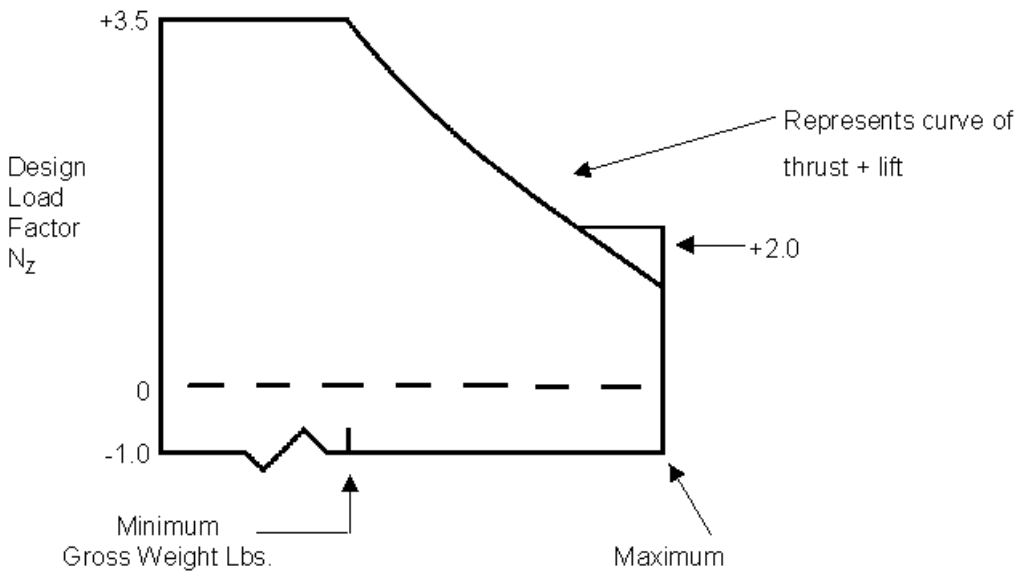

LOAD FACTOR GROSS WEIGHT CURVE

FIGURE 27.337-1

AC 27.339 § 27.339 (Amendment 27-11) RESULTANT LIMIT MANEUVERING LOADS.

a. Explanation. The rule specifies or defines the application of rotor and lift surface loads to the rotorcraft.

(1) The design maneuvering load factors required by § 27.337 will result in or be derived from rotor thrust or lift and from auxiliary surface lift.

(2) Sections 27.321, 27.337, and 27.341 all complement one another and result in the derivation of design flight loads that will be imposed to ensure structural integrity of the rotorcraft.

(3) The following assumptions and conditions are specified in the rule.

(i) The rule requires application of appropriate loads at each rotor hub and auxiliary lifting surface.

(ii) Power-on and power-off flight with maximum design rotor tip speed ratio and specific conditions that must be considered.

(iii) Rotor tip speed ratio, defined in the rule, has been carried forward from the initial rotorcraft certification rules issued in 1946. The rotor tip speed ratio is a basic parameter used in calculating rotor aerodynamic forces.

b. Procedures.

(1) The rule specifies an acceptable assumption concerning application of the rotorcraft maneuvering loads.

(2) The rotor tip speed ratio is a parameter found in textbooks and other books such as NACA Report No. 716. The equation in the rule contains angle “a.” Report No. 716 also defines angle “a” as the angle of attack of the rotor disk. This definition is more easily understood than the definition contained in the rule.

(3) The rotorcraft design loads are derived as prescribed by §§ 27.321, 27.337, and 27.341. These loads are applied to the rotor or rotors and any auxiliary surface as prescribed by this rule.

AC 27.341 § 27.341 GUST LOADS.

a. Explanation.

(1) The rotorcraft must be substantiated for the loads derived from 30 feet per second vertical gusts from hovering to 1.11 V_{NE} (i.e., V_D).

(2) Gust loads for any horizontal stabilizing surface should be derived for vertical gusts, upward and downward.

b. Procedures.

(1) Either sharp-edged (instantaneous) gusts or sharp-edged gusts modified by an alleviation (attenuation) factor may be used for calculating aerodynamic loads for the rotorcraft and any installed stabilizing surfaces. The following conditions may be used:

(i) Vertical gusts may be considered normal to the flight path of the rotorcraft except during hover or low speed flight (20 knots or less) when the gusts may be assumed normal to the longitudinal axis of the rotorcraft.

(ii) A primary effect of encountering the gust is to change the lift of the rotors and rotorcraft surfaces. Of primary concern is the gust load or lift created by the main rotor or rotors. The lift increment of the horizontal stabilizing surface and fuselage is generally negligible when compared to the rotor and may be neglected for the rotorcraft gust load determination if proven negligible by analysis.

(iii) The rotorcraft shall be assumed in stabilized level flight prior to meeting the gust.

(iv) The gust velocity may be assumed uniform across the rotorcraft.

(v) Gust loads on the stabilizing surfaces are required as stated in paragraph AC 27.413.

(2) The rotorcraft design maneuvering load factors may generally exceed the design gust load factors calculated in compliance with this rule. This may be attributed to the small incremental change in lift due to the 30 FPS gust. Nonetheless, design gust loads for the rotorcraft shall be calculated as specified in the rule to ensure the rotorcraft maneuvering load factors do, in each case, exceed the design gust load factor.

(3) For further information about rotorcraft gust response characteristics, see Paper No. 9 presented at the AHS/NASA -Ames Specialist's Meeting on Rotorcraft Dynamics, February 13-15, 1974. The paper, entitled, "Helicopter Gust Response Characteristics Including Unsteady Aerodynamics Stall Effects," was written by P.J. Arcidiacono, R.R. Berquist, and W.T. Alexander, Jr. References listed in the paper may be helpful also.

AC 27.351. § 27.351 (Amendment 27-26) YAWING CONDITIONS.

a. Definitions.

(1) Suddenly. For the purpose of this section, 'suddenly' is defined as an interval not to exceed 0.2 seconds for complete control input. A rational analysis may be used to substantiate an alternative value.

(2) Zero Yaw. Normal, 1-g, level flight condition with either zero bank angle or zero sideslip.

b. b. Explanation. The rule requires a rotorcraft "structural" yaw or sideslip design envelope. This sideslip envelope must cover minimum forward speed, or hover, to V_H or V_{NE}, whichever is less. The rotorcraft must be structurally safe for the thrust capability of the directional control system.

(1) The rotorcraft structure must be designed to withstand the loads for the specified yawing conditions. The standard does not require a structural flight demonstration. It is a structural design standard.

(2) This standard applies only to power-on conditions. Autorotations need not be considered.

(3) This standard requires the maximum allowable rotor RPM consistent with the flight conditions, including special operational rotor settings.

(4) For the purposes of this section, the analysis may be performed at international standard atmosphere (ISA) sea level conditions.

(5) The rotorcraft structure must be designed to withstand the loads for the specified sideslip conditions. This includes, but is not limited to:

(i) Main cabin, tailboom, and vertical control surfaces.

(ii) Tail rotor structures, including the fitting attachments to the frame.

(iii) Windows, doors, and other transparencies.

(iv) Landing gear and retracting mechanism.

(v) Fairings and cowlings.

(6) Maximum displacement of the directional control, except as limited by pilot effort (§ 27.397(a)), is required for the conditions cited in the rule. Control system limiting devices may be used, however the probability of failure or malfunction of these system(s) should be considered (see Figure AC 27.351-2). This evaluation may include Flight Manual Limitations, if failure of the system is reliably indicated to the crew.

(7) Both right and left yaw conditions should be evaluated.

(8) For vertical stabilizers, the airloads may be assumed independent of the tail rotor thrust (superpositioning).

(9) Loads associated with sideslip angles exceeding the values of Figure AC 27.351-1 do not need to be considered. The corresponding points of the maneuver may be deleted.

c. Procedure. The design loads should be evaluated within the limits of Figure AC 27.351-1 or the maximum capability of the rotorcraft, whichever is less; at speeds from zero to V_H or V_{NE}, whichever is less, for the following phases of the maneuver:

(1) With the rotorcraft at an initial trim condition (1 g level flight and zero yaw), the cockpit directional control is suddenly displaced to the maximum deflection limited by the control stops or by the maximum pilot force specified in § 27.397(a). This is intended to generate a high tail rotor thrust.

(2) While maintaining maximum cockpit directional control deflection, within the limitation specified in c(1) of this AC paragraph, allow the rotorcraft to yaw to the maximum transient sideslip angle or to the value defined in Figure AC 27.351-1, whichever is less. This is intended to generate high aerodynamic loads.

(3) Allow the rotorcraft to stabilize at the maximum steady-state sideslip angle. In the event that the maximum steady state angle is greater than the value defined in Figure AC 27.351-1, the rotorcraft should be trimmed to the value of the angle using less than maximum cockpit directional control deflection.

(4) With the rotorcraft yawed to the static equilibrium sideslip angle specified in c(3) of this AC paragraph, the cockpit control is suddenly returned to its initial trim position. This is intended to combine a high tail rotor thrust and high aerodynamic restoring forces.

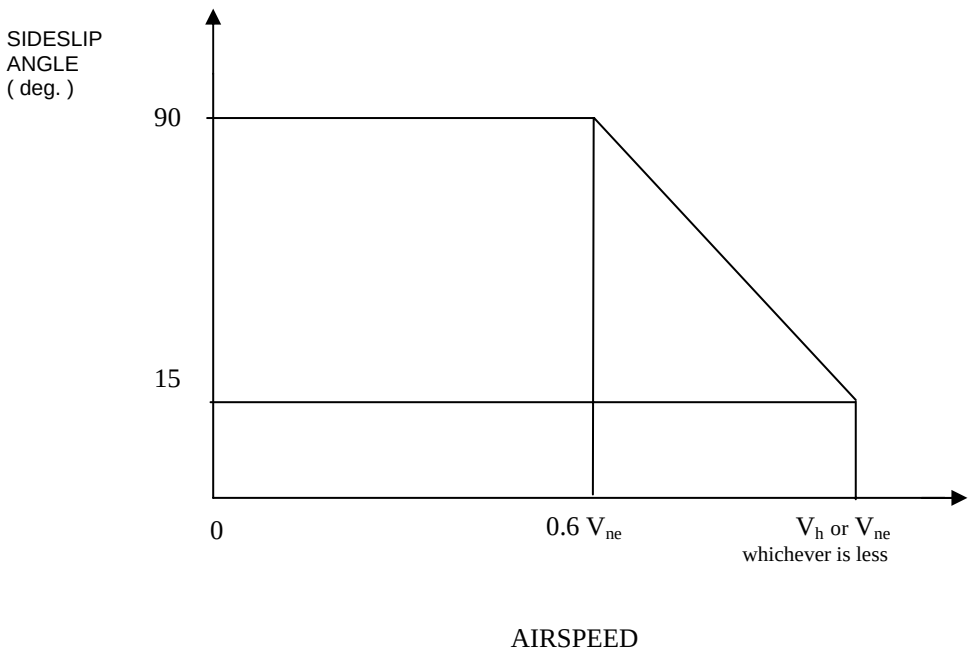

Figure AC 27.351-1
Safety Factors for Probability of Failure

- **For static strength substantiation, each part of the structure should be able to withstand without failure, the loads generated by the maneuver described in the rule multiplied by a factor of safety depending on the probability of being in this failure state. The factor of safety is defined in the figure below:**

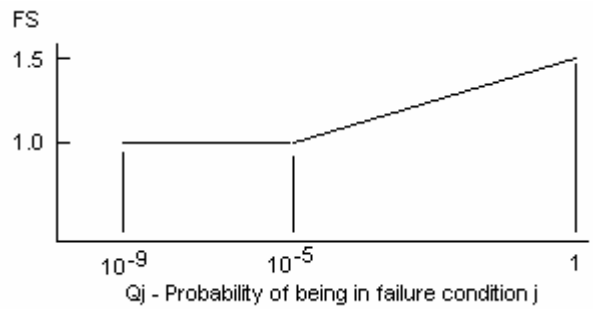

$Q_j = (T_j)(P_j)$

where:

T_j = Average flight time spent with a failed control limiting system j (in hours)

P_j = Probability of occurrence of failure of the control limiting system j (per hour)

<u>Note</u>: If P_j is greater than 10^{-3} per flight hour then a 1.5 factor of safety should be applied to all limit load conditions specified in this standard.

Figure AC 27.351-2

AC 27.361 § 27.361 (Amendment 27-23) ENGINE TORQUE.

a. Explanation.

(1) The rotorcraft shall be designed for limit engine torque values, as prescribed by the rule, to account for maximum engine torque, including certain transients and torsional oscillations. Amendment 27-23 separated the standard into paragraphs for turbine and reciprocating engine limit torque values.

(2) Turbine engine limit torque for design purposes (Amendment 27-23) was redefined into four cases and the torque values determined will be used. For example, sudden engine stoppage is introduced as one of the cases which is applied to the engine and the engine suspension and restraint system. Emergency operation of governor-controlled turboshaft engines is another case.

(3) Torque factors are also specified for reciprocating engines having two or more cylinders in paragraph (b) of the standard.

(4) Sections 27.547(e)(1)(ii) and 27.549(d), respectively, refer to the application of engine torque to design of main rotor structure and engine mount and adjacent structure.

b. Procedures.

(1) The engine torque associated with the maximum continuous (MC) power condition for reciprocating engines should be multiplied by the appropriate torque factor to obtain the limit engine torque value used for structural substantiation of the rotorcraft.

(2) The torque values associated with MC power at the minimum power-on RPM limit should be used. Maximum power-on speed limit will result in a lower torque value when calculating torque from design horsepower values. However, due to piston engine power output characteristics, an engine may produce a higher torque at higher engine speeds contrary to the previous statement. The torque factor should account for this characteristic.

(3) Turbine engine limit torque values are determined for the four cases specified. Two cases are related to the endurance test of §§ 27.923 and 27.927.

(4) For sudden stoppage of turbine engines the engine manufacturers can reasonably provide FAA/AUTHORITY approved data to the applicant on inertia of rotating parts and the deceleration time expected in the event of sudden engine stoppage. This condition usually generates critical loads in the engine mounting and restraint system. These manufacturer’s data should be acceptable for use in compliance with this part of the standard.

SUBPART C - STRENGTH REQUIREMENTS

CONTROL SURFACE AND SYSTEM LOADS

AC 27.391. § 27.391 CONTROL SURFACE AND SYSTEM LOADS--GENERAL.

a. Explanation. This general standard concerns requirements for design loads of tail rotors, control or stabilizing surfaces, and their control system.

b. Procedures. The design criteria and/or the design loads report shall contain the loads dictated by the referenced rules. (See paragraphs AC 27.395, AC 27.397, AC 27.399, AC 27.401, AC 27.403, AC 27.411, and AC 27.413.)

AC 27.391A. § 27.391 (Amendment 27-26) GENERAL.

a. Explanation. Amendment 27-26 adds an explicit reference to § 27.427, Unsymmetrical Loads (paragraph AC 27.427), to clarify that substantiation for unsymmetrical loads is a general control surface requirement. A reference to § 27.399, Dual Control System (paragraph AC 27.399), is also added for clarification. In addition, §§ 27.401, 27.403, and 27.413 were removed by this amendment since these references and requirements were adequately addressed in other standards.

b. Procedures. The referenced AC paragraphs become paragraphs AC 27.395, AC 27.397, AC 27.399, AC 27.411, and AC 27.427.

AC 27.395. § 27.395 CONTROL SYSTEM.

a. Explanation. Control system design loads and the application of these loads are contained in this rule.

(1) Paragraph (a) of the rule specifies the way or means of reacting the minimum design loads specified in §§ 27.397 and 27.399 (for dual control systems). Except reduced design loads, not less than 0.60 of those specified in §§ 27.397 and 27.399 for dual control system, may be used as specified. The standard also applies to those control systems that may have more than one stop in a system. The design loads must be imposed on the system from the pilot's control to any stop in the control system.

(2) Minimum design loads imposed on the control system from a stop to a rotor blade or a control surface or device shall be:

(i) The maximum pilot forces obtainable in normal operation; and

(ii) If low operational loads may be exceeded as noted in § 27.395(b)(2), the system shall support without yielding 0.60 of the loads specified in §§ 27.397 and 27.399 for dual control systems.

(3) Section 27.695 concerns standards for a power boost and power-operated control system. This standard, in effect, imposes a fail-safe standard for hydraulic aspects of a control system. Where appropriate to a particular design, the control system must therefore sustain without yielding, the maximum output force of the actuator when complying with § 27.395(a). The pilot input forces are not added to the actuator output forces according to this standard for normal category rotorcraft. These forces are independently applied to the control system.

(4) Control system design features and tests requirements are found in §§ 27.619 and 27.625, respectively. Special factors such as casting, bearing, and fitting factors that may be appropriate for the design are contained in §§ 27.619 and 27.625, respectively.

b. Procedures.

(1) The design criteria and/or a design loads report that includes the primary control system design loads should be submitted for FAA/AUTHORITY approval.

(2) The rotorcraft control system may be tested to ultimate design loads or may be analyzed for the ultimate design loads. See paragraph AC 27.307.

(i) A static test proposal for testing the control system to show compliance with the rules should be approved before conducting the test. Where compliance is to be determined by tests, limit load tests, as discussed in paragraph AC 27.681, and/or ultimate load tests may be performed. Test results shall be documented.

(ii) If tests are not conducted, a structural analysis of the control system is required. Appropriate factors from §§ 27.623 and 27.625 must be used as specified. Tests may not be required when adequate similarity of systems and support structure is determined and where adequate structural analysis is furnished.

(3) If a part of the control system is not stiff or rigid enough to react the design loads specified in §§ 27.397 and 27.399, that part of the system may be substantiated for lower loads as prescribed.

(i) The limit design loads are those loads specified in §§ 27.397 and 27.399;

(ii) The maximum that can be obtained in normal operation and that is allowed by the system; except

(iii) The limit design loads may not be less than 0.60 of the limit pilot forces specified.

(iv) For example, if a small control surface or servo tab is lightly loaded, its control system must be stiff enough to react the control surface loads and to provide surface deflection to control the rotorcraft. The normal operational loads may be very low, such as 10 pounds maximum. Nonetheless, the design limit load shall be 0.60 times the limit single pilot forces specified in § 27.397. Note that the system must not yield under these loads.

(v) For example, if a dual but primary manual control system such as a tail rotor control is lightly loaded, the control system, from the stops to the rotor blades, may be designed for minimum loads equal to 0.60 times the limit dual pilot forces specified in § 27.399.

(vi) If a power actuator is a part of a rotor control system, the design limit force for the affected parts shall be the maximum output force of the actuator at any operational condition (including any load/pressure after a single failure in the hydraulic system).

(4) Controls proof and operation test is required by §§ 27.307(b)(2) and (b)(3), 27.681, and 27.683. This test is conducted using the design limit loads approved under § 27.395. (See paragraphs AC 27.681 and AC 27.683.)

AC 27.395A. § 27.395 (Amendment 27-26) CONTROL SYSTEM.

a. Explanation. Amendment 27-26 extensively rewrites § 27.395(b) to more clearly incorporate design condition loads for typical powered control systems. New requirements include substantiation for loads resulting from “each normally energized power device, including any single power boost or power activator failure in the control system.” There are also new minimum loads for control system designs in which operational loads may be exceeded through jamming, ground gusts, control inertia, or friction. The old loads were 0.60 times the limit pilot forces of § 27.397; the new loads are 100 percent of the limit pilot forces specified in § 27.397.

b. Procedures. The procedures of paragraph AC 27.395 continue to apply except that the increased loads in § 27.395(b)(4) of 100 percent of limit pilot forces are specified for systems where operational loads may be exceeded by jamming, ground gusts, control inertia, or friction.

AC 27.397. § 27.397 (Amendment 27-11) LIMIT PILOT FORCES AND TORQUES.

a. Explanation. Design forces are contained in the rule.

(1) Primary controls, pilot and copilot, should be designed for the limit pilot forces specified in paragraph (a) of the rule unless higher forces are used.

(2) For other operating controls, such as flap, tab, stabilizer, rotor brake, and landing gear, design limit forces are specified in paragraph (b).

b. Procedures.

(1) Design loads specified in the rule may be used in required structural tests and in any structural strength analysis of the control systems submitted in compliance with other rules.

(2) Operation tests of the control systems noted in other rules require application of these forces also.

AC 27.399. § 27.399 DUAL CONTROL SYSTEM.

a. Explanation. Design limit loads are specified for dual control systems. Pilot effort forces applied in opposition and in the same direction are required for dual control systems.

b. Procedures.

(1) Design loads specified in the rule may be used in required structural tests and in any structural strength analysis submitted for compliance with the other rules.

(2) Operation tests of the control systems, noted in other rules, require application of these forces also.

AC 27.401. § 27.401 (Amendment 27-3) AUXILIARY ROTOR ASSEMBLIES.

a. Explanation.

(1) For rotorcraft equipped with auxiliary rotors, normally called tail rotors, an endurance test is required by § 27.923, and structural strength substantiation is required. Section 27.401(b) specifically refers to structural strength substantiation of detachable blade systems for centrifugal loads resulting from maximum design rotor RPM.

(2) The rotor blade structure must have sufficient strength to withstand not only aerodynamic loads generated on the blade surface, but also inertial loads arising from centrifugal, coriolis, gyroscopic, and vibratory effects produced by this blade movement. Sufficient stiffness and rigidity must be designed into the blades to prevent excessive deformation and to ensure that the blades will maintain the desired aerodynamic characteristics. As a design objective, the structural strength requirements should be met with the minimum material. Excess blade weight imposes extra centrifugal loads

that may increase the operating stress levels. Blade weight and strength should be optimized. Even though a structural strength analysis for the blade design loads is required, a flight load survey and fatigue analysis are also required by § 27.571.

(3) Section 27.1509 defines the design rotor speed as that providing a 5 percent margin beyond the rotor operating speed limits.

b. Procedures.

(1) The endurance tests prescribed by §§ 27.923 and 27.927 require achieving certain speeds, power, and control displacement for the auxiliary (tail) rotor as well as the main rotor. The parts must be serviceable at the conclusion of the tests.

(2) Structural substantiation of the auxiliary (tail) rotor is required to ensure integrity for the minimum and maximum design rotor speeds and the maximum design rotor thrust in the positive and negative direction. Thrust capability of the rotor should offset the main rotor torque at maximum power as required by § 27.927(b).

(i) The maximum and minimum operating rotor speed, power-off, is 95 percent of the maximum design speed and 105 percent of the minimum design speed, respectively.

(ii) The rotor operating speed limits shown during the official FAA/AUTHORITY flight tests must include the noted 5 percent margin with respect to the design speeds.

(iii) The auxiliary rotor generally has a positive and negative pitch limit that ensures adequate directional control throughout the operating range of the rotorcraft. The power-off rotor speed limits are generally broader than the power-on rotor speed limits because of the required autorotational rotor speed characteristics. Thus, the auxiliary rotor design conditions concern the maximum and minimum design rotor speeds in conjunction with the maximum positive or negative pitch thrust, as appropriate. Thrust capability and precone angle of the rotor, if any, will significantly influence the rotor design loads. The variations in rotor design features and an example of substantiation would be too lengthy to include here. However, ANC-9, “Aircraft Propeller Handbook” contains principles that may be applied to tail rotor designs. Tail rotors may be considered a special propeller design.

(iv) Bearings are generally used in the tail rotor installation to allow flapping and feathering motion of the blades. The bearing manufacturer’s ratings of these bearings must not be exceeded. Bearings generally used in main and tail rotors are classified as ABEC Class 3, 5, or 7. Class 7 is the highest quality presently available. Satisfactory completion of the endurance tests of §§ 27.923 and 27.927 is a means of proving that use of a particular bearing is satisfactory.

(v) The analysis must include appropriate special factors, casting factors, bearing factors, and fitting factors prescribed by §§ 27.619, 27.621, 27.623, and 27.625, respectively. The fitting factor of 1.15 must be applied in the analysis of the tail rotor installation.

AC 27.401A. § 27.401 (Amendment 27-27) AUXILIARY ROTOR ASSEMBLIES.

a. Explanation. Amendment 27-27 removed this section since the requirements are adequately addressed in §§ 27.337, 27.339, and 27.341.

b. Procedures. The policy material pertaining to this section is retained as supplemental information.

AC 27.403. § 27.403 AUXILIARY ROTOR ATTACHMENT STRUCTURE.

a. Explanation.

(1) The auxiliary rotor attachment structure(s), which is considered to include gearboxes, must be designed to withstand design limit loads that occur in flight and on landing. These design loads that generally consist of the following must be established for the particular flight and landing condition under consideration.

(i) Inertia loads generated by linear and angular accelerations of the auxiliary rotors and their gearboxes, combined with--

(ii) Thrust and torque loads developed by the auxiliary rotors.

The linear and angular acceleration loads imposed by the weight of the tail rotor and gearbox are generally derived from airframe loads data. Thrust and torque output of the tail rotor are derived during external aerodynamic and landing loads development for pertinent flight and landing conditions.

(2) General rules related to proof of structure loads and factor of safety are §§ 27.307, 27.301, 27.303, and 27.305.

b. Procedures.

(1) The angular and linear acceleration loads combined with appropriate tail rotor thrust and torque for the critical conditions shall be imposed on the tail rotor gearbox mount lugs, the airframe mounting structure, and the attaching hardware.

(2) The yaw and maximum power climb conditions are generally critical. Landing and maneuvering conditions with and without power may also impose high inertia and rotor thrust and torque loads on the attachment structure.

(3) The derivation of the loads and conditions is too extensive to include here. Additional information can be found in the U.S. Army Material Command Report AMCP 706-201, “Engineering Design Handbook: Helicopter Engineering, Part One, Preliminary Design.”

AC 27.403A. § 27.403 (Amendment 27-27) AUXILIARY ROTOR ATTACHMENT STRUCTURE.

a. Explanation. Amendment 27-27 removed this section since the requirements are adequately addressed in §§ 27.337, 27.339, 27.341.

b. Procedures. The policy material pertaining to this section is retained as supplemental information.

AC 27.411. § 27.411 GROUND CLEARANCE: TAIL ROTOR GUARD.

a. Explanation.

(1) The rule requires specific protection to prevent the tail rotor from contacting the landing surface during a normal landing if it is possible that the tail rotor will contact the surface. The rule states that it must be impossible for the tail rotor to contact the surface during a normal landing.

(2) If a guard is required, the guard and its supporting structure must withstand suitable design loads.

(3) Section 27.501(c)(1) contains skid landing gear drag requirements that may be applied to the guard design loads.

b. Procedures.

(1) The applicant may submit sketches or drawings showing probable clearance with typical level landing surfaces during normal landings. Typical attitudes such as nose-high autorotation, or autorotation with power-on landing, or other possible tail-low attitudes should be investigated. If the drawings or sketches reveal that it is not likely the tail rotor will contact the landing surface, this minimum clearance with the landing surface may be confirmed during official FAA/AUTHORITY flight tests, such as HV and landing tests. The clearance may be confirmed by having a frangible device of suitable length (i.e., a balsa wood dowel) extending beyond the guard and attached to the tail rotor guard or other appropriate fuselage part. If the device is not damaged, broken, or no contact is made with the surface, compliance has been demonstrated.

(2) If it is possible for the tail rotor guard to contact the landing surface, suitable design loads must be established for the guard. ANC-2a dated March 1948, “ANC Bulletin Ground Loads,” paragraph 6.4, entitled “Tail Bumper Criteria,” is an acceptable

means of deriving the rotorcraft kinetic energy that shall be absorbed by the guard. This method is noted here for convenience.

(i) The tail rotor guard shall be able to absorb the kinetic energy of the rotorcraft in its most unfavorable CG position in the tail-down landing attitude. The kinetic energy that the tail rotor guard should be capable of absorbing may be determined by the following:

$$KE = \frac{WV_S^2}{2g} \times \frac{K_Y^2}{(K_Y^2 + 1_B^2)}$$

where-- V_S = vertical speed ft/sec, derived from § 27.725(a)
K_Y = pitching radius of gyration - ft from pitching axis
1_B = distance from most critical CG location to the guard or bumper contact point - ft
W = gross weight less rotor lift from § 27.473(a) - lbs
g = 32.2 ft/sec^2

(ii) Other, more recent, analytical techniques (most utilizing computer programs) may, of course, be used rather than the ANC-2a means after proper substantiation for applicability and validity.

(iii) The tail rotor guard should not fail when the limit and ultimate load, which is derived from a combination of the limit kinetic energy and the guard resulting limit deflection required to dissipate the energy, is imposed on the guard and the rotorcraft tail (see § 27.305).

(3) Substantiation of the guard, skid, or bumper for the design loads derived may be accomplished by test or analysis as stated in § 27.307(a).

(4) Several rotorcraft tail rotor guards are installed solely for the protection of ground personnel from the rotating tail rotor. For guards installed for this purpose, the applicant should use prudent and reasonable design loads and features. Such guards should not present a hazard to the rotorcraft because of its design features.

AC 27.413. <u>§ 27.413 STABILIZING AND CONTROL SURFACES</u>.

a. <u>Explanation</u>. Minimum design loads are specified for stabilizing as well as control surfaces.

(1) Paragraph (a) of the rule requires application of minimum empirical design loads, application of critical maneuvering loads, and application of critical maneuvering loads combined with vertical gust loads (30 feet per second or 17.8 knots per § 27.341).

(2) Paragraph (b) requires load distributions that closely simulate actual pressure distributions. Both spanwise and chordwise distributions are intended.

(3) These surfaces are used for stability and control thereby hopefully extending the CG range and increasing the airspeed of modern designs.

(4) To “closely simulate actual pressure condition” on the surfaces, unsymmetrical loads are also required on horizontal surfaces. An arbitrary distribution, if conservative, may be used.

(5) It is noted § 27.571 requires fatigue substantiation of the flight structure which will include control and stabilizing surfaces.

(6) If the surface is controllable, a proof and operation test of the surface control system is required by §§ 27.681 and 27.683.

b. Procedures. Modern rotorcraft designs have generally employed a fixed or a wholly movable, not split or divided, stabilizing or control surface.

(1) Design Loads.

(i) Limit loads of 15 pounds per square foot will apply up to approximately a 90-knot design airspeed. Above a 90-knot design airspeed ($1.11V_{NE}$), the coefficient ($C_N = 0.55$) imposes higher limit loads on the surface. The coefficient C_N is assumed normal to the chordline of the section.

(ii) In addition, combined maneuvering and vertical up or down gust loads may impose the highest limit loads on the control surfaces of rotorcraft. This is attributed to the change in angle of attack and change in resultant airspeed.

(iii) The applicant may choose to derive the limit loads using maximum aerodynamic coefficients for the surface under consideration at the maximum design airspeed combined with a 17.8-knot gust. This would be acceptable provided these design loads exceed the minimum loads derived from a $C_N = 0.55$ at design airspeed or exceed 15 pounds per square foot load on the surface.

(2) The load distribution on the surface should closely simulate actual pressure distributions.

(i) The spanwise load may be rectangular, or other acceptable conservative distributions may be used. The method developed by O. Schrenk in NACA TM 948, 1940, is an acceptable method for approximation of spanwise distribution.

NOTE: The method is valid for aspect ratios of 5 through 12 and for rectangular planforms such as used on rotorcraft, other planforms may be acceptable as prescribed in the TM.

(ii) The chordwise distribution appropriate for the aerodynamic shape or a conservative distribution should be used.

(iii) The flight load survey conducted under § 27.571 may be used to confirm design parameters and possible load distribution data. On controllable surfaces, the pitching moment (control loads) may be measured for fatigue substantiation of the control system. The control stabilizing surfaces may be subject to loads measurement and possible fatigue tests for fatigue substantiation also.

(3) Proof of the structure for the required loads is specified in §§ 27.301, 27.303, 27.305, and 27.307. Tests or analysis may be used as prescribed. If analysis is used, fitting factors and other appropriate factors prescribed by the rules of §§ 27.625, 27.621, and 27.623 will be required in the analysis.

AC 27.413A. § 27.413 (Amendment 27-27) STABILIZING AND CONTROL SURFACES.

a. Explanation. Amendment 27-27 removed this section since the requirements are adequately addressed in §§ 27.337, 27.339, and 27.341.

b. Procedures. The policy material pertaining to this section is retained as supplemental information especially as reference material for paragraph AC 27.341 (§ 27.341).

AC 27.427. § 27.427 (Amendment 27-27) UNSYMMETRICAL LOADS.

a. Explanation. Amendment 27-26 added the standard and Amendment 27-27 amended it. Minimum unsymmetrical design loads are specified for horizontal tail surfaces and also vertical tail surfaces whenever they support the horizontal tail surfaces.

(1) Loads are derived by rational analysis, or for earlier certification bases, the prescribed empirical loads of § 27.413 may be used. Section 27.413 was removed by Amendment 27-27 since the requirements are adequately addressed in §§ 27.337, 27.339, and 27.341.

(2) Rational loads, appropriate for the aerodynamic surfaces, should be distributed according to the standard.

(3) When vertical tail surfaces support the horizontal tail surfaces, the vertical tail surfaces and supporting surfaces are required to support the critical combination of vertical and horizontal surface loads.

b. Procedures. Two basic loading conditions are required by § 27.427 for each of the two basic empennage configurations.

(1) Horizontal surfaces supported by the tail boom or fuselage. Structural substantiation should be provided for all six combinations shown in figure AC 27.427-1. All of these empirical loading distributions should be used unless rational analysis shows one or more of each set of conditions to be non-critical or equal or more realistic distributions are substantiated. Rectangular spanwise air load distribution should be used unless more rational distribution is substantiated. If end plates are used, the air loads should be distributed accordingly.

(i) First unsymmetrical loading condition:

(A) 100 percent of the flight load is applied to one side of the plane of symmetry; and 0 percent of the flight load is applied to the other side of the plane of symmetry.

(B) For surfaces with end plates or other similar devices, the load distribution will be changed accordingly.

(ii) Second unsymmetrical loading condition:

50 percent of the flight load is applied to one side of the plane of symmetry acting up; and 50 percent of the flight load is applied to the other side of the plane of symmetry acting down.

(2) Horizontal surfaces supported by a vertical surface. Structural substantiation should be provided for all six combinations shown in figure AC 27.427-2. All of these empirical loading distributions should be used unless rational analysis shows one or more of each set of conditions to be non-critical or equal or more realistic distributions are substantiated. Rectangular spanwise air load distribution should be used unless more rational distribution is substantiated. If end plates are used, the air loads should be distributed accordingly.

(i) First unsymmetrical loading condition:

100 percent of the flight load is applied to one side of the plane of symmetry; and 0 percent of the flight load is applied to the other side of the plane of symmetry.

(ii) Second unsymmetrical loading condition:

50 percent of the flight load is applied to one side of the plane of symmetry acting up; and 50 percent of the flight load is applied to the other side of the plane of symmetry acting down.

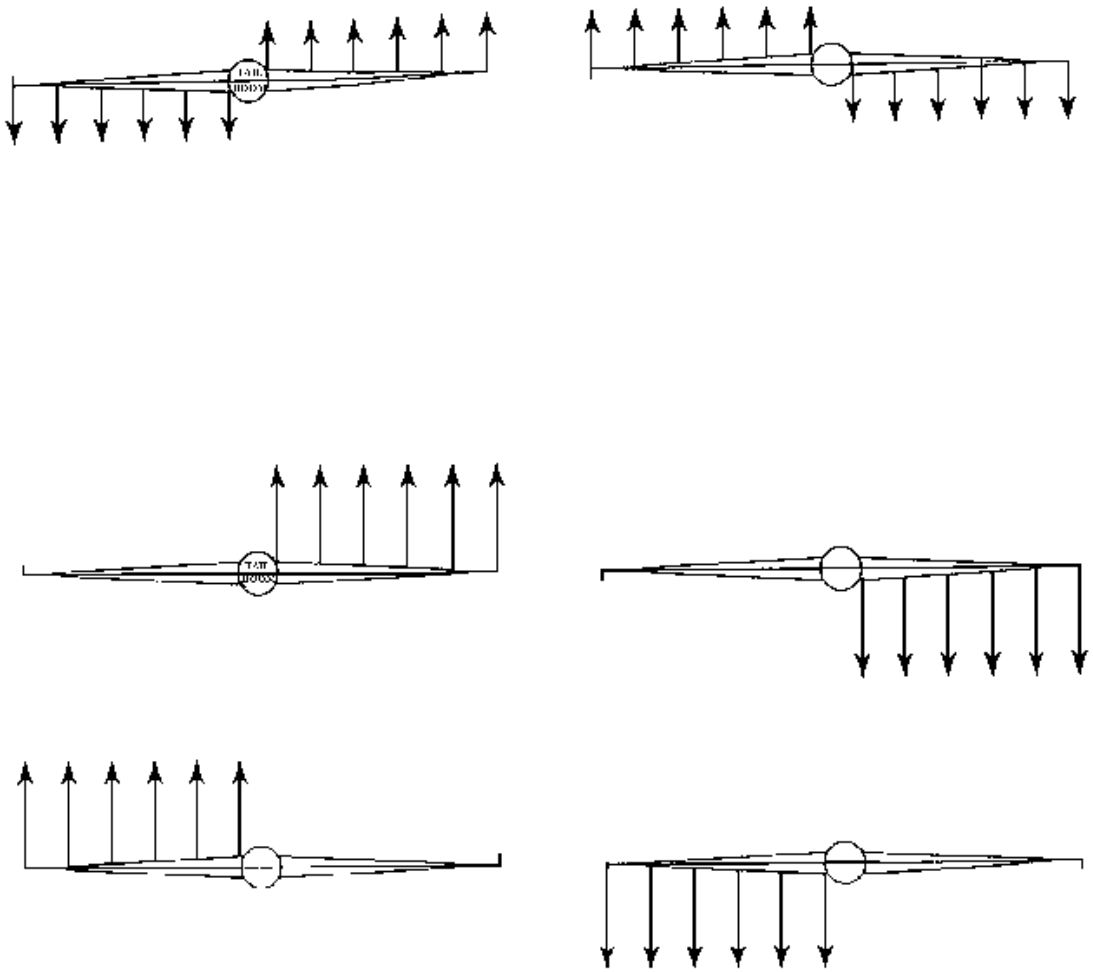

Figure AC 27.427-1 (View Looking Forward)

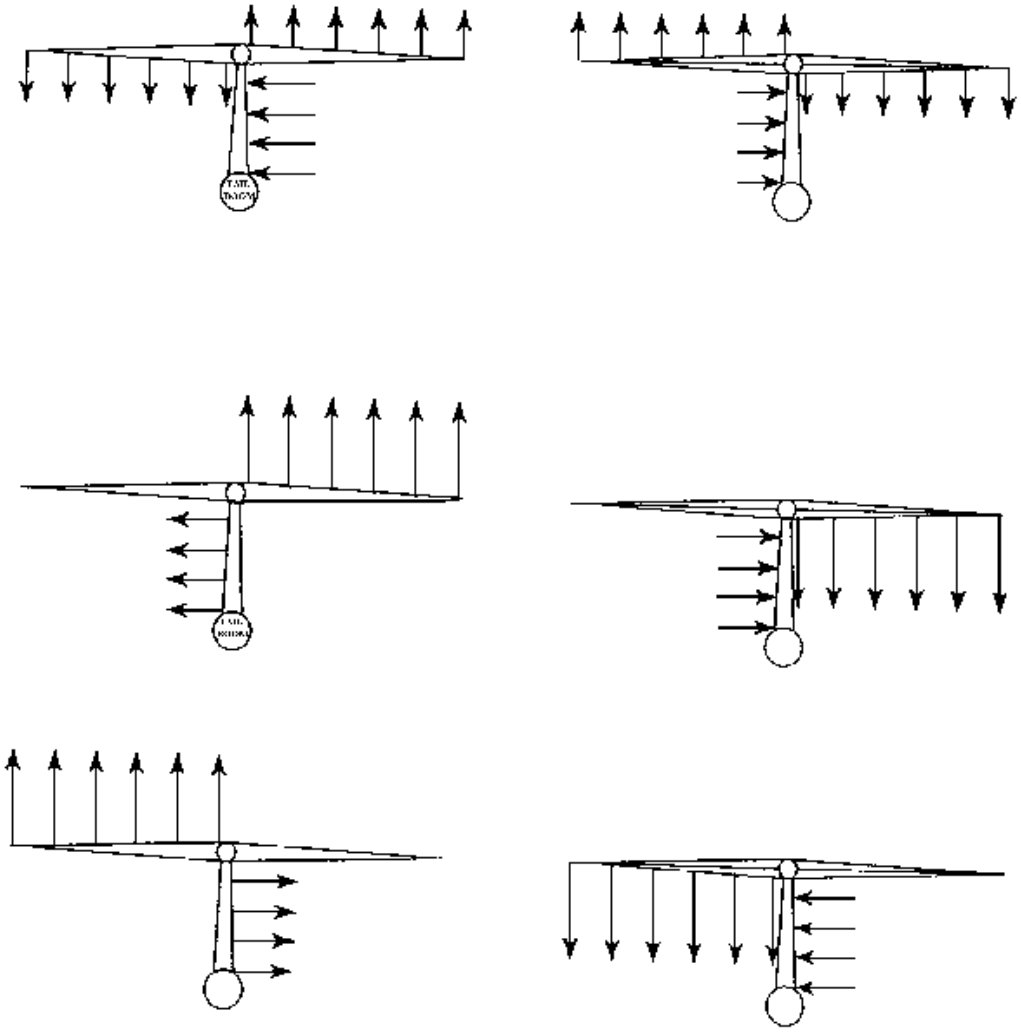

Figure AC 27.427-2 (View Looking Forward)

SUBPART C - STRENGTH REQUIREMENTS

GROUND LOADS

AC 27.471 § 27.471 GROUND LOADS--GENERAL.

a. Explanation. This regulation specifies that limit ground loads must be considered which are:

(1) External loads caused by landing (ground) conditions for skid and wheel landing gear equipped rotorcraft and by ground taxiing loads as specified in § 27.235 for wheel landing gear equipped rotorcraft.

(2) Loads considering the rotorcraft structure as a rigid body.

(3) Loads in equilibrium with linear and angular inertia loads.

(4) The critical center of gravity "must be selected so that the maximum design loads are obtained in each landing gear element."

b. Procedures.

(1) The standards to be considered are specified in §§ 27.473 through 27.505. These associated standards cover landing gear arrangements, landing conditions, and ground loading conditions (for wheel landing gear rotorcraft).

(2) Drop tests may be used to verify landing load factors. (See paragraph AC 27.725.)

(3) The application of the design loads derived from the landing load factors will be as specified for each element affected by landing or ground loading conditions (for wheel landing gear rotorcraft).

(4) During the applicant's flight test program, the landing load factors for skid and wheel landing gear rotorcraft and taxiing load factors for wheel landing gear rotorcraft are monitored to assure the design load factors used are adequate. See paragraph AC 27.235 of this document for § 27.235 policy.

AC 27.473 § 27.473 (Amendment 27-2) GROUND LOADING CONDITIONS AND ASSUMPTIONS.

a. Explanation. The rotorcraft is to be designed for the maximum weight. A rotor lift of two-thirds of the design maximum weight may be used. The minimum limit landing load factor is determined by the drop tests of § 27.725.

b. Procedures. Loads for the landing conditions are derived considering mass (equal to the maximum weight) and rotor lift (equal to two-thirds of the maximum weight) acting through the center of gravity throughout the landing impact. Unbalanced external loads resulting from asymmetric loading conditions are reacted as specified in the individual subparagraphs. The rotorcraft must be substantiated for ultimate landing loads by either test or analysis utilizing an ultimate load factor of 1.5 applied to the limit load factor of not less than that substantiated under § 27.725.

AC 27.475 § 27.475 TIRES AND SHOCK ABSORBERS.

a. Explanation. This section specifies the tire and shock absorber position to be used in ground load derivations.

b. Procedures. Ground loads are to be derived with the tires in static (1g) position and the shock absorbers "in their most critical position." The determination of the "most critical position" for the shock absorbers generally requires a load versus deflection test or analysis of the shock absorber system and a determination of the effect of both load and deflections on the shock absorber, attachment structure, and substructure designed by ground loads.

AC 27.477 § 27.477 LANDING GEAR ARRANGEMENT.

a. Explanation. This section specifies the individual standards to be used for ground load conditions for rotorcraft having two wheels aft and one or more wheels forward of the center of gravity.

NOTE: Section 27.497 gives ground loading conditions for landing gear with tail wheels, and § 27.501 gives ground loading conditions for landing gear with skids.

b. Procedures. The ground loading conditions of §§ 27.235, 27.479 through 27.485, and 27.493 will be used for rotorcraft having two wheels aft and one or more wheels forward of the center of gravity. This includes forward wheels on separate axles.

AC 27.479 § 27.479 LEVEL LANDING CONDITIONS.

a. Explanation. This section provides explicit level landing load criteria for landing gear with two wheels aft and one or more wheels forward of the center of gravity.

(1) Level landings--

(i) Each wheel contacting the ground simultaneously; and

(ii) Aft wheels contacting the ground with forward wheels just clear of the ground.

(2) Application of loads--

(i) Maximum design vertical loads applied alone; and

(ii) The maximum design vertical loads applied with a drag load of at least 25 percent of the vertical load (applied at the ground contact area).

(3) A 40 percent/60 percent load distribution between wheels for configurations having two forward wheels including quadricycle. This distribution between wheels on a common axis is to be applied for the conditions of vertical loads only and for vertical loads combined with drag loads of 25 percent of the vertical loads.

(4) Aircraft pitching moments are to be reacted by the forward landing gear for simultaneous wheel contact or by the angular inertia forces when the forward landing gear is clear of the ground as specified.

b. Procedures.

(1) The specified loading conditions will be used in load derivations.

(2) The critical center of gravity condition will be used for each gear and gear support structure.

(i) The aft center of gravity condition with the forward gear clear will normally be critical for the aft gear and gear supports.

(ii) The forward center of gravity condition with each gear contacting the ground simultaneously will normally design forward gear elements critical for vertical loads.

(iii) The forward center of gravity condition with the forward gear clear may result in high load factors, angular plus linear, that will greatly affect security of items of significant mass.

AC 27.481 § 27.481 TAIL-DOWN LANDING CONDITIONS.

a. Explanation. This section provides the criteria for tail-down landing conditions; i.e., “the maximum nose-up attitude allowing ground clearance” with ground loads acting “perpendicular to the ground.”

b. Procedures.

(1) The tail-down landing condition will be used to check (by analysis or test) for criticality of landing gear or support structure. This attitude generally creates the highest forward loads on the main landing gear in combination with vertical loads.

(2) The tail-down landing condition may be the critical condition for both landing load factor and for energy absorption by the main gear. Section 27.725 requires that "each landing gear must be tested in the attitude simulating the landing condition that is most critical." Where questions exist as to the critical attitude, both level landing and tail-down landing attitudes should be used in drop tests required by § 27.725.

AC 27.483 § 27.483 ONE-WHEEL LANDING CONDITIONS.

a. Explanation. This section gives the condition to be used for one-wheel landing conditions. Only the vertical load condition of § 27.479(b)(1) is required.

b. Procedures. The one-wheel landing condition is generally critical for the landing gear-to-fuselage attachments and the landing gear elements between the attachments. Unbalanced external loads are reacted by rotorcraft inertia.

AC 27.485 § 27.485 LATERAL DRIFT LANDING CONDITIONS.

a. Explanation.

(1) This section provides the loading conditions which impose side (and vertical) loads on the landing gear. A level landing attitude is specified. Two main conditions required are--

(i) Only the aft wheels in contact with the ground; and

(ii) All wheels contacting the ground simultaneously.

(2) Loads. The vertical loads to be applied with the side loads are specified as "one-half of the maximum ground reactions of § 27.479(b)(1)." These vertical loads are the level landing loads considering both contact and noncontact with the ground by the forward wheels.

(i) One side load condition is specified as "0.8 times the vertical reaction acting inward on one side and 0.6 times the vertical reaction acting outward on the other side" when only the aft wheels contact the ground.

(ii) The other side load condition (for all wheels contacting the ground) specifies the 80 percent inward/60 percent outward distribution for the aft wheels and 0.8 times (80 percent) the vertical reaction for the forward wheels.

b. Procedures. The loading conditions, as specified, are applied to the landing gear and attaching structure. The loads are applied at the ground contact point, except for full swiveling gear which has the load applied at the center of the axle. In other words, full swiveling gear is considered to have swiveled to a static position under the side load before the design vertical and side loads are achieved. The rotorcraft as well as the landing gear itself will be substantiated for these side load conditions.

AC 27.493 § 27.493 BRAKED ROLL CONDITIONS.

a. Explanation. This section provides two loading conditions for ground braking operations. Specific vertical loads in conjunction with drag loads (due to braking) are to be considered. The limit vertical load factor is 1.33 for condition of all wheels in contact with the ground and 1.0 for condition of aft wheels only in contact with the ground and nose wheel clear. The drag load on wheels with brakes is 0.8 times the vertical load or the drag load value based on limiting brake torque, whichever is less. The drag load value for limiting brake torque may be that determined in the performance testing to TSO C26 or equivalent, as required.

b. Procedures. The braking loads are calculated from the specified criteria with the shock absorbers in their static (normal) positions and with the drag loads applied at the ground contact point. Structural substantiation of the affected structure may be accomplished by test or analysis. If tests are used, the wheel and tire assembly is commonly replaced with a test fixture so the limit loads and static deflections specified can be more accurately controlled. The test specimen should be complete enough to ensure that the landing gear structure and the attach and backup structure are adequately substantiated.

AC 27.497 § 27.497 GROUND LOADING CONDITIONS: LANDING GEAR WITH TAIL WHEELS.

a. Explanation. This section provides the loading conditions for landing gear designs with tail wheels.

(1) Level landings are to consider the following:

(i) All wheels (main and tail) contacting the ground simultaneously, as well as only forward main wheels contacting the ground.

(ii) Maximum design vertical loads applied alone.

(iii) The maximum design vertical loads combined with a drag load of at least 25 percent of the vertical loads for both conditions.

(2) Nose-up landings with only the rear wheel or wheels initially contacting the ground must be considered unless shown to be extremely remote.

(3) Level landings on one forward wheel only are to be considered. Drag loads are not required.

(4) Side load conditions are imposed on the main wheels and tail wheels for level landing attitudes. Criteria for full swiveling and locked tail wheels are included in this standard.

(5) Braked roll conditions are specified for the level landing attitudes.

(6) Rear wheel turning loads are also specified for swiveling and locked tail wheels.

(7) Taxiway condition loads for the landing gear and rotorcraft are those that "occur when the rotorcraft is taxied over the roughest ground that may reasonably be expected in normal operation." The aircraft design load factors should not be exceeded during the evaluation. Section 27.235 contains an identical standard that applies to all types of wheel landing gear.

b. Procedures.

(1) The specified loading conditions are to be used in load derivations.

(2) The critical center of gravity condition is used for each gear and gear support structure.

(i) The forward center of gravity condition with the tail gear clear will normally be critical for the forward gear and gear supports.

(ii) The aft center of gravity condition with the tail gear clear should be checked for criticality of security of large mass items located forward of the center of gravity. Vertical and angular accelerations are additive under this landing condition.

(iii) The aft center of gravity condition with each gear contacting the ground simultaneously will generally design tail gear elements critical for vertical loads. The other conditions are generally less severe but must be proven.

(3) For tail-down landing procedures use § 27.481. The reference to "extremely remote" in § 29.497(d)(2) predates current §§ 25.1309, 29.1309, and AC 25.1309.1. This phrase has been used to require consideration of nose-up landings unless features of design are present which prevent nose-up landings or where such landings are unlikely during the life of the rotorcraft. (See paragraph AC 27.481.)

(4) Use § 27.483 for one-wheel landing procedures, paragraph AC 27.483.

(5) Use § 27.485 procedures for side load conditions, paragraph AC 27.485.

(6) Use § 27.493 procedures for braked roll conditions, paragraph AC 27.493.

(7) For rear wheel turning loads, swiveling of tail landing gears is allowed as in basic side load conditions. The side load is applied at the axle or, if the wheel is locked, the load is applied at ground contact. Rear wheels are loaded with the critical vertical static load in conjunction with an equal side load to substantiate the tail gear.

(8) Since the rotorcraft is to be designed for load factors that will not be exceeded during taxi tests or other conditions, an instrumented taxi test program will be necessary. (Use § 27.235, paragraph AC 27.235.)

AC 27.501 § 27.501 (Amendment 27-2) GROUND LOADING CONDITIONS: LANDING GEAR WITH SKIDS.

a. Explanation. This section provides the ground loading conditions for landing gear with skids. The loading conditions are similar to those for wheeled gear except for the following criteria which are unique to skid gears:

(1) Structural yielding of elastic spring members under limit loads is allowed.

(2) Design ultimate loads for elastic spring members need not exceed the loads obtained in a drop test with a drop height of 1.5 times the limit drop height. The rotorcraft and the landing gear attachments are subject to the prescribed design ultimate loads.

(3) The gear must be in its most critically deflected position (similar to § 27.475).

(4) Ground reactions are rationally distributed along the bottom of the skid unless otherwise specified. Section 27.501(f) concerns specific “concentrated” and arbitrary load conditions.

(5) Drag loads are 50 percent of vertical reactions rather than the 25 percent for wheeled gear.

(6) Side loads are 25 percent of the total vertical reaction rather than the 60 to 80 percent for wheeled gear.

(7) Side loads are applied to one skid only (inward acting and outward acting) with resulting unbalanced moment resisted by angular acceleration.

(8) A ground reaction load of 1.33 times the maximum weight is to be applied at 45° from the horizontal axis:

(i) Distributed among or between the skids;

(ii) Concentrated at the forward end of the straight portion of the skid tube; and

(iii) Applied only to the forward end of the skid tube and its attachment to the rotorcraft.

(9) A concentrated vertical load equal to one-half of the design limit vertical load is to be applied at a point midway between the skid tube attachments. This condition applies only to the skid tube and its attachment to the rotorcraft.

b. Procedures.

(1) The specified loading conditions are to be used in load derivations.

(2) The critical center of gravity conditions are to be used for each gear and gear support structure. Asymmetry of the skid tubes, cross tubes, and gear attachments is to be considered in determining the critical center of gravity condition.

(3) The rotorcraft and landing gear attachment must be substantiated for ultimate landing loads by either test or analysis utilizing an ultimate load factor of 1.5 in accordance with § 27.303. The elastic spring members may be analyzed or static tested for ultimate loads (and deflections) using either a factor of safety of 1.5 or one associated with an “ultimate” drop height of 1.5 times the limit drop height. Substantiation by “ultimate” drop tests may be used provided all combinations of critical parameters are included in the total substantiation effort. This method will require a series of tests using several test specimens or a limited number of drop tests plus further substantiations by static tests or analyses for additional critical conditions not covered by the drop test(s).

AC 27.501A § 27.501 (Amendment 27-26) GROUND LOADING CONDITIONS: LANDING GEAR WITH SKIDS.

a. Explanation. Amendment 27-26 relaxes the previous requirements in two cases by:

(1) Allowing the total sideload of § 27.501(d)(3) to be distributed “equally between skids” rather than being “applied along the length of one skid only;” and,

(2) Allowing the concentrated load of § 27.501(f)(2)(ii) to be distributed over the central 33.3 percent of the skid (between skid tube attachments) rather than being “concentrated at a point midway between the skid tube attachments.”

b. Procedures. The previous procedures (through Amendment 27-19) continue to apply to Amendment 27-26 except use the new load distributions.

AC 27.505 § 27.505 SKI LANDING CONDITIONS.

a. Explanation. This is an optional requirement for ski operations. The regulation specifies vertical loads, side loads, and torque loads (M_Z) to be applied to ski installations. The four loading conditions to be applied at the pedestal bearings are:

(1) Simultaneous application of Pn, up load, and Pn/4, horizontal load.

(2) Up load of 1.33 P.

(3) Side load of 0.35 Pn.

(4) Torque load of 1.33 P (in foot-pounds) about the vertical axis through the centerline of the pedestal bearings.

NOTE: Where P is the maximum static weight on each ski and n is the limit load factor obtained from drop tests. The load factor obtained from wheel or skid landing gear drop tests may be used.

b. Procedures. Structural substantiation may be accomplished by static test or analysis using the specified loads. Skis generally have a limit load rating. The design loads derived for this standard must not exceed the rating. (TSO-C28 concerns, in part, standards for aircraft skis.)

SUBPART C - STRENGTH REQUIREMENTS

WATER LOADS

AC 27.521 § 27.521 FLOAT LANDING CONDITIONS.

a. Explanation. This is an optional requirement for float operations. The regulation specifies vertical loads, aft loads, and side loads to be applied to the float installations. The two loading conditions to be applied are:

(1) Up-load Condition.

(i) A vertical load appropriate to a landing load factor determined under § 27.473(b).

(ii) A resultant water reaction passes vertically through the aircraft CG.

(iii) An aft load equal to 25 percent of the vertical load.

(2) Side-load Condition.

(i) A vertical load equal to 75 percent of the vertical load for the up-load condition, equally divided among the floats.

(ii) A side load at each float equal to 25 percent of the vertical load specified for the side load condition.

b. Procedures.

(1) The vertical load factor is determined by drop tests in accordance with §§ 27.473(b) and 27.725. The floats may be drop tested, or they may be assumed to have the same load factor as wheeled gear which have been drop tested.

(2) Structural substantiation may be accomplished by either static tests or analysis using the specified loads. The load distribution on the floats may be realistic, based on hydrostatic pressure distributions, or conservative.

SUBPART C - STRENGTH REQUIREMENTS

MAIN COMPONENT REQUIREMENTS

AC 27.547 § 27.547 (Amendment 27-3) MAIN ROTOR STRUCTURE.

a. Explanation. This regulation requires the main rotor structure to be designed to the static load requirements of §§ 27.337 through 27.341 (vertical maneuvering loads and vertical and horizontal gust loads). In addition, the main rotor blades, hubs, and flapping hinges are specified to be designed for impact forces of each blade against its stop during ground operation and for specified limit torque at any rotational speed including zero. The torque forces (from the drive system) are distributed to the rotor blades as specified.

b. Procedures.

(1) Substantiation in compliance with this standard is accomplished by application of the flight loads of §§ 27.337 through 27.341 and the torque loads of § 27.361 to the rotor structure by stress analyses and/or static tests. The use of wind tunnel data as well as flight loads survey data may be used to generate and/or check the external load magnitudes and distributions.

(2) Where new materials are used in the main rotor structure, such as composites containing plastics, the effects of temperature and humidity are to be considered in accordance with § 27.603, and the effects of uncertainties in manufacturing processes or inspection methods are to be considered in accordance with § 27.619. More experience is available for metallic materials, but § 27.603 requires that metallics be suitably protected against the effects of environmental conditions.

(3) The design impact forces of each blade must be imposed against its stop or stops. Appropriate monitoring of the blades, hubs, flapping hinges, and stops during laboratory tests, ground endurance tests, and flight tests should ensure that the stops are sufficient for ground operation loads. The design torque loads are derived as prescribed.

AC 27.549 § 27.549 (Amendment 27-3) FUSELAGE, LANDING GEAR, AND ROTOR PYLON STRUCTURE.

a. Explanation. This regulation requires that the fuselage, landing gear, and rotor pylon (including the tail fin, if any) be designed to withstand the flight loads of §§ 27.337 through 27.351, the ground loads of §§ 27.235, 27.471 through 27.497, skid loads of § 27.501, ski loads of § 27.505, water loads of § 27.521, and rotor loads of § 27.547(d) and (e). The ski and water loads pertain to optional features. Consideration is also required of --

(1) Auxiliary rotor thrust;

(2) The torque reaction of each rotor drive system; and

(3) Balancing air and inertia loads.

b. Procedures. Compliance with this standard is accomplished by application of the specified aircraft loads including engine torque to the fuselage and rotor pylon structure by stress analyses and/or static tests. Drive system torque factors to be used are noted in § 27.547(e) for the main rotor structure.

SUBPART C - STRENGTH REQUIREMENTS

EMERGENCY LANDING CONDITIONS

AC 27.561 EMERGENCY LANDING CONDITIONS--GENERAL.

a. Explanation.

(1) Occupant protection. The occupants should be protected as prescribed from serious injury during an emergency/minor crash landing on water or land for the conditions prescribed in the standard. The standard states that each occupant should be given every reasonable chance of escaping serious injury in a minor crash landing. In addition, the occupants shall be protected from items of mass inside the cabin as well as outside the cabin. For example, a cabin fire extinguisher must be restrained for the load factors prescribed in this section (reference § 27.1411(b)(2).) A transmission or engine must be restrained to the load factors in § 27.561(b)(3) if located above or behind the occupants.

(2) Load factor determination. The standard in § 27.561(b)(3) specifies certain ultimate inertia load factors but allows a lesser downward vertical load factor by virtue of a 5 FPS ultimate rate of descent.

(3) Retractable landing gear. For rotorcraft equipped with retractable landing gear only the retracted configuration must be considered.

(4) Door and exit protection. The minor crash conditions contained in § 27.561(b)(3) should also be considered in designing doors and exits (§ 27.807(b)(4)).

(5) External load considerations. The load factors of § 27.561 and the criteria of § 27.562 are not directly applicable to external load systems. This is because in emergency crash scenarios that involve external loads, the external load is neither typically subjected to the same minor crash loads (§ 27.561) as is the rotorcraft hull and its internal occupants nor are all of the occupant protection criteria (§ 27.562) needed or practicable to apply. Appropriate safety for external load carriage systems is provided by the criteria of § 27.865. Safety standards for external load attaching means are provided in § 27.865.

b. Procedures.

(1) The design criteria report or another similar report of the rotorcraft structural limits should contain the (ultimate) minor crash condition load factors.

(2) Section 27.785 (paragraph AC 27.785) concerns application of this design standard to seats, berths, belts, and harnesses.

(3) The ultimate design landing and maneuvering load factors may exceed the minor crash condition load factors. The highest load factor derived shall be used.

(i) For example, for light weight conditions, the ultimate maneuvering load factor may be 5.25g as specified in § 27.337.

(ii) The ultimate vertical landing load factors derived from §§ 27.471 through 27.521, whichever is appropriate for the design, may exceed the 4.0g down load factor in this section. The rotorcraft landing case design limit contact velocity shall range from 6.5 to 8.3 FPS (see §§ 27.473 and 27.725).

(4) As specified in (b)(3)(iv) of the standard, the downward load factor is 4.0 or a lower design load factor may be used.

(i) The lower load factor relates to a rotorcraft impacting a flat, hard landing surface at 5 FPS (ultimate) vertical rate of descent. The load factor derived for each unique design is a function of the aircraft impact/crushing characteristics.

(ii) The 4.0g down load factor case is related to either a fixed or retractable gear rotorcraft. This condition is not dependent on impact characteristics of the rotorcraft.

(iii) As noted in paragraph b(3) above, the design landing load factors may exceed each of the two previous cases and would then become the prominent design (vertical load) parameter for seats, transmissions, fire extinguishers, etc.

(5) Items of mass such as fire extinguishers, nav-com equipment, life rafts, engines, and/or transmissions shall be restrained for the appropriate load factors.

(6) Cargo/baggage compartments separated from the passenger compartment shall be designed for load factors specified in § 27.787. The conditions in § 27.561 are excepted from that standard.

AC 27.561A. <u>§ 27.561 (Amendment 27-25) EMERGENCY LANDING CONDITIONS -GENERAL</u>.

a. <u>Explanation</u>. Amendment 27-25 adds or increases the design static load factor of § 27.561 in two areas. The addition of these load factors eliminates the 5 FPS ultimate descent velocity criteria of unamended § 27.561(b)(3).

(1) The design static load factors for the cabin in § 27.561(b)(3) are increased in concert with the dynamic test requirements of new § 27.562.

(2) Design static load factors are added in § 27.561(c) for external items of mass located above and/or behind the crew and passenger compartment.

b. Procedures. The procedures of paragraph AC 27.561 continue to apply except the new load factors of § 27.561 should be used. Penetration of any items of mass into the cabin or occupied areas should be prevented.

AC 27.561B. § 27.561 (Amendment 27-30) EMERGENCY LANDING CONDITIONS - GENERAL.

a. Explanation.

(1) Amendment 27-30 adds paragraph (d) which lists specific load factors for the fuselage structure in the area of internal fuel tanks located below the passenger floor level. For other locations, the fuselage structure is to be designed to resist crash impact loads prescribed in § 27.561(b)(3) for fuel tanks located within the cabin area; or § 27.561(c) for fuel tanks located behind or above the occupant area. These load factors are provided to prevent crash induced fuel tank ballistic hazards to occupants and to also protect the fuel tank from rupture as prescribed. The landing gear must be retracted if the rotorcraft is equipped with retractable gear.

(2) Section 27.952(b) provides specific load factors for the fuel tanks which are identical to the load factors stated in § 27.561. Paragraph AC 27.952 provides information and guidance for § 27.952 and may be used in conjunction with this paragraph.

b. Procedures. The procedures of paragraphs AC 27.561 and AC 27.561A continue to apply except new load factors are established for fuel tanks located below the passenger floor level. Each fuel tank and its installation are subject to the loads stated in the standard. The load factors are determined by the fuel tank location.

(1) The crash impact load factors for the airframe structure surrounding the underfloor fuel tanks are specified in § 27.561(d). The fuselage structure must be designed to resist the specified crash impact loads and to help protect the fuel tank from rupture. If equipped with retractable landing gear, the effects of the landing gear on fuel system rupture should be considered in both the retracted and unretracted configurations for fuel cell hazard purposes, only, in accordance with AC 27.952.

(2) Section 27.952(b) (see AC 27.952) specifies the design load factors for crash resistant fuel systems in an otherwise survivable impact. This section relates to § 27.561(d) as follows. The § 27.952 load factors are for the fuel tanks, other significant mass items in the fuel system, and their attachment to the rotorcraft airframe for both occupant survivability and retention of fuel in a survivable impact; whereas, the § 27.561(d) load factors only apply to the rotorcraft airframe surrounding the underfloor fuel tanks and their installation for the same reasons. These two sets of load factors are not additive. They are applied separately (as design ultimate load factors) to the portions of the rotorcraft to which they are specified to apply. The application of the § 27.561(d) load factors is described as follows. The loads generated by § 27.561(d) are intended to be applied to the airframe structure surrounding the fuel cell to ensure

that the entire airframe structure provides the appropriate level of crash resistance (i.e., stiffness, crushability, crushing rate, energy absorption capability, etc.) and to ensure that the airframe structure's failure modes (e.g., buckling, creation of sharp edges, structural spears, etc.) are such that fuel cell rupture (and the resultant post crash fire potential) is mitigated to the maximum practicable extent in a otherwise survivable emergency landing. Each fuel cell (and major fuel cell component) creates an applied load on the airframe in an emergency landing condition. These loads are determined by multiplying the worst case mass of the fuel cell (i.e., a full fuel cell) by the load factors of § 27.561(d). These loads are then applied (utilizing the appropriate design load paths) to the airframe structure surrounding the fuel cell to help design the structure for optimal crash resistance. Added stiffness effects for both a full and less than full fuel cell should be considered in the design process. A significantly less than full fuel cell will typically not have any significant stiffness effects, since in a less than full condition the fuel cell cannot typically transfer load hydraulically.

AC 27.561C. § 27.561 (Amendment 27-32) EMERGENCY LANDING CONDITIONS - GENERAL.

a. Explanation. Amendment 27-32 adds a new rearward emergency load factor of 1.5g to both §§ 27.561(b)(3)(v) and 27.561(c)(5). The addition of the 1.5g rearward load factor in § 27.561(b)(3)(v) is to provide an aft ultimate load condition for substantiation of the restraints required for retention of both occupants and significant items of mass inside the cabin that could otherwise come loose and cause injuries in an emergency landing. The addition of the 1.5g rearward load factor to § 27.561(c)(5) is to provide an aft ultimate load condition for substantiation of the support structure for retention of significant items of mass above and forward of the occupied volume(s) of the rotorcraft that could otherwise come loose and injure an occupant in an emergency landing. Amendment 27-32 also increases the forward, sideward, and downward emergency load factors of § 27.561(c)(2), (c)(3), and (c)(4), respectively; for retention of items of mass above and behind the occupied volume(s) that could otherwise come loose and injure an occupant in an emergency landing.

b. Procedures. The procedures of paragraphs AC 27.561, AC 27.561A, and AC 27.561B continue to apply except the newly specified load factors must be used. A list of the significant items of mass to be considered should be compiled by the applicant and approved by the certifying authority.

AC 27.562 § 27.562 (Amendment 27-25) EMERGENCY LANDING DYNAMIC CONDITIONS.

a. Explanation. Amendment 27-25 adds new requirements for the dynamic testing of all seats in rotorcraft. This paragraph is rewritten to incorporate the guidance previously documented in AC 20-137 dated 3/30/92.

b. Background. Improved occupant restraint in civil rotorcraft is addressed in Amendments 27-25 to the airworthiness standards, which add two dynamic crash

impact design conditions for seat and occupant restraint systems. This amendment also prescribes a shoulder harness for each occupant and adopts human impact injury criteria as a measure for occupant protection for the dynamic crash impact conditions. In addition, these amendments significantly improve occupant protection for normal category rotorcraft in a survivable emergency landing. This advisory material addresses the dynamic test conditions and the related pass-fail injury criteria for the dynamic test conditions. This material pertains to single as well as multiple seats and tandem arrangements of the seats in rotorcraft.

(1) Dynamic test methods. This guidance focuses on the use of dynamic test methods for evaluating the performance of rotorcraft seats, restraint systems, and certain related interior systems for demonstrating structural strength and the ability of those systems to protect an occupant from possible injuries in an emergency landing environment represented by the standard. These test methods differ from static test methods, which are limited to demonstrating only the structural strength of the seat or restraint system under ultimate load for at least 3 seconds. This guidance contains sources for appropriate test procedures and provides some insight into the logic of these procedures. It also defines, in part, test facility and equipment characteristics necessary for conducting these tests.

(2) Standardized test methods. Dynamic tests are often conducted at a specially equipped facility, one other than that owned by the designer or manufacturer of the test article. To obtain consistent test results, it is necessary to specify the critical test procedures in detail in the test plan, and then carefully follow these procedures when conducting the tests. This guidance defines certain critical procedures for accomplishing the tests of the seat and restraint systems and assessing the data obtained in the tests. Many of these procedures are accepted as standards by government and commercial test facilities and have been modified in this guidance only as necessary for the specific testing of rotorcraft systems.

(3) Relationship of dynamic tests to design standards. This guidance describes test procedures useful in assessing the performance of a rotorcraft seat, restraint system, and interior system. However, it is impractical to conduct sufficient tests for assessing the performance of the system throughout its entire range of possible uses in unique interior arrangements. The seat, restraint system, and related interior system should be designed for the range of occupants and environments for which it is expected to perform, not just for the dynamic test conditions described in this guidance.

(i) Occupant size. The dynamic tests are conducted with a specific, acceptable, standard anthropomorphic test dummy (ATD) representing a 50th percentile male occupant. Energy absorbing systems, restraint system loads and anchorage locations, seat adjustments, seat pitch (for multiple seat rows), head strike envelopes, etc., are typical factors directly influenced by occupant size.

(ii) Seat position and location. The tests should be sufficient to represent the range of performance expected of a seat and restraint system. A seat, especially an

adjustable flight crew seat, should be qualified for those positions approved for take-off and landing. As with static test procedures the seat is also tested to the most critical condition for the dynamic tests. For an adjustable flight crew seat, as an example, the full-up position and longitudinal impact case are expected to be the critical condition. But these dynamic tests and occupant injury assessment provide a systems approach to qualification. It is therefore necessary to test adjustable seats at the design position for the ATD. Two tests would be required to demonstrate compliance with the strength standards and with the occupant injury criteria. Alternatively adjusting the flight crew seat to its highest position with the interior features, such as an instrument panel shield, raised to maintain the proper perspective or relation to the ATD, is considered an acceptable test procedure for demonstrating compliance with the structural and occupant injury requirements for the seat and its location in a particular cockpit arrangement.

(iii) Test conditions. Only two minimum impact tests are described in the dynamic test procedures discussed in this guidance. These procedures address the tests needed to demonstrate compliance for a typical seat and restraint system installation. Additional tests may be necessary to demonstrate compliance for other types or variations of seat and restraint system installations. For example, while only one lateral load direction is specified in the tests, the system should perform properly when similarly loaded from either side.

(iv) Floor deformation. The test procedures require evaluating the effect of certain sidewall or floor deformation. The seat and its attachments and the restraint system should also perform properly if no floor deformation is present.

(v) Head impact. Should such contact occur, head impact with a seat back or the interior of the rotorcraft is evaluated by using a Head Injury Criterion (HIC), which can be measured directly in the tests discussed in this guidance or in supplementary tests of the interior. The design of the interior should protect the head from serious injury throughout the head strike envelope, not just along the head strike paths demonstrated in the test conditions discussed in this guidance.

(vi) Emergency egress. Standards for emergency evacuation of the rotorcraft are contained in FAR Part 27. The objective is to allow each occupant to leave the seat and rapidly evacuate the rotorcraft using an exit on either side of the rotorcraft.

c. Dynamic Test Methods and Facilities.

(1) General. A minimum of two dynamic tests are used to assess the performance of the rotorcraft seat, restraint system, and related interior system. The seat, the restraint, and the nearby interior all function together as a system to protect the occupant during emergency landing. The specific test conditions are shown in Figure AC 27.562-1. Explanations of the test conditions are as follows:

(i) Test 1. The test determines the protection provided when the impact environment is such that the resulting predominant impact load component (vertical) is directed along the spinal column of the occupant in combination with a horizontal (longitudinal) component. Protection against spinal injury is important and it may be necessary to provide energy absorbing (load limiting) or attenuation capability in the seat system in order to comply with the human injury criteria specified in § 27.562 (c)(7).

(ii) Test 2. The test determines the protection provided in an impact where the predominant impact load component is in the longitudinal direction in combination with a lateral component. Evaluation of head injury protection is important in this test if the head could strike some interior portion of the rotorcraft or a forward seat. Chest or spinal column injury, which might result from the upper torso restraint, is also evaluated in this test.

(iii) Tests 1 and 2. These test conditions are also significant for the structural strength of the system. Both tests should be used to assess submarining (where the seat belt slips above the ATD pelvis) and rollout of the upper torso restraint system particularly with single, diagonal torso restraint belts. Since external crash forces frequently cause significant structural deformation, simulated floor deformation is specified for the tests to prove the seat design can accommodate the relative deformation between the seat and the floor or sidewall and still function without imposing excessive loads on the seat, the attachment fittings, or floor tracks.

Illustration shows a forward facing seat ATD inertial load shown by arrow:	Test 1	Test 2
Min. V_1, fps	30	42
Max. t_r, sec.	.031	.071
Min. G	30	18.4
Deform floor:		
degrees roll	10	10
degrees pitch	10	10

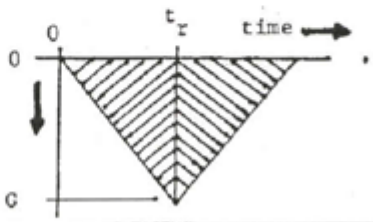

t_r = rise time
v_1 = impact velocity

FIGURE AC 27.562-1. Seat Restraint System Dynamic Tests
Normal and Transport Category Rotorcraft

(2) Test facilities. A test proposal is prepared for certification authority approval and should reflect the capability of the facility. It should be noted that a number of test facilities could be used to accomplish dynamic testing. Test facilities can be grouped into categories based on the method they use to generate the impact pulse (i.e., accelerators, decelerators, or impact with rebound) and whether the facility is a horizontal (sled) design or a vertical (drop tower) arrangement. As in all certification compliance tests, a test proposal, which may refer to certain specific or generic test equipment, is approved prior to testing. The test may be conducted anywhere, within certain availability or mutually convenient constraints, as long as the test is conducted in accordance with the approved test plan and properly witnessed.

(i) Facility Characteristics or Features. Each of the facilities has characteristics that may have advantages or disadvantages with regard to the dynamic tests discussed in this guidance. One concern is the rapid sequence of acceleration and deceleration that must take place in the tests. In a landing impact, the acceleration phase (flight) is gradual and usually well separated in time from the deceleration (crash impact) phase. In a test, the deceleration usually closely follows the acceleration. When assessing the use of a facility for the specific test procedures outlined in the recommendations, it is necessary to assess the possible consequences of this rapid sequence of acceleration and deceleration on the test articles and ATD. The standard accommodates the different facilities that are or may be available for the applicant's use. That is, the standards dictate the peak acceleration with a tolerance as stated in this AC. The "decay" in deceleration with respect to time is not dictated, thereby allowing for the different test facility equipment characteristics.

(A) Deceleration sled facilities. In an aircraft crash, the impact takes place as a deceleration, so loads are applied more naturally in test facilities that create the test impact pulse as a deceleration. Since it is simpler to design test facilities to extract energy in a controlled manner than to impart energy in a controlled manner, several different deceleration sled facilities can be found. The deceleration sled facility at the FAA's Civil Aeromedical Institute (CAMI) was referred to in developing the test procedures discussed in this and similar AC's related to airplanes.

(1) The Acceleration Phase. Sufficient velocity for the test impact pulse acquired in this phase can distort the test results if the acceleration is so high that the test articles or ATD are moved from their intended pre-test position. This inability to control the initial or onset conditions of the test would directly affect the test results. This can be avoided by using a lower acceleration for a relatively long duration and by providing a coast phase (in which the acceleration or deceleration is nearly zero) prior to the impact. This allows any dynamic oscillation in the test articles or the ATD that might be caused by the acceleration to decay. To guard against errors in data caused by pre-impact accelerations, data from the electronic test measurements (accelerations, loads) should be reviewed for the time period just before the test impact pulse to make sure all measurements are at the baseline (zero) level. Photometry film taken of the

test should also be reviewed to make certain that the ATD's used in the test and the test articles were all in their proper position prior to the test impact pulse.

(2) Orientation of test article. The horizontal test facility readily accommodates forward-facing seats in both tests discussed in this guidance, but problems can exist in positioning the test ATD in Test 1 if the seat is a rear or side-facing seat. In these cases, the ATD's tend to fall out of the seat due to the force of gravity and must be restrained in place using breakaway tape, cords, or strings. Since each installation will present its own problems, there is no simple, generally applicable, guidance. Attention should be given to positioning the ATD against the seat back and to proper positioning of the ATD's arms and legs. It will probably be necessary to build special supports for a breakaway restraint so that the restraint will not interfere with the function of the seat and occupant restraint system during the test. Photos of the test from "side of track cameras" should be reviewed to make sure that the breakaway restraint did break (or become slack) in a manner that did not unduly influence the motion of the ATD or the test articles during the test.

(B) Acceleration sled facilities. Acceleration sled facilities, usually based on the Hydraulically Controlled Gas Energized (HYGE) accelerator device, provide the impact test pulse as a controlled acceleration at the beginning of the test. The test item and the ATD are installed facing in the opposite direction from the velocity vector, opposite from the direction used on a deceleration facility, to account for the change in direction of the impact. There should be no problem with the ATD or the test items being out of position due to pre-impact sled acceleration, since there is no sled movement prior to the impact test pulse. Because of this characteristic the applicant may prefer this type of a facility.

(1) Test pulse. After the impact test pulse, when the sled is moving at the maximum test velocity, stop the sled safely. Most of the facilities of this design have limited track length available for deceleration, so that the deceleration levels can be relatively high and deceleration may begin immediately after the impact test pulse. Since the maximum response of the system usually follows (in time) the impact test pulse, any sled deceleration, which takes place during that response will affect the response and change the test results. The magnitude of change depends on the system being tested, so that no general "correction factor" can be specified. The effect can be minimized if the sled is allowed to coast, without significant deceleration, until the response is complete.

(2) Test results. If the seat or restraint system experiences a structural failure during the test pulse, the post impact deceleration can increase the damage and perhaps result in failures of unrelated components. This will complicate the determination of the initial failure mode and make product improvement more difficult. One other consideration is that the photometry film coverage of the response to impact test pulse must be accomplished when the sled is moving at near maximum velocity. Onboard cameras or a series of trackside cameras are usually used to provide film coverage of the test. Since onboard cameras frequently use a wide-angle lens placed

close to the test items, it is necessary to account for the effects of distortion and parallax when analyzing the film. The acceleration sled facility faces the same problems in accommodating rearward-facing or side-facing seats in Test 1 as the deceleration sled facility, and the corrective action is the same for both facilities.

(C) Impact-with-rebound sled facilities. One other type of horizontal test facility used is the “impact-with-rebound” sled facility. On this facility, the impact takes place as the moving sled contacts a braking system, which stores the energy of the impact, and then returns the stored energy back to the sled, causing it to rebound in the opposite direction. This facility has an advantage over acceleration or deceleration facilities in that only one-half of the required velocity for the impact would need to be generated by the facility (assuming 100 percent efficiency). Thus the track length can be shortened, and the method of generating velocity is simplified. The disadvantages of this facility combine the problems mentioned for both acceleration facilities and deceleration facilities. Since one of the reasons for this type of facility is to allow short track length to be used, it may be difficult to obtain sufficiently low acceleration just before or after the impact pulse to resolve data error problems caused by significant pre-impact and post-impact accelerations.

(D) Drop towers. Vertical test facilities can include both drop towers (decelerators) and vertical accelerators. Vertical accelerators, which can produce a longer duration/displacement impact pulse, may not be available. However, drop towers are one of the easiest facilities to build and operate and are frequently used.

(1) Acceleration phase. In these facilities, the pull of earth’s gravity is used to accelerate the sled or guided test fixture and test article to specified impact velocity to avoid the use of a complex mechanical accelerating system. Reproducing the required impact pulse may require extensive development tests for the facility. Unfortunately, these facilities are more difficult to use for conducting Test 2, particularly for typical forward-facing seats.

(2) Test article. In preparing for (longitudinal) Test 2, the seat should be installed at an angle according to the standards such that the ATD’s tend to fall from the seat due to gravity. The restraint system being tested cannot hold the ATD against the seat unless tightened excessively and will not usually locate the head, arms, or legs in their proper position relative to the seat. Design and fabrication of an auxiliary “break-away” ATD positioning restraint system just for this test are usually a complex task. The auxiliary restraint should not only position the ATD against the seat (including maintaining proper seat cushion deflection) during the pre-release condition of 1 g, it should also maintain the ATD in that proper position during the free fall to impact velocity when the system is exposed to zero g, and then it should release the ATD in a manner that does not interfere with the ATD response to impact. The usual sequence of 1 g/0 g impact, without the possibility of a useful “coast” phase, as done in horizontal facilities, causes shifts in initial conditions for the test impact pulse that can affect the response to the impact. The significance of this undesired movement will depend on

the dynamic characteristics of the system under test, and these characteristics are seldom known with sufficient accuracy to achieve the response initially.

(3) Other facets. In addition, the earth's gravity will oppose the final rebound of the ATD into the seat back, so that an adequate test of seat back strength and support for the ATD cannot be obtained. The problems in Test 1, or with rear-facing seats in Test 2, are not as difficult because the seat will support the ATD prior to the free fall. However, the zero g condition free fall that exists prior to impact will allow the ATD to "float" in the seat restraint system, perhaps changing position and certainly changing the initial impact conditions if movement occurs. Again, the development of a satisfactory auxiliary breakaway restraint system to assure correct pre-impact condition is difficult.

(ii) Test Fixtures. A test fixture is usually required to position the test article on the sled or drop carriage of the test facility and to represent the aircraft's structure floor, sidewall, bulkhead, etc. It holds the attachment fittings or floor tracks for the seat, provides the floor and sidewall deformation needed for the test, and provides a floor or footrest for the ATD, and it positions the pertinent interior items, such as instrument panels, sidewalls, bulkheads, a second row of seats, if required, for successful performance of the tests, and otherwise simulates the rotorcraft for the test. The text fixture is usually fabricated of heavy structural steel and does not necessarily simulate lightweight aircraft design or construction. The details of the fixture will depend upon the requirements of the test articles, but provisions for the specified floor and sidewall deformation are needed.

(A) Purpose of floor or sidewall deformation. The purpose of using pitch and roll deformation for the tests is to demonstrate that the seat/restraint system will remain attached to the airframe and perform properly for the tests, although the structure and seat may be more severely deformed by the forces associated with a particular crash. Typical design deficiencies addressed by the test conditions include, but are not limited to, the following:

(1) Concentrated loads may be imposed on floor fittings (studs) or tracks by seat leg attachment fittings which fit tightly or are clamped to a track or fitting, and which do not have some form of relief (especially lateral roll relief) incorporated in the design. These joint fittings can concentrate the forces on one lip of the floor and sidewall track or stud and may break the joint (track or the fitting).

(2) Similarly, loads can be concentrated on one edge of a floor track or stud fitting having an "I," "bulb head" or "mushroom" cross section and may prematurely break the flange or the fitting.

(3) Detents, pins, or collars which lock the seat leg fitting to the floor track can become disengaged, or the mechanism which is used to disengage the detents, pins, or "dogs" can be actuated and release the seat as the seat or airframe deforms.

(4) Seat assemblies that provide an energy absorbing system between a seat “bucket or pan” and a seat frame attached to the floor may not perform properly for a pre-loaded seat frame attached to the floor or sidewall. Deformation of the seat frame may cause the energy absorbers to receive unanticipated loads or cause excessive friction in the guides between the seat bucket and seat frame to lock the energy absorber in place.

(5) Restraint system anchorages attached to the airframe structure may be significantly displaced relative to the seat if the seat deforms during the test, and that displacement may inhibit proper performance of the seat/restraint system. This is especially critical for the necessary vertical stroking or displacement.

(B) Floor Deformation. The pitch and roll displacement is intended to evaluate the track or stud and leg fitting joint (axis) tolerance to angular misalignment and not necessarily axis translational displacement.

(1) For the typical aircraft seat. For a multiple or single person seat, with four seat legs mounted in the airframe on two parallel tracks, the floor deformation test fixture may consist of two parallel beams, a “pitch beam” which pivots about a lateral (y) axis, and a “roll beam” which pivots about a longitudinal (x) axis. The beams can be made of any fairly rigid structural form, box, I-beam, channel, or other appropriate cross section. The pitch beam should be capable of rotating in the x-z plane up to +/- 10° relative to the longitudinal (x) axis. The roll beam should be capable of a +/- 10° roll about the axis of the seat attachment/fitting joint (centerline of floor track or fittings). (See Figure 27.562-2 for a schematic of an installation.) A means should be provided to fasten the beams in the deformed positions.

(2) Seat and floor interface. The beams should have provision for installing floor tracks or other attachment fittings on their upper surface in a manner that does not alter the above-floor strength of the track or fitting. The track or other attachment fittings should be representative (in above-floor configuration shape and strength) of those used in the rotorcraft. Structural elements below the surface of the floor that are not considered part of the floor track or fitting may be omitted in the installation. The seat having four legs should then be installed on the beams so that the rear seat leg attachment point is near the pitch beam axis of rotation, and the seat positioning pins or locks are fastened in the same manner as specified in the test proposal and as would be used in the rotorcraft, including the adjustment of “anti-rattle” mechanisms, if employed.

(3) Test set-up. The remainder of the test preparations would then be completed (ATD installation and positioning, instrumentation installation, adjustment and calibration, camera checks, etc.). The “floor deformation” would be induced as the final action before the test is accomplished. The roll beam should first be rotated 10° and locked in place, and then the pitch beam should be rotated 10° and locked in place. The direction of rotation would be selected to produce the most critical loading condition on the seat and floor track or fitting. If the seat is fairly flexible, it may be possible to

rotate the beams by manual effort, perhaps using removable pry bars to gain mechanical advantage. However, rotation of the beams used for testing a stiff seat frame is likely to require greater effort than can be accomplished manually, and the use of removable hydraulic jacks or other devices may be necessary. If this condition is expected, provision should be made for appropriate loading points when designing the fixture. This condition is most likely to be encountered when rotating the pitch beam. The test facility personnel should adhere to appropriate safety provisions during the deformation process. The test fixture may be designed to adjust to fit a wide range of seat designs, including leg spacing, that may be encountered.

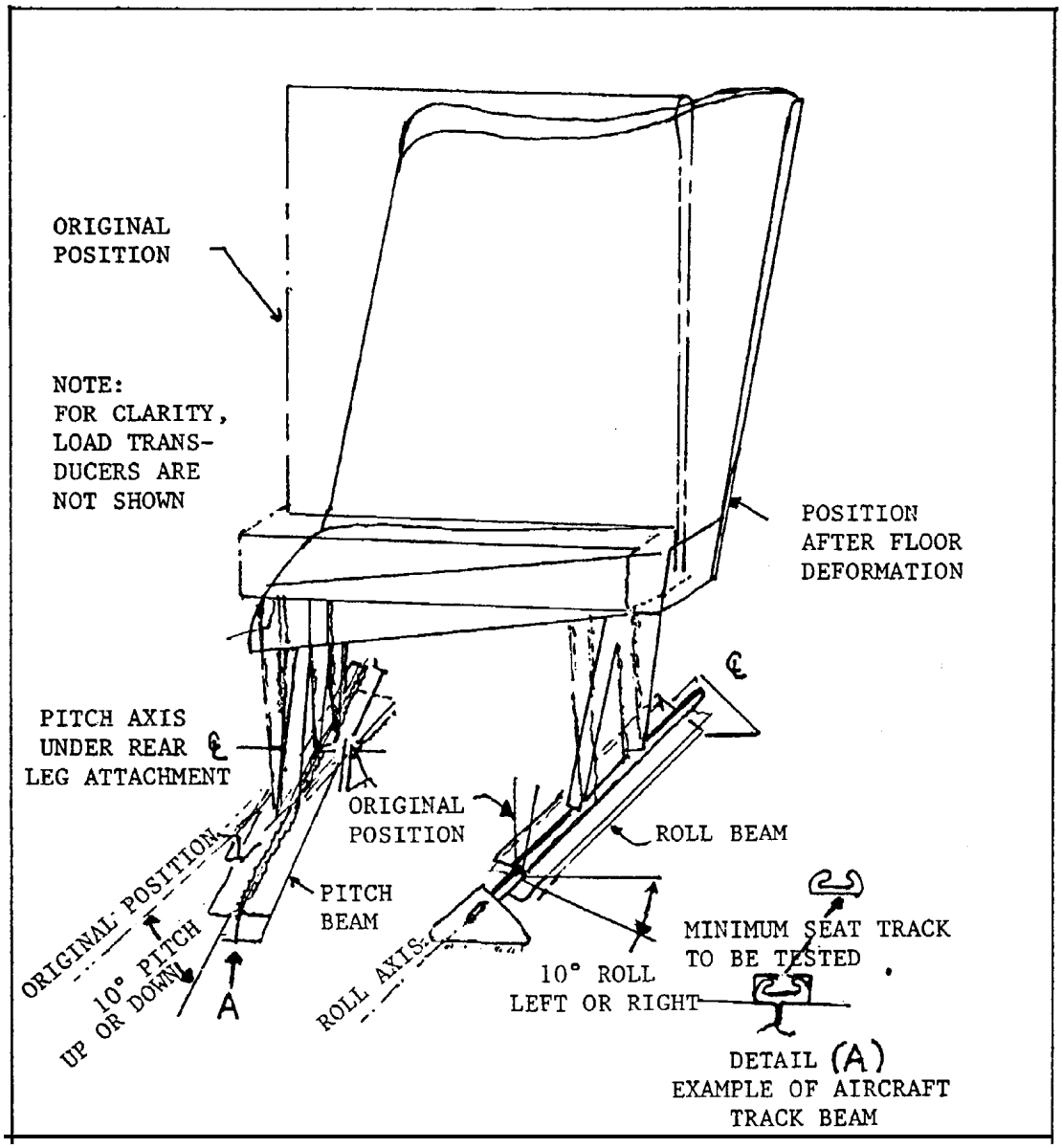

FIGURE AC 27.562-2 – Schematic Floor Deformation Fixture; Seat Legs Attached at Floor Level

(C) Alternative configurations. The preceding discussion described the fixture and floor deformation procedure that would be used for a typical seat that has four seat legs and four attachments to the fuselage floor. These test procedures may be adapted to seats having other designs. Special test fixtures may be necessary for different configurations. The following methods, while not covering all possible seat designs, provide guidance for the more common configurations of seats:

(1) Rotorcraft seats with three legs may have one central leg in front or back of the seat and one leg on each side of the seat. The central leg should be held in its undeformed position as pitch deformation is applied to one side leg and roll to the other.

(2) Seats that are “integral” with the structure without floor or sidewall attachment devices and with continuous attachments such as rows of rivets or screw, etc., are excluded from the deformation, misalignment, or preload prior to test impact. Similarly bulkhead-mounted seats, solely mounted to a bulkhead, are excluded from the deformation requirement. The test fixture could represent the seat and structure or a rigid bulkhead or an actual bulkhead panel. If a rigid bulkhead installation is used, the test fixture should transfer loads to the seat restraint system through components equivalent to the seat attachment fittings and surrounding bulkhead panel, which exist in the actual installation. Similar guidelines apply to integral seats.

(3) Seats that are attached to both the floor and a bulkhead would be tested on a fixture that positions the bulkhead surface in a plane through the axis of rotation of the pitch beam. The bulkhead surface should be located perpendicular to the plane of the floor (the rotorcraft floor surface, if one were present) in the undeformed condition or in a manner appropriate to the intended installation. Either a rigid bulkhead simulation or replica or an actual bulkhead panel may be used. If a rigid bulkhead simulation is used, the test fixture should transfer loads to the seat restraint system through components equivalent to the attachment fitting and surrounding bulkhead panel that would exist in the actual installation. The seats would be attached to the bulkhead and the floor in a manner representative of the rotorcraft installation, and the floor, as represented in the test, would then be deformed as described in paragraph b(2)(ii)(B).

(4) Seats mounted between fuselage sidewalls or to the sidewall and floor of an airplane should be tested in a manner simulating rotorcraft fuselage cross-section deformation (e.g., from circular or rectangular to flattened circular or rectangular or ellipsoidal shape) during a severe impact. The 10° roll would simulate the change in fuselage shape. Brackets should be fabricated to attach the seat to the sidewall test fixture at the same level above the fixture “floor” that would represent the installation above the rotorcraft floor. The sidewall bracket or rail should be located on the “roll” beam. It is envisaged that the sidewall rolls outward 10° about an axis at the floor and sidewall juncture. Then, as the beams are rotated to produce the critical loading condition, the combined angular and translational deformation would simulate the

deformation at the sidewall attachment during a landing impact. (See Figure 27.562-3 for a schematic of an installation.)

(5) Seats that are cantilevered from one sidewall without connection to another structure would not be subject to floor deformation. However, sidewall deformation is likely, and should be considered by warping the entire sidewall attachment plane, or the attachment points of the seat, 10° to represent the most likely fuselage sidewall deformation. This is intended to evaluate a critical condition for seat attachment or seat and occupant restraint system performance. Either a rigid sidewall simulation or an actual sidewall panel may be used. If a rigid sidewall simulation is used, the test fixture should transfer loads to the seat through components equivalent to the attachment fitting as well as the surrounding sidewall to replicate the actual installation.

(6) Side-facing seats, occupiable for takeoff and landing, are subject to the specified dynamic test conditions. Compliance with the structural requirements should be demonstrated for side-facing seats using the same conditions for the test and pass/fail criteria as for fore- and aft-facing seats. The seat should be loaded in the most critical case structurally. Means of restraining the ATDs may need to be adapted to ensure adequate retention during the test. The application of floor distortion will need to be assessed on an individual basis, depending on the design and the method of attaching the seat.

(7) A seat assembly for multiple occupants may have more than two pairs of legs. If the assembly uses a uniform cross section, deformation of only the outer leg assemblies is sufficient. The inner leg pairs may be maintained in the normal, undeformed position for the dynamic tests.

(D) Multiple Row Test Fixtures. In tests of passenger seats normally installed in rows in a rotorcraft, head impact conditions should be evaluated by tests using at least two rows of seats. This allows direct measurements of the head injury data if secondary head impact occurs and demonstrates the effect of the interaction loads between rows; e.g., due to occupant contact with the front row. (That is, ATD leg contact does not overload the front row.) These conditions are usually critical only on Test 2. The single seat row fixture used for the test should be used to position the front (first) seat row and provide appropriate floor deformation to that row. The test is critical for the first row strength. An additional simple fixture may position the second seat row in the proper location and need not provide floor deformation. The second row should be fully occupied unless it is not as critical a condition for the first seat row. Representative seat cushions and torso restraint systems should be used on both seat rows. The allowable seat pitch (longitudinal spacing) can be determined by analysis of previous test data or limited by type design data and information for the most critical condition for head or leg impact against relatively stiff structure in the first seat row. Operational limitations that specify the allowable seat pitch of the seats in rotorcraft may be considered also. No impact surface such as seats, bulkheads, etc., may be needed

for the ATD in the first seat row unless such a surface is within the expected head strike envelope whenever the seats are installed in rotorcraft.

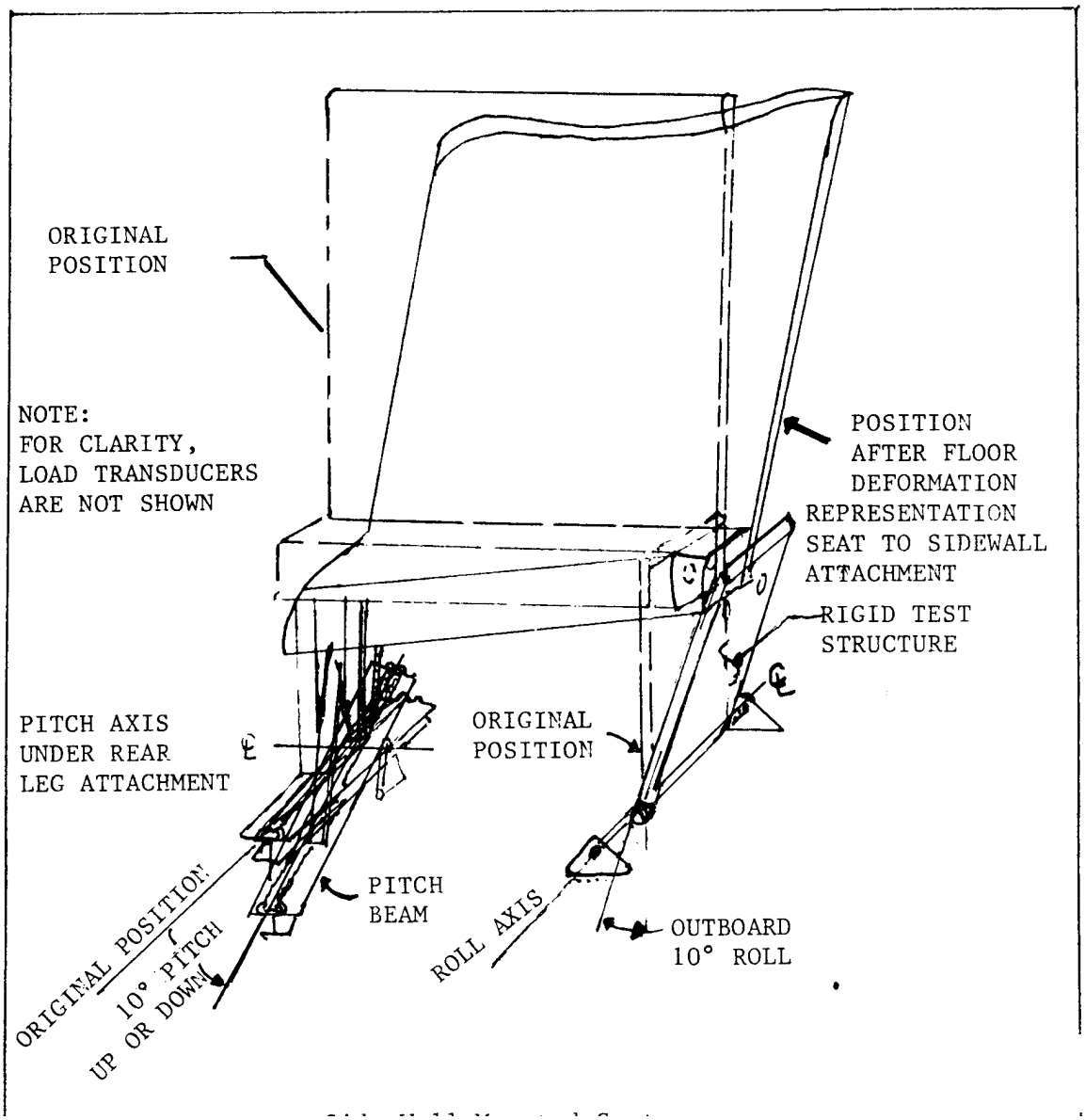

FIGURE AC 27.562-3 – Schematic Test Fixture;
Side Wall Mounted Seat

(E) Other fixture applications. Test fixtures should provide a flat footrest for an ATD used in tests of passenger and attendant seats. Flightcrew seats associated with special foot rests or foot-operated controls may use simulated footrests. The surface of the footrest should be covered with carpet (or other appropriate material) and be at a position representative of the undeformed floor or control. Test fixtures may also be necessary to provide guides or anchors for torso restraint systems or for holding instrument panels or bulkheads if necessary for the proposed tests. If these provisions are necessary, the installation should represent the configuration of the installation and be of adequate structural strength to withstand the expected test loads.

(iii) Instrumentation. Electronic and photographic instrumentation systems are essential to properly record the information for the tests discussed in this AC. Electronic instrumentation is used to measure accelerations and forces required for verifying the test environment and for measuring most of the pass/fail criteria and the floor (seat) attach loads. Photographic instrumentation is used for recording the overall qualitative results of the tests, for confirming that the lap safety belt remained on the ATD's pelvis (no submarining), and that the upper torso restraint straps remained on the ATD's shoulder, and for recording the relative deformation of the seats as it may influence rapid evacuation of the rotorcraft by the occupants. Paragraph d.(10), of this guidance contains allowable seat deformation information related to an aisle, passageway, access to exits, and so forth.

(A) Electronic instrumentation. Electronic instrumentation should be accomplished in accordance with the Society of Automotive Engineers Recommended Practice SAE J211, Instrumentation for Impact Tests. In this practice, a data channel is considered to include all of the instrumentation components from the transducer through the final data measurement, including connecting cables and any analytical procedures that could alter the magnitude or frequency content of the data. Each dynamic data channel is assigned a nominal channel "class" equivalent to the high frequency limit for that channel, based on a constant output/input ratio vs. frequency response plot which begins at 0.1 Hz (+1/2 to –1/2 db) and extends to the high frequency limit (+1/2 to –1 db). Frequency response characteristics beyond this high frequency limit are also specified. When digitizing data, the sample rate should be at least five times the –3 db cutoff frequency of the pre-sample analog filters. Since most facilities set all pre-sample analog filters for Channel Class 1,000 and since the –3 db cutoff frequency for Channel Class 1,000 is 1,650 Hz, the minimum digital sampling rate would be about 8,000 samples per second. For the dynamic tests discussed in this guidance, the dynamic data channels should comply with the following channel class characteristics:

(1) Sled or drop tower vehicle acceleration should be measured in accordance with the requirements of Channel Class 60, unless the acceleration is also integrated to obtain velocity or displacement, in which case, it should be measured in accordance with the Channel Class 180 requirements.

(2) Belt restraint system loads should be measured in accordance with the requirements of Channel Class 60.

(3) ATD head accelerations used for calculating the HIC should be measured in accordance with the requirements of Channel Class 1,000.

(4) ATD femur forces may be measured if desired in accordance with Channel Class 600.

(5) ATD pelvic/lumbar spinal column force should be measured in accordance with the requirements of Channel Class 600.

(6) The full-scale calibration range for each channel should provide sufficient dynamic range for the data being measured.

(7) Digital conversion of analog data should provide sample resolution of not less than 1 percent of full-scale input.

(B) Photographic instrumentation. Photographic instrumentation is used for documenting the response of the ATD and the test items to the dynamic test environment. Both high speed motion picture and still systems are used.

(1) High-speed motion picture cameras that provide data used to calculate displacement or velocity should operate at a nominal speed of 1,000 pictures per second. Photo instrumentation methods should not be used for measurement of acceleration. The locations of the cameras and of targets or targeted measuring points within the field of view should be measured and documented. Targets should be at least 1/100 of the field width covered by the camera and should be of contrasting colors or should contrast with their background. The center of the target should be easily discernible. Rectilinearity of the image should be documented. If the image is not rectilinear, appropriate correction factors should be used in the data analysis process. A description of photographic calibration boards or scales within the camera field of view, the camera lens focal length, and the make and model of each camera and lens should be documented for each test. Appropriate digital or serial timing should be provided on the image media. A description of the timing signal, the offset of timing signal to the image, and the means of correlating the time of the image with the time of electronic data should be provided. A rigorous, verified analytical procedure should be used for data analysis.

(2) Cameras operating at a nominal rate of 200 pictures per second or greater can be used to document the response of ATD and test items if measurements are not required. For example, actions such as movement of the pelvic restraint system webbing (lap safety belt) off of the ATD pelvis or movement of upper torso restraint webbing off of the ATD's shoulder can be observed by documentation cameras placed to obtain a "best view" of the anticipated event. These cameras should be provided with appropriate timing and a means of correlating the image with the time of electronic data.

(3) Still image cameras can be used to document the pretest installation and the posttest response of the ATD's and the test items. At least four pictures should be obtained from different positions around the test items in pretest and posttest conditions. Where an upper torso restraint system is installed, posttest pictures should be obtained before moving the ATD. For the posttest pictures, the ATD's upper torso may be rotated to the approximate upright seated position so that the condition of the restraint system may be better documented, but no other change to the posttest response of the test item or ATD's should be made. The pictures should document that the seat remained attached at all point of attachment to the test fixture. Still pictures can also be used to document posttest yielding of the seat for the purpose of showing that it would not impede the rapid evacuation of the airplane occupants. The ATD's should be removed from the seat in preparation for still pictures used for that purpose. Targets or an appropriate target grid should be included in such pictures, and the views should be selected so that potential interference with the evacuation process can be determined. For tests where the ATD's head impacts a fixture or another seat back, pictures should be taken to document the head contact areas.

(iv) ATD. The tests discussed in this guidance were developed using modified forms of the ATD specified by the United States Code of Federal Regulations, Title 49, Part 572 Anthropomorphic Test Dummies, Subpart B – 50th Percentile Male. These "Part 572B" ATD's were developed for automobile impact testing and have been shown to be reliable test devices capable of providing reproducible results in repeated testing. However, since ATD development is a continuing process, the standards allow use of "equivalent" dummies. See paragraph c.(2)(iv)(D) of this guidance. Dummy types should not be mixed when the tests discussed in this guidance are performed.

(A) Modification for measuring pelvic/lumbar column load. Since ATD's have been developed for use in automobile testing to evaluate injury protection in forward, rearward, and sideward impacts, the ATD's must be modified to measure the spinal load to comply with the § 27.562(c)(7). This load is influenced by a vertical direction component and by upper torso restraints which may produce a downward force component on the shoulders. To measure the load, a load (force) transducer is inserted into the ATD pelvis just below the lumbar column. This modification is shown in Figure 27.562-4. A commercially available "femur" load cell with end plates removed has been adapted to the modified ATD to measure the compression load between the pelvis and the lumbar spine column of the ATD. A "femur" load cell is commonly available to most test facilities and (according to specifications) is insensitive to bending and twisting moments. This feature prevents load transmission through the load cell as it measures the ATD lumbar/pelvis compression forces. To maintain the correct seated height of the ATD, the load cell is fixed in a rigid cup inserted into a hole bored in the top surface of the ATD pelvis, the top flange of which is bolted to the pelvis. If necessary, ballast should be added to the pelvis to maintain the specified weight of the assembly. Alternative approaches to measuring the axial force transmitted to the lumbar spinal column by the pelvis are acceptable if the method—

(1) Accurately measures the axial force but is insensitive to moments and forces other than that being measured;

(2) Maintains the intended alignment of the spinal column and the pelvis, the correct seated height, and the correct weight distribution of the ATD; and

(3) Does not alter the other performance characteristics of the ATD.

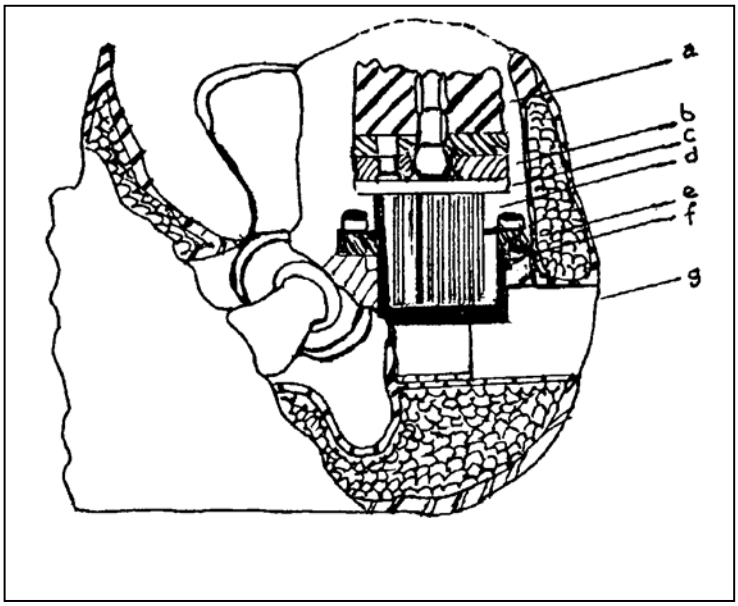

FIGURE AC 27.562-4 – Installation of Pelvic—Lumbar Spine Load Cell
In Part 572B Anthropomorphic Dummy.

(B) Figure 27.562-4 shows an acceptable installation of a femur load cell (d) at the base of the ATD lumbar spine (a). The load cell is in line with the centerline of the lumbar spine and set below the top surface of the pelvis casting to maintain the seated height of the ATD. A rigid adapter cup (e) is fabricated to hold the load cell, and a hole is bored in the ATD pelvis to accept the cup. Provide clearance between the walls of the adapter cup and the load cell and the wires leading from the cell to avoid possible interference loads. The bottom of the load cell is bolted to the adapter cup. Adapter plates having similar hole patterns in their periphery are fabricated for the lower surface of the lumbar spine (b) and the upper surface of the load cell (c). These plates are fastened to the lumbar spine and load cell with screws through holes matching threaded holes in those components and are then joined together by bolts through the peripheral holes. The flange on the adapter cup has a bolt hole pattern matching that on the pelvis. The cup is fastened to the pelvis using screws to the threaded holes in the pelvis. Spacers (f) may be placed under the flange of the cup to obtain the specified ATD seating height. Additional weight should be placed in the cavity below the adapter

cup to compensate for any weight lost because of this modification. The instrument cavity plug (g) is cut to provide clearance for the adapter cup and added weight.

(C) Other ATD modifications. Flailing of the ATD arms often causes the "clavicle" used in the Part 572B ATD to break. To reduce the frequency of this failure, the clavicle may be replaced by a component having the same shape but made of higher strength material. This may increase the ATD weight slightly, but it would be acceptable for the tests discussed in this guidance. Another useful modification is the use of "submarining indicators" on the ATD pelvis. These electronic transducers are located on the anterior surface of the ilium of the ATD pelvis without altering its contour and indicate the position of the lap safety belt as it applies loads to the pelvis. Thus they can provide a direct record that the lap safety belt remains on the pelvis during the test and eliminates the need for careful review of high-speed camera images to make that determination.

(D) Equivalent ATD. The continuing development of ATD for dynamic testing of seat restraint/crash-injury-protection systems is guided by goals of improved biofidelity (human-like response to the impact environment) and reproducibility of test results. The following criteria can be used to assess whether or not an ATD is equivalent to the present Part 572B ATD:

(1) Fabrication in accordance with design and production specifications established and published by a regulatory agency responsible for crash injury protection systems;

(2) Capability of providing data for the measurements discussed in this guidance or of being readily altered to provide the data;

(3) Evaluation by comparison with the Part 572B ATD and shown to generate similar response to the impact environment discussed in this guidance; and

(4) Any deviations from the Part 572B ATD configuration or performance are representative of the occupant of a civil aircraft in the impact environment discussed in this guidance.

(E) Temperature and humidity. Since extremes of temperature and humidity can change the performance of ATD, the tests discussed in this guidance should be conducted at a temperature from 66° F to 78° F, and at a relative humidity from 10 percent to 70 percent. The ATD should have been maintained under these conditions for at least 4 hours prior to the test.

(3) Test Preparation. Preparations for the tests should include selection of the test articles to be used in the tests, determination of the "most critical" conditions for the tests, and installation of the test articles, instrumentation, and ATD on the test fixture. Preparations pertaining to the normal operation of the test facility, such as safety

provisions and the actual procedure for accomplishment of the tests, are particular to the test facility. These may be included in a test proposal or plan.

(i) Selection of test articles. Many seat designs compose a “family or type” of seats which have the same basic structural design but differ in detail. For example, a basic seat frame configuration can allow for several different seat leg locations to permit installation in different airplanes. If these differences are of such a nature that their effect can be determined by rational analysis, then the analysis can determine the most highly stressed (“most critical”) configuration. The most highly stressed configuration would normally be selected for the dynamic tests so that the other configurations could be accepted by analysis and comparison with that configuration. The HIC depends on head impact (secondary impact after rotorcraft ground impact) and is more dependent on seat pitch for multiple row seats and on location for others than on seat structural stress for a given “family” of seats, so that the selection of the most highly stressed seat structure and the most critical seat pitch or location will permit these factors to be evaluated in one dual row test under the conditions of Test 2. Critical pelvic/lumbar spinal column forces are usually found under the vertical impact conditions of Test 1 but are influenced by the upper torso restraint in Test 2. Certain factors should be considered when employing that assumption. For example:

(A) If the test item incorporates some energy absorbing or load limiting design concept necessary to meet the test criteria or other requirement, a less severe loading condition may adversely affect the performance of that design concept as related to the pass-fail criteria. In such a case, it should be shown by rational analysis or additional testing that the design concept would continue to perform as intended even under the lower loads.

(B) If different configuration of the same basic design incorporated load-carrying elements, especially joints or fasteners, which differed in detail design, the performance of each detail design should be demonstrated in a dynamic test. Experience has shown that small details in the design often cause problems in meeting the test performance criteria.

(C) If structural strength is not the critical condition for achieving the performance criteria of the dynamic test, the true critical condition should be evaluated in a dynamic test. For example, if in one of the design configurations the restraint system attachment points are located so that the lap safety belt was more likely to slip above the ATD pelvis during the impact, then that configuration should also be dynamically tested even though the structural loading might be less. In all cases, the test item should be representative of the final production item in all structural elements and should include seat cushions, armrests and armcaps, functioning position adjustment mechanism, and correctly adjusted seat back breakover (if present), food trays or any other service or accoutrements required by the seat manufacturer or customer, and any other items of mass carried or positioned by the seat structure (e.g., weights simulating luggage carried or restrained by luggage restraint bars, fire

extinguishers, survival equipment, etc.). If these items of mass are placed in a position that could limit the function of an energy absorbing design concept in the test item, they should be of representative shape and stiffness as well as weight. That is, seat stroking should perform properly when used in rotorcraft interiors.

(ii) Consideration of test criteria. The test proposal or plan should be planned to achieve "most critical" conditions for the criteria that make up each test.

(A) For multiple occupant seat assemblies, a rational structural analysis should be used to determine the number and seat location for the ATD and the direction for seat yaw in Test 2 to provide the most critical seat structural stress. This will usually result in unequally loaded seat legs. The seat deformation procedure should be selected to increase the load on the highest loaded seat leg and to stress the floor track or fitting in the most severe manner. The seat position in Test 2 depends on the upper torso restraint design. See c.(3)(ii)C below.

(B) If multiple row testing is used to gather data for HIC in passenger seats, the seat pitch distance between seat rows should be selected within the allowable range, so that the head would be most likely to contact hard structure in the forward seat row. The effect of the 10° yaw in Test 2 and of any seat back breakover should be considered. Results from previous tests or rational analysis can be used to estimate the head strike path. Upper torso restraints may prevent head strike; however, leg kick loads into the front seat row require use of two rows. This kick load is a seat structural test not an ATD consideration.

(C) If nonsymmetrical upper torso restraints (such as single diagonal shoulder belts) are used in a system, they should be installed on the test fixture in a position representative of that in the aircraft and that would most likely allow the ATD to move out of the restraint. For example, in a forward facing crew seat equipped with a single diagonal shoulder belt, the seat should be yawed in Test 2 in a direction such that the belt passes over the trailing shoulder. This is a part of the pass/fail criteria evaluation.

(D) If a seat has sitting height adjustment, it should be tested in the highest position that could be used by a 50th percentile male occupant in the aircraft installation. See b.(3)(ii) of this guidance.

(E) Floor deformation need not be considered in assessing the consequence of any seat deformation as related to the possible impairment of rapid evacuation of the airplane. After the test, the pitch and roll floor beams can be returned to their neutral position and the necessary measurements of the seat deformation made to determine the effect, if any, on rapid evacuation.

(F) In some cases, it may not be possible to measure data for HIC during the test of the seat and torso restraint system. The design of the surrounding interior, such as the instrument panel, may not be known to the designer of the seat and torso

restraint system, or the system may be used in several applications with different interior configurations. In such cases, it will be necessary to document the head strike path and the velocity along the path. This will require careful placement of photo instrumentation cameras and location of targets on the ATD representing the ATD head center of mass so that the necessary data can be obtained. These data can be used by the interior designer to ensure that head impact with the interior will not take place or that if possible head impact occurs, it will remain within the limits of the HIC. In the event the head impacts the specific interior, the interior under evaluation should be subjected to an individual special test to measure the head impact or HIC. The test is done using a rigid 6.5-inch diameter spherical head form weighing 15 pounds, (which includes necessary mass to represent the neck and a portion of the torso). The center of the head form is guided along the previously determined head strike path so that the form contacts the interior components at the velocity previously determined during the seat and torso restraint system dynamic test. Accelerometers located at the center of the head form would provide the data necessary for the HIC computation. If the interior component to be impacted by the ATD has significant inertial response to the impact environment, it will be necessary to evaluate those features or systems, such as breakover seatbacks or instrument panels designed to move forward, relative to the seat, in a dynamic test program which includes the full ATD occupant/seat/restraint system. See b.(3)(ii) of this guidance for ATD and panel location for adjustable crew seats.

(iii) Use of ATD. ATD used in the tests discussed in this guidance should be maintained to perform in accordance with the requirements described in their specification. Periodic teardown and inspection of the ATD should be accomplished to identify and correct any worn or damaged components, and appropriate ATD calibration tests (as described in their specification) should be accomplished if major components are replaced. Each ATD should be clothed in form-fitting cotton stretch garments with short sleeves, mid-calf length pants, and shoes (size 11E) weighing about 2.5 pounds. The head and face of the ATD can be coated with chalk dust if it is desired to mark head contact areas on seats or other structure. The friction in limb joints should be set so that the joints barely restrain the weight of the limb when extended horizontally. The ATD should be placed in the seat in a uniform manner for reproducible test results. For the tests discussed in this guidance, the following procedures are adequate:

(A) The ATD should be placed in the center of the seat in as nearly a symmetrical position as possible.

(B) The ATD's back should be against the seat back without clearance. This condition can be achieved if the ATD's legs are lifted as it is lowered into the seat. Then, the ATD is pushed back into the seat back as it is lowered the last few inches into the seat pan. Once all lifting devices have been removed from the ATD, the ATD should be "rocked" slightly to settle it in the seat.

(C) The ATD knees should be separated about 4 inches.

(D) The ATD hands should be placed on the top of the legs, just behind the knees. If tests on crew seats are conducted in a mockup with aircraft controls, the ATD hands should be lightly tied to the controls. If only the seat and occupant restraint system are tested, the ATD hands should be tied together with a lack cord that provides about 24 inches of separation before the cord becomes tight. This will prevent excessive arm flail during the ATD rebound phase.

(E) To the extent that they influence the injury criteria, all seat adjustments and controls should be in the design position intended for the 50th percentile male occupant. If seat and occupant restraint systems being tested are to be used in applications where requirements (placards) dictate particular positions for landing and takeoff, those positions should be used in the tests.

(F) The feet should be in the appropriate position for the type of seat tested (flat on the floor for a passenger seat or on control pedals or on a 45° footrest for flightcrew systems). The feet should be placed so that the centerlines of the lower legs are approximately parallel, unless the need for placing the feet on aircraft controls dictates otherwise.

(iv) Installation of instrumentation. Professional practice should be followed when installing instrumentation. Care should be taken when installing the transducers to prevent deformation of the transducer body from causing errors in data. Lead-wires should be routed to avoid entanglement with the ATD or test item, and sufficient slack should be provided to allow motion of the ATD or test item without breaking the lead wires or disconnecting the transducer. Calibration procedures should consider the effect of long transducer lead-wires. Head accelerometer (transducer) should be installed in the ATD in accordance with the ATD specification and the instructions of the transducer manufacturer. The load cell between the pelvis and the lumbar spinal column should be installed as shown in Figure 27.562-4 of this guidance or in a manner that would provide equivalent data.

(A) An upper torso restraint is required by § 27.785(b). The tension load should be measured in a segment of webbing between the ATD's shoulders and the first contact of the webbing with hard structure (the anchorage point or a webbing guide). Restraint webbing should not be cut to insert a load cell in series with the webbing, since that would change the characteristics of the restraint system. Commercially available load cells can be placed over the webbing without cutting. They should be placed on free webbing and should not contact hard structure, seat upholstery, or the ATD during the test. They should not be used on double-reeved webbing, multiple-layered webbing, locally-stitched webbing, or folded webbing unless it can be demonstrated that these conditions do not cause errors in the data. These load cells should be calibrated using a length of webbing of the type used in the restraint system. If the placement of the load cell on the webbing causes the restraint system to sag, the weight of the load cell can be supported by light string or tape that will break away during the test.

(B) Loads in restraint systems attaching directly to the test fixture can be measured by three-axis load cells fixed to the test fixture at the appropriate location. These commercially available load cells measure the forces in three orthogonal directions simultaneously, so that the direction as well as the magnitude of the force can be determined. If desired, similar load cells can be used to measure forces at other boundaries between the test fixture and the test item, such as the forces transmitted by the legs of the seat into the floor track. It is possible to use independent, single axis load cells arranged to provide similar data, but care should be taken to use load cells that can withstand significant cross-axis loading or bending without causing errors in the test data, or use careful (often complex) installation to protect the load cells from cross-axis loading or bending. Since load cells are sensitive to the inertial forces of their own internal mass and to the mass of fixtures located between them and the test article, as well as to forces applied by the test article, it may be necessary to compensate the test data for that inaccuracy if the error is significant. Data for such compensation will usually be obtained from an additional dynamic test replicating the load cell installation but will not include the test item.

(v) Restraint system adjustment. The ATD should be sitting in the normal upright position. Care should be taken not to tighten the restraint system beyond the level reasonably expected in use and do not lock any emergency locking device (inertia reel) prior to the impact. Automatic locking retractors should be allowed to perform the webbing retraction and automatic locking function without assistance. Care should be taken that emergency locking retractors sensitive to acceleration do not lock prior to the impact test because of pre-impact acceleration applied by the test facility that is not present in a landing impact. If “comfort zone” retractors are used, they should be adjusted in accordance with instructions given to the user of the system. If manual adjustment of the restraint system is required, it should be sufficient to remove slack in the webbing, but it should not be adjusted so that it is unduly tight. Since the force required to adjust the length of the webbing can be as high as 11 pounds, a preload of 12-15 pounds is commonly recommended. This load is too small to be accurately measured by transducers selected to measure the high loads encountered in the impact test, so it should be measured manually as the restraint is being adjusted. Special gauges are commercially available to assist in this measurement. The preload should be checked and adjusted, if necessary, just prior to the floor deformation phase of the test.

(vi) Repetition of tests. It may be necessary to repeat the tests discussed in this AC if accurate data are not collected in critical data channels or if some other error occurs (e.g., cameras fail to operate, impact pulse inadequate, etc.). Preparation for a repeated test should follow the same steps as for the initial test. The seat should be removed from the fixture, and its attachment fittings or floor track examined and replaced, if necessary, to correct any damage. The ATD should be carefully examined and repaired or adjusted, if necessary. It is usually preferable to use a new seat and restraint system for all repeated tests to preclude system failures due to undetected damage. A new seat and restraint system should be used if there is any detectable variation from the intended design configuration.

d. Data Analysis And Compliance With The Criteria

(1) General. All data obtained in the dynamic tests should be reviewed for errors. Baseline drift, “ringing,” and other common electronic instrumentation problems should be detected and corrected before the tests. Loss of data during the test is readily observed in a plot of the data vs. time and is typically indicated by sharp discontinuities in the data, often exceeding the amplitude limits of the data collection system. If these occur early in the test in essential data channels, the data should be rejected and the test repeated. If they occur late in the test, after the maximum data in each channel has been recorded, the validity of the data should be carefully evaluated, but the maximum values of the data may still be acceptable for the tests described in this guidance. The HIC does not represent a maximum data value, but represents an integration of data over a varying time base. The head acceleration measurements used for that computation should not be accepted if errors or loss of data are apparent in the data at any time from the beginning of the test until the ATD and all test articles are at rest after the test.

(2) Impact pulse shape. Data for evaluating the impact pulse shape are obtained from an accelerometer that measures the acceleration in the direction parallel to the line of inertial response shown in Figure 27.562-1 of this guidance. The impact pulse intended for the tests discussed in this guidance has a symmetrical (isosceles) triangular shape. Since this ideal pulse is considered a minimum test condition, it is possible to evaluate the actual test pulse by comparing it with the ideal triangular pulse. The ideal pulse can be drawn to scale on the data plot of the test sled or carriage acceleration vs. time. The test pulse is acceptable if the plotted data are equal to or greater than the ideal impact pulse. This method can lead to a practical necessity of exceeding the ideal pulse by a significant degree, unless the test facility has precise control in generating the test pulse. A graphic technique may be used to evaluate test impact pulse shapes that are not precise isosceles triangles. A graphic technique is contained in paragraph f. (1) of this guidance.

(3) Head Injury Criterion (HIC). Data for determining the HIC need to be collected during the tests discussed in this guidance only if the ATD’s head is exposed to secondary impact. The HIC is a method for defining an acceptable limit; i.e., the maximum values of the HIC should not exceed 1,000 for head impact against broad interior surfaces in a crash. The HIC is reported as the maximum value, and the time interval during which the maximum value occurs is also given. Most facilities will make this computation if requested. The HIC is calculated by computer-based data analysis systems because manual attempts to use this method with real data are likely to be tedious. The HIC is calculated according to the following equation:

$$HIC = (t_2 - t_1)\left[(1/(t_2 - t_1))\int_{t_1}^{t_2} a(t)dt\right]^{2.5}_{MAX}$$

Where: t_1 and t_2 are any two points in the time range during the head impact. The range should not exceed 0.050 seconds, and a(t) is the resultant head acceleration at the center of gravity (expressed in g's) during the head form impact.

(i) Data collection. The HIC is commonly based on data obtained from three mutually perpendicular accelerometers installed in the head of the ATD in accordance with the ATD specification. Data from these accelerometers are obtained using a data system conforming to Channel Class 1,000 as described in SAE Recommended Practice J211. For the tests discussed in this guidance (both ATD and head form), only the data taken during secondary head impact with the aircraft interior need be considered. Head impact is often indicated in the data by a rapid change in the magnitude of the acceleration. Alternately, a film of the test may show head impact which can be correlated with the acceleration data by using the time base common to both electronic and photographic instrumentation, or simple contact switches on the impacted surface can be used to define the initial contact time.

(ii) HIC methodology. The following discussion outlines the basic method for computing the HIC. The magnitude of the resultant acceleration vector obtained from the three accelerometers is plotted against time. Then, beginning at the time of initial head contact (t_1), the average value of the resultant acceleration is found for each increasing increment of time ($t_2 – t_1$), then integrating the curve between the range of t_1 and t_2 and then dividing the integral value by the time ($t_2 – t_1$). This calculation should use all data points provided by the minimum 8,000 samples per second digital sampling rate for the integration. However, the maximizing time intervals need be no more precise than 0.001 seconds. The average values are then raised to the 2.5 power and multiplied by the corresponding increment of time ($t_2 – t_1$). This procedure is then repeated, increasing t_1 by 0.001 seconds for each repetition. The maximum value of the set of computations obtained from this procedure is the HIC. The procedure may be simplified by noting that the maximum value will only occur in intervals where the resultant magnitude of acceleration at t_1 is equal to the resultant magnitude of acceleration at t_2 and when the average resultant acceleration in that interval is equal to 5/3 times the acceleration at t_1 or t_2.

(iii) Limitations. HIC does not consider injuries that can occur from contact with surfaces having small contact areas or sharp edges, especially if those surfaces are relatively rigid. These injuries can occur at low impact velocities, and are often described as "cosmetic" injuries; however, they can involve irreversible nerve damage and permanent disfigurement. While there is no generally accepted test procedure to provide quantitative assessment of these injuries, a judgmental evaluation of soft tissue injuries can be made by assessing tears or cuts in a synthetic skin placed

over the ATD's head or a head form during the test. Synthetic skins are discussed in the Society of Automotive Engineers Information Report SAE J202, Synthetic Skins for Automotive Testing.

(4) Impact velocity. Impact velocity can be obtained by measurement of a time interval and a corresponding sled displacement occurring just before or after (for acceleration facilities) the test impact, and then dividing the displacement by the time interval. When making such a computation, the possible errors of the time and displacement measurements should be used to calculate a possible velocity measurement error, and the test impact velocity should exceed the velocity shown in Figure 27.562-1 by at least the velocity measurement error. If the sled is changing acceleration during the immediate pre-impact interval, or if the facility produces significant rebound of the sled, the effective impact velocity can be determined by integrating the plot of sled acceleration vs. time. If this method is used, the sled acceleration should be measured in accordance with Channel Class 180 requirements.

(5) Upper torso restraint system load. The maximum load in the upper torso restraint system webbing can be obtained directly from a plot or listing of webbing load transducer output. If a three-axis load transducer, fixed to the test fixture, is used to obtain these data, the data from each axis should be combined to provide the resultant vector magnitude. If necessary, corrections should be made for the internal mass of the transducer and the fixture weight it supports. This correction will usually be necessary only when the inertial mass or fixture weight is high or when the correction becomes critical to demonstrate that the measurements fall below the specified limits.

(6) Compressive load between the pelvis and lumbar column. The maximum compressive load between the pelvis and the lumbar column of the dummy can be obtained directly from a plot or listing of the output of the load transducer at that location. Since most load cells will indicate tension as well as compression, care should be taken that the polarity of the data has been correctly identified.

(7) Retention of upper torso restraint straps. Retention of the upper torso restraint webbing straps on the ATD's shoulders can be verified by observation of photometry or documentary camera coverage. The webbing should remain on the sloping portion of the ATD's shoulder until the ATD rebounds after the test impact and the upper torso restraint straps are no longer carrying any load. The webbing straps should not bear on the neck or side of the head and should not slip to the upper rounded portion of the upper arm during that time period.

(8) Retention of lap safety belt. Retention of the lap safety belt on the occupant's (ATD) pelvis can be verified by observation of photometry or documentary camera coverage. The lap safety belt should remain on the ATD's pelvis, bearing on or below each prominence representing the anterior superior iliac spines, until the ATD rebounds after the test impact and the lap safety belt becomes slack. If the lap safety belt does not become slack throughout the test, the belt should maintain the proper position throughout the test. Movement of the lap safety belt above the prominence is

usually indicated by an abrupt displacement of the belt into the ATD's soft abdominal insert which can be seen by careful observation of photo data from a camera located to provide a close view of the belt as it passes over the ATD's pelvis. This movement of the belt is sometimes indicated in measurements of lap safety belt load (if such measurements are made) by a transient decrease or plateau in the belt force, as the belt slips over the prominence, followed by a gradual increase in belt force as the abdominal insert is loaded by the belt. Retention of the lap safety belt can also be verified by "submarining indicators" located on the ATD's pelvis. These transducers are essentially a series of small, uncalibrated load cells placed in or above the rim of the ATD's pelvis without changing its essential geometry. They indicate the position of the lap safety belt by producing an electrical signal when they are under load from the belt.

(9) Femur load. Measuring femur loads is not required by the rotorcraft standards. If a seat is installed in an aircraft in a manner that will expose the system to loads from an occupant seated behind the seat system as well as the occupant seated in the seat system, the tests discussed in this guidance should be conducted in a manner to demonstrate that the system will perform properly under the combined loading. For example, Test 2 should be conducted with at least two rows of seats in place, as the seats in the first row carry the loads from the occupants in the first row, as well as the leg kick loads from the second row (also noted in c.(3)(ii)(A) of this guidance).

(10) Seat attachment. Documentation that the seat and restraint system has remained attached at all points of attachment should be provided by still photographs that show the intact system components in the load path between the attachment points and the occupant.

(11) Seat deformation. Occupant seats evaluated in the tests discussed in this guidance can deform permanently, either due to the action of discrete (impact) energy absorber systems included in the design or due to residual plastic deformation of their structural components. If this deformation is excessive, it could impede emergency evacuation. Each seat design may differ in this regard and should be evaluated according to its unique deformation characteristics. Permanent seat deformations are measured on the critically loaded seat subsequent to conduct of the tests required in § 27.562. The seat deformation is measured subsequent to completion of the dynamic tests and, where applicable, release of the applied pre-test floor deformation.

(i) Seats. The following post-test deformations and limitations regarding emergency egress and access to exits may be used for showing compliance with § 27.785(j):

(A) Forward or Rearward Directions. The forward or rearward deformations should not exceed a maximum of 4.0 inches (100 mm). In addition, the clearance between undeformed seat rows, measured as shown in Figure AC 27.562-5 (Dimension A), should be a minimum of 9.0 inches, except where seat rows lead to Type III or IV exits, where it should be a minimum of 11.0 inches. For seats with

deformations exceeding 4.0 inches, the undeformed clearances between seats should be increased accordingly. In addition, at seat rows leading to Type III or IV exits, a minimum of 20 inches clearance, measured above the arm rests, must be maintained between adjacent seat rows. This measurement may be made with the seat backs returned, using no more than original seat back breakover forces, to their pretest upright or structurally deformed position. At other seat rows, the most forward surface of the seat back should not deform to a distance greater than one half of the original distance to the forwardmost hard structure on the seat (see Figure 27.562-6).

(B) Downward Direction. There is no limitation on downward deformation, provided it can be demonstrated that the feet or legs of occupants seated aft would not be entrapped. Additionally, the seat bottom rotational deformation from the horizontal, measured at the centerline of each seat pan, should not exceed 20° forward (pitch down) or 35° aft (pitch up). This measurement should be made between the fore and aft extremities of the seat pan structure, considering the final position of the seat pan structure. In no case should rotation of the seat pan cause entrapment of the occupant.

(C) Sideward Direction.

(1) The deformed seat should not encroach more than 1.5 inches (40 mm) into the required space for longitudinal aisle at heights up to 25 inches (635 mm) above the floor. Determine which parts of the seat are at what heights prior to testing.

(2) The deformed seat should not encroach more than 2.0 inches (50 mm) into the longitudinal aisle space at heights 25 inches (635 mm) or more above the floor.

(D) Additional Considerations. In addition, none of the above deformations permit the seat to:

(1) Affect the operation of any emergency exit or encroach into an emergency exit opening for a distance from the exit not less than the width of the narrowest passenger seat installed.

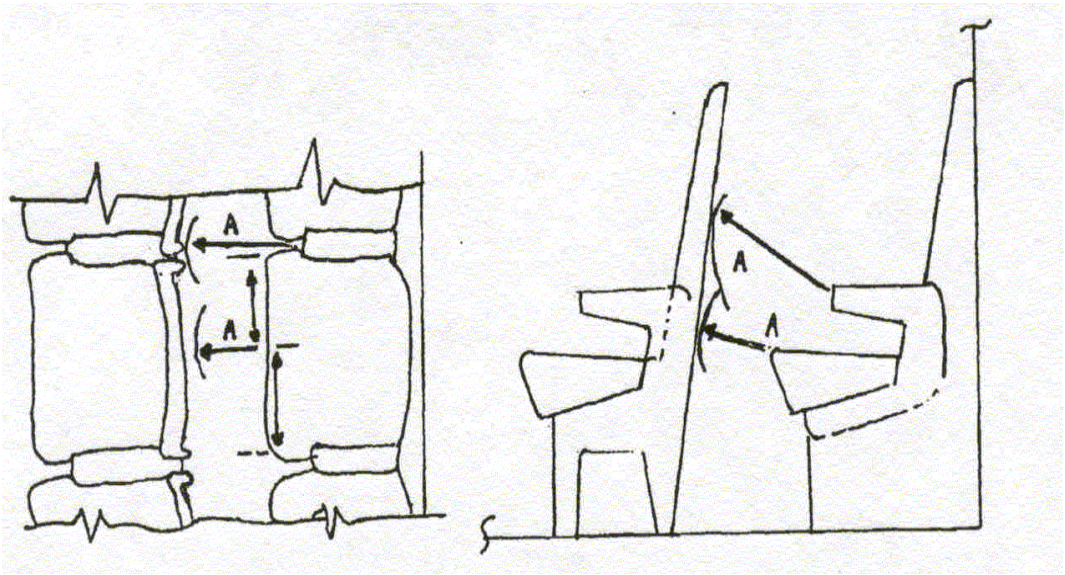

Measurement to be taken over full width of seat bottom cushion
FIGURE AC 27.562-5

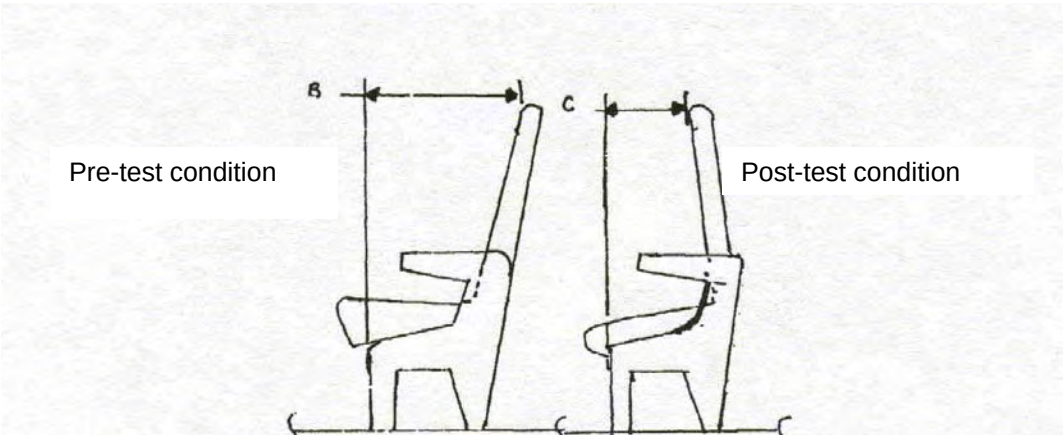

Dimension “C” must be at least 50% of Dimension “B”
FIGURE AC 27.562-6

(2) Encroach into any required passageway to large exits.

(3) Encroach more than 1.5 inches into any cross aisle or evacuation (flight attendant) assist space for certain exits.

(ii) Stowable Seats. Stowable seats, if used, should stow post-test and remain stowed without projecting into any required passageways. In addition, they should not project more than 1.5 inches into any flight attendant assist space or cross-aisle.

(A) Seats that are Stowed Manually. A post-test stowage force no greater than 10 pounds (22kg) above the original stowage force may be used to stow the seat.

(B) Seats that Stow Automatically. For a seat that may interfere with the opening of any exit, it shall automatically retract to a position that does not interfere with the exit opening as prescribed in § 27.807. For determining encroachment into passageways, cross-aisles, and assist spaces, a posttest stowage force no greater than 10 pounds (22kg), applied at a single point, may be used to assist automatic retraction.

e. Test Documentation.

(1) General. The tests discussed in this guidance should be documented in reports describing the test procedures and results. The test proposal, a description of the required tests, approved by the FAA should be referenced in the test report and contain the following:

(i) Facility data.

(A) The name and address of the test facility performing the tests.

(B) The name and telephone number of the individual at the test facility responsible for conducting the tests.

(C) A brief description and/or photograph of each test fixture.

(D) The date of the last instrumentation system calibration and the name and telephone number of the person responsible for instrumentation system calibration.

(E) A statement confirming that the data collection was done in accordance with the recommendations in this guidance or a detailed description of the actual calibration procedure used and technical analysis showing equivalence to the recommendations of this AC (Paragraph c.(2)(iii)(A)).

(F) Manufacturer, governing specification, serial number, and test weight of ATD used in the tests, and a description of any modifications or repairs performed on the ATD which could cause them to deviate from the specification.

(G) A description of the photographic-instrumentation system used in the tests (Paragraph c.(2)(iii)(B)).

(ii) Seat/Restraint system data.

(A) Manufacturers name and identifying model numbers of the seat/restraint system used in the tests, with a brief description of the system, including identification and a functional description of all major components and photographs or drawings as applicable.

(B) For unsymmetrical systems, an analysis supporting the selection of most critical conditions used in the tests.

(2) Test Proposal or Plan and Description. The description of the test should be documented in enough detail so that the tests could be reproduced by following the guidance given in the report. The procedures outlined in this guidance can be referenced in the report but should be supplemented, as necessary, to describe the unique conditions of the individual seat design.

(i) Pertinent dimensions and other details of the installation not included in the drawings of the test items should be provided. This can include footrests, restraint system webbing guides and restraint anchorages, “interior surface” simulations, bulkhead or sidewall attachments for seats or restraints, etc.

(ii) The floor deformation procedure, guided by goals of most critical loading for the test articles, should be documented.

(iii) Placement and characteristics of electronic and photographic instrumentation chosen for the test, beyond that information provided by the facility, should be documented. This can include special targets, grids or marking used for interpretation of photo documentation, and transducers and data channel characteristics for lap belt loads, floor reaction forces, or other measurements beyond those discussed in this guidance.

(iv) Any unusual or unique activity or event pertinent to conducting the test should be documented. This could include use of special “breakaway” restraints or support for the ATD’s, test items or transducers, operational conditions or activities such as delayed or aborted test procedures, and failures of test fixtures, instrumentation system components or ATD.

(3) Test results report. The documentation should include copies of all test results, analysis, and conclusions. As a minimum, the following should be documented:

(i) Impact pulse shape (Paragraph d.(2)).

(ii) HIC results for all ATD exposed to secondary head impact with interior components of the rotorcraft (Paragraph d.(3)), or head strike paths and velocities if secondary head impact is likely for future use in unique interiors (Paragraph c.(3)(iii)).

(iii) Impact velocity (Paragraph d.(4)).

(iv) Upper torso restraint system load if applicable (Paragraph d.(5)).

(v) Compressive load between the pelvis and the lumbar column (Paragraph d.(6)).

(vi) Retention of upper torso restraint straps if applicable (Paragraph d.(7)).

(vii) Retention of lap safety belt (Paragraph d.(8)).

(viii) Femur thigh loads, optional measurement.

(ix) Seat attachment (Paragraph d.(10)).

(x) Seat deformation (Paragraph d.(11)).

(xi) Seat attachment reaction time histories (Paragraph f.).

(4) Dynamic Impact Test – Pass/Fail Criteria: The dynamic impact tests should demonstrate that:

(i) The seat structure remains intact that is attached to the tracks or fittings, etc.

(ii) The occupant retention system is capable of carrying the dynamic loads.

(iii) The seat permanent deformations are within defined limits and will not significantly impede an occupant from releasing the torso restraints, standing and exiting the seat.

(iv) If the ATD's head is exposed to impact during the test, a HIC of 1,000 is not exceeded. Data may be obtained for use with other unique installations.

(v) Where upper torso restraint straps are used, tension loads in individual straps do not exceed 7.78 kN (1,750 lbs.). If dual straps are used for

restraining the upper torso, the total strap tension load does not exceed 8.90 kN (2,000 lbs.).

(vi) The maximum compressive load measured between the pelvis and the lumbar column of the (ATD) does not exceed 6.67 kN (1,500 lbs.).

(vii) Each upper torso restraint strap remains on the ATD shoulder during impact.

(viii) The pelvic restraint remains on the ATD pelvis during impact.

f. Procedures for Evaluating Impact Pulse Shapes.

(1) Acceptable Evaluation Method. Data for evaluating the impact pulse shape are obtained from an accelerometer which measures the acceleration on the test fixture or sled at the seat location or equivalent location in the direction parallel to the line of inertial response shown in Figure 27.562-1 of this guidance. The impact pulses intended for the tests discussed in this guidance have an isosceles triangle shape. These ideal pulses are considered minimum test conditions. Since the actual acquired test pulses will normally differ from the ideal, it may be necessary to evaluate the acquired test pulses to insure the minimum requirements are satisfied.

(2) An acceptable method to evaluate the pulse shape should use the following steps:

(i) Extend the calibration baseline (zero G)

(ii) Locate the maximum peak deceleration (G_p) indicated on the plot.

(iii) Construct reference lines parallel to the baseline at levels of 0.1 G_p, 0.9 G_p, and 1.0 G_p.

(iv) Construct an onset line through the intersection points of the 0.1 G_p and 0.9 G_p reference lines with the increasing (onset) portion of the data plot. The data plot should not return to zero G between the two points selected.

(v) Locate the intersection points of the onset line with the baseline and with the 1.0 G_p reference line. The interval between these two points, measured along the time axis of the data plot, is considered the rise time (t_r) of the test impact pulse.

(vi) The rise time of the test impact pulse should not exceed the value of (t_r) given in Figure AC 27.562-1 for each test.

(vii) The area under the data plot curve within the rise time of the test impact pulse, V_{ra}, should represent at least one half of the impact velocity given in Figure AC 27.562-1 for each test. If the value of peak acceleration measured in the test

exceeds the level given in Figure AC 27.562-1 by no more than 10 percent, the pelvis to lumbar spinal column force and the upper torso restraint force measured in the test may be adjusted by multiplying the measured values by the ratio of the peak acceleration given in Figure AC 27.562-1, divided by the measured peak acceleration, if necessary.

(viii) The magnitude of G_p should equal or exceed the minimum G given in Figure AC 27.562-1 for each test.

(ix) The area under the data plot curve from the intersection point of the onset line and the zero G baseline and a time not more than twice the appropriate rise time specified in Figure AC 27.562-1, plus 30 percent of the rise time later, should represent at least the impact during the test.

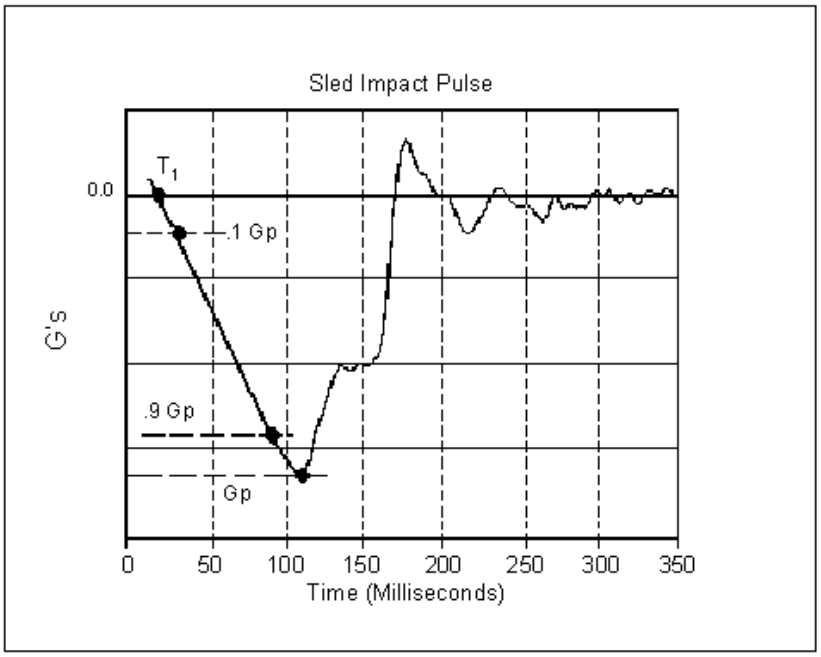

FIGURE AC 27.562-7. Impulse Shape

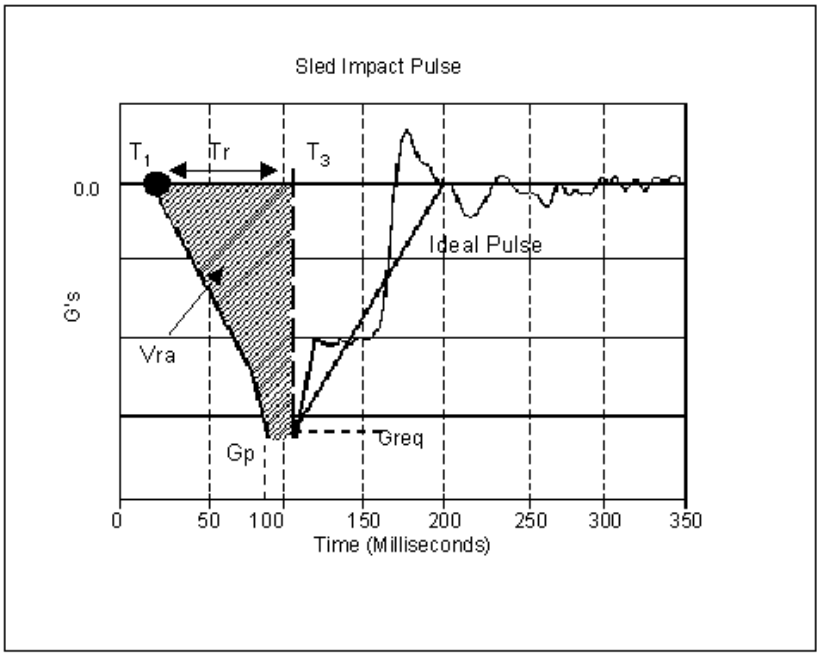

FIGURE AC 27.562-8. Change in Velocity (V_{ra})

AC 27.563 § 27.563 (Amendment 27-11) STRUCTURAL DITCHING PROVISIONS.

a. Explanation. Amendment 27-11 included certification requirements for ditching approvals. The rotorcraft must be able to sustain an emergency landing in water as prescribed by § 27.801(e).

b. Procedures. Refer to paragraph AC 27.801 for procedures.

AC 27.563A § 27.563(Amendment 27-26) STRUCTURAL DITCHING PROVISIONS.

a. Explanation. Amendment 27-26 added specific structural conditions to be considered to support the overall ditching requirements of § 27.801. These conditions are to be applied to rotorcraft for which over-water operations and associated ditching approvals are requested.

(1) The forward speed landing conditions are specified as:

(i) The rotorcraft should contact the most critical wave for probable water conditions, in the likely pitch, roll, and yaw attitudes.

(ii) The forward velocity relative to wave surface should be in a range of 0 to 30 knots with a vertical descent rate of not less than 5 FPS relative to the mean water surface.

NOTE: A forward velocity of less than 30 knots may be used for multiengine rotorcraft if it can be demonstrated that the forward velocity selected would not be exceeded in a normal one-engine-out touchdown.

(iii) Rotor lift of not more than two-thirds of the design maximum weight may be used to act through the CG throughout the landing impact.

(2) For floats fixed or deployed before water contact, the auxiliary or emergency float conditions are specified in § 27.563(b)(1). Loads for a fully immersed float should be applied (unless it is shown that full immersion is unlikely). If full immersion is unlikely, loads resulting from restoring moments are specified for sidewind and unsymmetrical rotorcraft landing.

(3) Floats deployed after water contact are normally considered fully immersed during and after full inflation. An exception would be when the inflation interval is long enough that full immersion of the inflated floats does not occur; e.g., deceleration of the rotorcraft during water impact and natural buoyancy of the hull prevent full immersion loads on the fully inflated floats.

b. Procedures.

(1) The rotorcraft support structure, structure-float attachments, and floats should be substantiated for rational limit and ultimate ditching loads.

(2) The most severe wave heights for which approval is desired are to be considered. A minimum of Sea State 4 condition wave heights should be considered (reference paragraph AC 27.801 (§ 27.801) for a description of Sea State 4 conditions).

(3) The landing structural design consideration should be based on water impact with a rotor lift of not more than two-thirds of the maximum design weight acting through the center of gravity under the following conditions:

(i) Forward velocities of 0 to 30 knots (or a reduced maximum forward velocity if it can be demonstrated that a lower maximum velocity would not be exceeded in a normal one-engine-out landing).

(ii) The rotorcraft pitch attitude that would reasonably be expected to occur in service. Autorotation flight tests or one-engine-inoperative flight tests, as applicable, should be used to confirm the attitude selected. This information should be included in the Type Inspection Report.

(iii) Likely roll and yaw attitudes.

(iv) Vertical descent velocity of 5 FPS or greater.

(4) Landing load factors and water load distribution may be determined by water drop tests or analysis based on tests.

(5) Auxiliary or emergency float loads should be determined by full immersion or the use of restoring moments required to react upsetting moments caused by sidewind, asymmetrical rotorcraft landing, water wave action, rotorcraft inertia, and probable structure damage and punctures considered under § 27.801. Auxiliary or emergency float loads may be determined by tests or analysis based on tests.

(6) Floats deployed after initial water contact are required to be substantiated by tests or analysis for the specified immersion loads (same as for (5) above and for the specified combined vertical and drag loads).

SUBPART C - STRENGTH REQUIREMENTS

FATIGUE EVALUATION

AC 27.571. § 27.571 (Amendment 27-26) FATIGUE EVALUATION OF FLIGHT STRUCTURE.

a. Explanation. An evaluation is required to assure structural reliability of the rotorcraft in flight. This evaluation may take the form of either tests or analysis. During the certification process, fatigue testing is more effective than analysis alone in identifying and preventing cracking that may occur during service. Analysis used for substantiation should be validated by tests.

(1) Chapter 3 AC 27 MG 11 contains background information and acceptable means of compliance with the requirements. A safe life may be assigned or the structure may be fail safe as prescribed or a combination of these may be used.

(2) Mandatory inspections, service life (replacement times) etc., determined in complying with the standard shall be placed in the Airworthiness Limitations Section of the Instructions for Continued Airworthiness (also called Maintenance Manual). See Appendix A of FAR Part 27, paragraphs A27.4 and paragraph AC 27.1529 for information.

(3) Amendment 27-26 amended the standard to require evaluation of the landing gear and their related primary attachments.

(4) Amendment 27-26 also amended the standard to require evaluation of ground-air-ground cycles on the rotorcraft, and if applicable, of external cargo operations. Previously external cargo operations were evaluated whenever the rotorcraft cargo combination exceeded the "standard" maximum certificated gross weight, and the CG range specified in § 27.25(c). If these limits were not exceeded, an evaluation was not required by the standard prior to Amendment 27-26.

b. Procedures.

(1) The fatigue evaluation requires consideration of the following factors:

(i) Identification of the structure/components to be considered.

(ii) The stress during operating conditions.

(iii) The operating spectrum or frequency of occurrence including frequency of ground-air-ground cycles, as well as external cargo operations.

(iv) Fatigue strength, and/or fatigue crack propagation characteristics, residual strength of the cracked structure.

(2) Since the design limits, e.g., rotor RPM (maximum and minimum), airspeed, and blade angles (thrust, weight, etc.) affect the fatigue life of the rotor system, it is necessary that flight conditions be conducted at limits that are appropriate for the particular rotorcraft and at the correct combination of these limits. It will be the responsibility of engineering and flight test personnel to determine that the flight strain program proposal includes conditions of flight at the various combinations of rotor RPM, airspeed, thrust, etc., that will be representative of the limits used in service. The flight test personnel should assure that the severity of the maneuvers to be investigated is such that actual service use will not be more severe. Verification that proposed maneuvers are suitable may be achieved by:

(i) Flying a representative set of maneuvers with the applicant's pilot in the test aircraft at noncritical combinations of weight, CG, and speed. (An FAA/AUTHORITY letter for specific test authorization would ordinarily be required.) If the procedure is used, the applicant should provide adequate preliminary flight strain data from development or other tests to confirm a cleared (non-critical) flight envelope for conduct of these representative maneuvers.

(ii) Flying a representative set of maneuvers with the applicant's pilot in a similar (certified) model to assess and agree upon the required maneuvers, control deflections, and aircraft rates. The required maneuvers or conditions will be specified in the flight strain program plan.

(iii) Flying a chase aircraft which has a flight envelope appropriate to allow visual confirmation of the proposed and programmed flight maneuvers.

(iv) Observation of telemetered flight data to assure desired control deflections, rates, and aircraft attitudes.

(v) Some combinations of items b(2)(i) through b(2)(iv) above.

(3) Assessing the operation spectrum and the flight loads or strain measurement program will involve airframe, propulsion, and flight test personnel.

(4) Variation in the operating or loading spectrum among models, and variations in the spectrum for a particular model rotorcraft, should be evaluated. Figure AC 27 MG 11-7 contains typical flight load measurement program conditions to be investigated. An example of a twin turbine spectrum is presented in Figure AC 27 MG 11-9. The tables should be used only as a guide and should be modified as necessary for each particular rotorcraft design.

(5) The difference in loading spectrum for different models that may be anticipated is illustrated by comparing the percentage of time assigned to level flight conditions, specifically 0.8 V_H to 1.0 V_H for three different rotorcraft designs as shown in figure AC 27.571-1. (V_H is the maximum airspeed at maximum continuous power in level flight.) The first column applies to a single-piston-engine powered small rotorcraft used in utility operations. The second column is appropriate for a single-turbine-engine powered seven-place small business and utility rotorcraft. The third column is appropriate for a twin-engine-powered 13 passenger transport rotorcraft. It should be noted that the level flight percentage of occurrences shown in figure AC 27.571-1 for the turbine utility business and turbine transport rotorcraft are examples of particular designs. The high percentage of time shown in this level flight regime could be unconservative for some designs, especially if the stresses under these design conditions produce an infinite fatigue life for the particular component. The fatigue spectrum percentage of occurrences should be modified according to the intended operation usage of the rotorcraft. However, a conservative application should be considered. This variation illustrates the "tailoring" of the loading spectrum for the type of rotorcraft and the anticipated usage.

FIGURE AC 27.571-1

Comparison Percent of Time in Level Flight

Piston Utility		Turbine Utility Business		Twin Turbine Transport	
0.8 V_{NE}	25%	0.8 V_H	16%	0.8 V_H	15%
1.0 V_H	15%	0.9 V_H	21%	0.9 V_H	20%
1.0 V_{NE}	3%	1.0 V_H	24%	1.0 V_H	38%
Total	43%		61%		73%

(6) External cargo operations are a unique and demanding operation. A "logging" operator may use 50 maximum power applications per flight hour to move logs from a cutting site to a hauling site. Power is used to accelerate, decelerate, or hover prior to load release. Lifting loads over an obstruction or natural barrier is another example of very frequent high power applications for takeoff and for hovering over the release area. Similar types of operations require flight loads data to assess the effects on fatigue critical components.

(7) The impact of the external cargo operation on standard configuration limits should be assessed to determine whether or not the component service lives, inspections, etc., will be affected. The assessment may be done by calculating an "external cargo configuration" service life for each critical component. The lowest

service life obtained from standard configuration flight loads data and loading spectrum, or from external cargo configuration flight loads data and loading spectrum or from frequent ground-air-ground cycles is generally the approved service life or replacement time. Since the regulatory maintenance and operating rules do not require recording time in service for the different types of operations, this procedure could be used if an "operational cycles" equation for equivalent flight hours is not approved (see (8) below).

(8) The Airworthiness Limitations Section of the maintenance manual shall contain the required information derived from complying with the standard. If an "operational cycles" equation for "equivalent flight hours" is approved under the standard, the equation is included in this approved section of the manual.

(9) The applicant should plan to conduct a flight loads survey program for both a standard configuration and an external cargo configuration, if applicable. The ground-air-ground cycle is inherent in these conditions. This procedure will avoid delays associated with reinstallation and calibration of equipment.

AC 27.571A. §27.571 (Amendment 27-33) FATIGUE EVALUATION OF FLIGHT STRUCTURE FOR CATEGORY A CERTIFICATION.

a. Explanation. Amendment 27-33 added Appendix C to specify the requirements for Category A certification of normal category rotorcraft. The requirement for fatigue tolerance evaluation will require test evidence to support the analysis.

b. Procedures. For Category A certification, the tests specified in paragraph AC 29.571A are required for fatigue tolerance evaluation. Paragraph AC 29.571A is repeated in this section.

(1) Fatigue test evidence is necessary for the fatigue evaluation of gears. The test evidence should be provided by rotating tests of complete gearbox specimens operating under power. The tests provide the basis for analysis leading to the establishment of safe life.

(2) The tests are conducted specifically for the purpose of gear tooth evaluation, and components subjected to the tests do not have to be considered serviceable on completion of the test. Excessive wear on bearings and shafts and marking (including spalling) of bearings and gear teeth are acceptable provided no fatigue damage is evident on the gear teeth. However fatigue damage other than tooth fatigue should be considered for test validity and the integrity of the affected part confirmed as necessary.

(3) The test conditions (torque versus number of cycles) should permit the setting of mean strength curve(s) to be associated with each primary gear in the drive train. The test conditions, should at a minimum, encompass those power levels for which repeated application inservice is expected under normal circumstances. The S-N curve(s), for the material and type of gear, should be reduced by a factor of safety to

take into account material and manufacturing variability. The factored curve will then be used in conjunction with the flight power spectrum to determine a life (limited or unlimited) for the gears in the primary drive system.

(4) Special procedures, which do not affect fatigue evaluation of the gear teeth, may be allowed to facilitate completion of the test provided they have been justified and they do not affect life determination. These include periodic interruption for inspection, etc., replacement of non-critical parts and the use of special lubricants, special cooling systems, and methods to prevent unrepresentative deflections at the test torque levels.

(5) From evidence in relation to the strength of steel gears of conventional design, it is accepted that adequate fatigue strength can be demonstrated by the use of the above safety factor of 1.4 for a single test, 1.35 for two tests, 1.32 for three tests, and 1.3 for four or more tests. Where several tests are to be conducted, specimens should be selected from different manufacturing batches if practicable.

(6) The demonstration of infinite life for gear teeth will normally require tests of a minimum of 10^7 cycles duration at factored power levels. Use of shorter duration tests should be justified.

~~[The remainder of this page intentionally left blank.]~~

AC 29.573 § 29.573 (Amendment 29-54) DAMAGE TOLERANCE AND FATIGUE EVALULATION OF COMPOSITE ROTORCRAFT STRUCTURES.

[See the added (new) AC 29.573 (dated 12/1/2011) that is an interim update, posted as a separate document in RGL with this Master AC 27-1B thru Chg 3.)

[This page intentionally left blank.]

CHAPTER 2. PART 27
AIRWORTHINESS STANDARDS
NORMAL CATEGORY ROTORCRAFT

SUBPART D - DESIGN AND CONSTRUCTION

DESIGN AND CONSTRUCTION - GENERAL

AC 27.601. § 27.601 DESIGN.

a. Explanation.

(1) This rule requires that no design features or details be used that experience has shown to be hazardous or unreliable.

(2) Further, the rule requires that the suitability of each questionable design detail and part must be established by tests.

b. Procedures.

(1) This rule is met partially by a review of service history of earlier model rotorcraft, or for a new model, review of service experience of models with similar design features. Specifically, this rule covers “features or details” such as the following:

(i) Seat track-to-seat interface fittings. These fittings should have adequate locking devices to prevent both premature structural failure and premature unlatching.

(ii) Seat belt and harness should be of a type and construction that service experience has shown to be easy to don and unlatch and remove. They should also be of a type that is reliable, does not interfere with egress, and does not sustain unnecessary wear and tear under normal operations.

(iii) Metallic parts less than a certain thickness gauge and composite materials less than a certain number of plies should not be used. The minimum thickness and number of plies should be based to a large degree on service (normal wear and tear) experience with similar designs.

(2) The effects of service wear on the loading of critical components should be considered. Flight testing, ground testing, and analyses may be used in these considerations.

(3) Tests are required for details and parts which the applicant chooses to use after questions have arisen concerning their suitability.

AC 27.602 § 27.602 CRITICAL PARTS.

a. Explanation.

(1) Critical parts requirements apply to structural components, rotor drive systems, rotors, and mechanical control systems.

(2) The objective of identifying critical parts is to ensure that critical parts are controlled during design, manufacture, and throughout their service life so that the risk of failure in service is minimized by ensuring that the critical parts maintain the critical characteristics on which certification is based.

(3) Definitions with respect to § 27.602:

(i) The use of the word "could" in paragraph 27.602(a) of the rule means that this failure assessment should consider the effect of flight regime (i.e., forward flight, hover, etc.). The operational environment need not be considered.

(ii) With respect to this rule, the term "catastrophic" means the inability to conduct an autorotation to a safe landing, without exceptional piloting skills, assuming a suitable landing surface is available.

(iii) The use of the word "and" in paragraph 27.602(a) of the rule means the part must have both a catastrophic failure mode together with one or more critical characteristics.

(iv) With respect to this rule, the term "part" means one piece, or two or more pieces permanently joined together.

(v) With respect to this rule, the term "critical characteristic" means any dimension, tolerance, finish, material, or any manufacturing or inspection process, or other feature which cannot tolerate variation from type design requirements and, if nonconforming, would cause failure of the critical part.

(4) Many rotorcraft manufacturers already have procedures in place within their companies for handling "critical parts." These plans may be required by their dealings with other customers, frequently military (e.g., US DoD, UK MoD, Italian MoD). Although these plans may have slightly different definitions of "critical parts" which have sometimes been called "Flight Safety Parts," "Critical Parts," "Vital Parts," or "Identifiable Parts," they have in the past been accepted as meeting the intent of this requirement and providing the expected level of safety. It is acceptable for these plans to use alternative names and terminology provided they meet the intent of this requirement.

b. Procedures. The rotorcraft manufacturer should establish a Critical Parts Plan, which identifies and controls the critical characteristics. The policies and procedures which constitute that plan should be such as to ensure that--

(1) All critical parts of the rotorcraft are identified by means of an appropriate failure assessment and a Critical Parts List is established.

(2) Documentation draws the attention of the personnel involved in the design, manufacture, maintenance, inspection, and overhaul of a critical part to the special nature of the part and details the relevant special instructions. For example all drawings, work sheets, inspection documents, etc., could be prominently annotated with the words "Critical Part" or equivalent and the Instructions for Continued Airworthiness and Overhaul Manuals (if applicable) should clearly identify critical parts and include the needed maintenance and overhaul instructions. The documentation should:

(i) Contain comprehensive instructions for the maintenance, inspection and overhaul of critical parts and emphasize the importance of these special procedures;

(ii) Indicate to operators and overhaulers that unauthorized repairs or modifications to critical parts may have hazardous consequences;

(iii) Emphasize the need for careful handling and protection against damage or corrosion during maintenance, overhaul, storage, and transportation and accurate recording and control of service life (if applicable);

(iv) Require notification of the manufacturer of any unusual wear or deterioration of critical parts and the return of affected parts for investigation when appropriate;

(3) Procedures should be established for identifying and controlling critical characteristics.

(4) To the extent needed for control of critical characteristics, procedures and processes for manufacturing critical parts (including test articles) are defined (for example material source, forging procedures, machining operations and sequence, inspection techniques, and acceptance and rejection criteria). Procedures for changing these manufacturing procedures should also be established.

(5) Any changes to the manufacturing procedures, to the design of a critical part, to the approved operating environment, or to the design loading spectrum are evaluated to establish the effects, if any, on the fatigue evaluation of the part.

(6) Materials review procedures for critical parts (i.e., procedures for determining the disposition of parts having manufacturing errors or material flaws) are in accordance with paragraphs (4) and (5) above.

(7) Critical parts are identified as required, and relevant records relating to the identification are maintained such that it is possible to establish the manufacturing history of the individual parts or batches of parts.

(8) The critical characteristics of critical parts produced in whole or in part by suppliers are maintained.

AC 27.603. § 27.603 (Amendment 27-16) MATERIALS.

a. Explanation. The rule requires that the suitability and durability of materials, the failure of which could adversely affect safety, must be determined by three-fold considerations:

(1) Considerations based on experience or tests.

(2) By meeting approved specifications.

(3) By taking into account environmental conditions such as temperature and humidity.

b. Procedures.

(1) Where possible, materials that meet widely accepted specifications such as AISI, SAE, MIL, or AMS and alloys which have favorable experience or tests should be used. Where company developed materials are used, approved specifications are required to ensure the developed properties are duplicated in each lot of material.

(2) Environmental conditions may be taken into account by service experience, coupon testing, full-scale testing, or a combination of testing and experience, MIL-HDBK's -5, -17, and -23 include some environmental effects and contain reference to additional methods of testing for environmental effects.

(3) Section 27.613 concerns strength properties and design values. (See paragraph AC 27.613.)

AC 27.605. § 27.605 (Amendment 27-16) FABRICATION METHODS.

a. Explanation. The basic requirement of this rule is that the methods of fabrication must produce sound structure and produce it consistently.

(1) A process specification is required for fabrication processes requiring close control.

(2) A test program is explicitly required for each new aircraft fabrication method.

b. Procedures.

(1) The approved specifications required by this rule may either be established government/industry specifications such as MIL, AISI, ASIM, or SAE; or the specifications may be company-developed proprietary specifications. Sufficient data should be provided to the FAA/AUTHORITY aircraft engineering offices to show that the desired features are provided by the process specification. In addition, sufficient process controls, inspections, and tests should be coordinated with FAA/AUTHORITY manufacturing inspection personnel to ensure that continued quality of the process is provided.

(2) In addition to the examples given by the rule; i.e., gluing, spot welding, and heat treating process, specifications should also be prepared for types of welding other than spot welding, for platings of metals, for protective finishes (other than decorative), for sealing, and for unique fabrication methods such as those used for composite materials.

(3) The required test programs should consider static strength effects, fatigue strength effects, and environmental effects as appropriate to the processes.

AC 27.607. § 27.607 (Amendment 27-4) FASTENERS.

a. Explanation. Section 27.607 of Amendment 27-4 requires dual locking removable fasteners in critical locations. A nonfriction locking device is specifically required in any bolt subject to rotation, as stated in the rules.

b. Procedures. Advisory Circular 20-71 contains information, procedures, and means of complying with § 27.607 of Amendment 27-4.

AC 27.609. § 27.609 PROTECTION OF STRUCTURE.

a. Explanation. The structure should be suitably protected as specified in the rule to maintain its design strength. Ventilation and drainage provisions must be provided as specified in the rule. Overboard drains should be furnished for corrosive or waste liquids. Drains for flammable fluids are specified in other rules such as §§ 27.999 and 27.1193.

b. Procedures.

(1) The structure may be preserved, painted, or treated with chemical films to protect it from strength deterioration. An approved process specification should be used for these types of treatments.

(2) Parts may be plated or chemically treated, such as anodized, for protection. An evaluation and substantiation may be required to ensure the structure or parts are not adversely affected during, or as a result of, the plating or treatment process. (§ 27.605 concerns approval of process specifications and fabrication methods.)

(3) Plating or material surface hardness or composition changes may require fatigue substantiation to ensure the fatigue strength is not altered or is otherwise properly assessed. An approved process specification should be used for these types of treatments.

(4) To prevent water accumulation, drain holes should be placed at possible dams such as bulkheads and at low points in the fuselage and in the stabilizing surfaces.

(5) Control tubes and tubes used as primary mount structures (i.e., transmission support structure and engine mount structure) should be designed to prevent entry and collection of corrosive fluids or vapor, including water.

(i) A closed insert in each tube end may be used.

(ii) A sealant applied around the tube ends and around each rivet head may be used.

(6) Overboard drains should discharge clear of the entire rotorcraft. Dyed water discharged in flight may be used to ensure fluids are properly drained.

(7) Drains or vents which handle corrosive fumes (such as battery case vent line) may incorporate a container with an agent to neutralize the fumes prior to venting overboard.

(8) Welded tubes should be flushed and sealed after welding in accordance with an approved process specification.

(9) Refer to AC 43-4, “Corrosion Control for Aircraft,“ for further procedures.

AC 27.610. <u>§ 27.610 (Amendment 27-21) LIGHTNING PROTECTION</u>.

a. <u>Background.</u> During the initial development and promulgation of the standards concerning the airworthiness of rotorcraft, it was not necessary to specify design features that would protect the rotorcraft from the meteorological phenomenon of lightning. This was due, in part, to the fact that rotorcraft were primarily operated in a VFR and nonicing environment. Also, a prudent pilot avoided thunderstorms where the possibility of encountering severe weather and a lightning strike was much greater. The construction, design, and operating environment of civil rotorcraft have changed markedly within the past two decades. Many rotorcraft are now authorized to fly IFR in all types of weather environment. One transport design has been approved for flight into known icing conditions. Additionally, many rotorcraft now use the same advanced technologies in structures and systems as do airplanes. Because of these facts, a specific rule on lightning protection of rotorcraft was adopted in Amendment 27-21. For further information, see the preamble of Amendment 27-21 (49 FR 44433; 11/6/84), Proposal 2-14. Section 27.610 is similar to § 25.581 which applies to the protection of

structures of transport airplanes. However, the standard provides for specific protection of the aircraft structures as well as the systems of the rotorcraft. Section 27.610 is the standard referenced in the requirement for lightning protection of systems in § 27.1309(d) (see paragraph AC 27.1309). In addition, the protection of fuel systems from the effects of lightning is found and referenced in Report DOT/FAA/CT-83/3, User Manual for AC 20-53A, Protection of Airplane Fuel Systems Against Fuel Vapor Ignition Due to Lightning, dated April 12, 1985.

b. Explanation.

(1) The regulation requires that the rotorcraft must be protected against the catastrophic effects of lightning. This means that a lightning strike encounter should not prevent the continued safe operation of the rotorcraft.

(2) Paragraph AC 27.1309 addresses the protection required for systems. The protection of the rotorcraft structures may be accomplished in a similar fashion.

(3) The structural components of the rotorcraft should be designed in such a manner that the lightning current may be safely diverted or conducted through the rotorcraft without damaging any critical structure or without causing damage to noncritical structure, the failure of which would preclude the continued safe flight and landing of the rotorcraft. A radome or fin cap which explodes due to a lightning strike and results in catastrophic damage to main or tail rotors is a scenario of lightning damage to a noncritical structure which has catastrophic results.

(4) This type of strike effect on the rotorcraft is generally referred to as direct effects. Direct effects are damage which includes the burning, eroding, blasting, or structural deformation produced by the high currents of the lightning flash passing through the rotorcraft structure.

c. Procedures.

(1) Certification Plan. Although not a regulatory requirement, it is recommended that a formal written certification plan be used to assure regulatory compliance. The use of this plan is beneficial to both the applicant and the FAA/AUTHORITY because it identifies and defines an acceptable resolution to the critical issues early in the certification process. These are the usual steps to be followed when utilizing a certification plan:

(i) Prepare a certification plan which describes the analytical procedures and/or the qualification tests to be utilized to demonstrate protection effectiveness. Test proposals should describe the rotorcraft and system to be utilized, test drawing(s) as required, the method of installation that simulates the production installation, the lightning zone(s) applicable, the lightning simulation method(s), test voltage or current waveforms to be used, diagnostic methods, and the appropriate schedules and location(s) of proposed test(s).

NOTE: The recommended reference for quantification of the lightning environment, the determination of the aircraft lightning strike zones, and the determination of appropriate test methods is SAE AE4L Committee Report, dated June 20, 1978, Lightning Test Waveforms and Techniques for Aerospace Vehicles and Hardware. Additionally, information may also be found in the NASA publication No. RP-1008, Lightning Protection of Aircraft.

(ii) Obtain FAA/AUTHORITY concurrence that the certification plan is adequate.

(iii) Obtain FAA/AUTHORITY detail part conformity of the test articles and installation conformity of applicable portions of the test setup. Obtain FAA/AUTHORITY approval of the test proposal. A comprehensive test proposal may be used.

(iv) Schedule FAA/AUTHORITY witnessing of the test or tests proposed.

(v) Submit a test report describing all results and obtain FAA/AUTHORITY approval of each report prepared.

(2) Test Conditions. Refer to SAE AE4L Committee Report, dated June 20, 1978, and the NASA publication noted in paragraph c(1)(i) to determine the appropriate test parameters.

(3) Aircraft Design Features and Criteria. MIL-B-5087B, Amendment 2 or later amendment, contains valuable information to assist the designer. Figure 6 in the specification contains fault current versus bond resistance information. Refer to the NASA publication noted above also.

(i) Aluminum wire screen or mesh applied to the control or stabilizing surface and electrically bonded at each joint or juncture has been successful in conducting the current without serious damage.

(ii) Metal skin surfaces combined with surface wire screen or mesh have been successful. Also, successful use of surface treatment has been reported. For composites, treatments such as the following have been used: flame spray coatings, aluminized glass, metal foil, metallized fabrics, and conductive paint.

(iii) Ball or roller bearings may be used to conduct the current at rotating joints. However, increased friction or possible seizure of the bearing may occur. The potential for this should be evaluated. Inspection and replacement criteria for possible damage should be addressed in the manual for continued airworthiness. Bearings are especially susceptible to pitting and internal arcing.

(iv) Report DOT/FAA/CT-86/8, April 1987, Determination of Electrical Properties of Grounding, Bonding, and Fastening Techniques for Composite Materials, may assist the applicant.

(4) Fuel Systems. Refer to Report DOT/FAA/CT-83/3 referenced in paragraph AC 27.610a. For additional information on the lightning protection requirements for fuel systems for rotorcraft with a certification basis which includes Amendment 27-23 refer to paragraph AC 27.954.

AC 27.610A. § 27.610 (Amendment 27-37) LIGHTNING AND STATIC ELECTRICITY PROTECTION.

a. Explanation.

(1) The title of § 27.610 has been revised to include protection from static electricity.

(2) A new § 27.610(d) has been added that specifies requirements for electrical bonding and protection against lightning and static electricity.

b. Procedures. The procedures of paragraph AC 27.610 still apply. In addition, the following procedures apply.

(1) Lightning Protection.

(i) General. The rotorcraft structure should be provided with means to conduct lightning so that the rotorcraft and its occupants will not be endangered.

(ii) Rotors and Control Systems.

(A) It should be established that an adequate primary bonding path exists between the rotors and the airframe, such that a lightning strike on a rotor will not result in damage to or seizure of gearbox or swashplate bearings, control jacks, etc.

(B) Each hinge and bearing of rotor blades and control surfaces should either:

(1) Be of a type that is capable of withstanding a lightning discharge without damage or seizure leading to loss of function, or

(2) Be provided with at least one primary bonding conductor. Where bonding conductors are provided, they should be as flexible and short as possible and should be installed so that there is no danger of the conductor jamming the hinge or bearing, particularly if partially disrupted by a lightning strike.

(iii) External Non-metallic Parts.

(A) Where non-metallic parts are fitted externally to the rotorcraft (e.g., rotors, radomes, composite skin panels) and are subjected to lightning, they should be protected against the following risks:

(1) The disruption of the materials because of rapid expansion of gases within them (e.g., water vapor);

(2) The rapid build-up of pressure in voids or in the enclosure provided by the parts resulting in mechanical disruption of the parts themselves or of the structure enclosed by them;

(3) Fire caused by the ignition of the materials themselves or of the materials contained within the enclosures.

(B) Materials used for external non-metallic parts should have low water-absorption characteristics, should not occlude gases, and should be of high dielectric strength in order to encourage surface flashover rather than puncture.

(C) Rotors and other external parts of nonmetallic construction should be provided with effective lightning diverters and/or primary conductors, which are capable of safely carrying lightning discharges, unless it can be shown that damage due to lightning discharge will not endanger the rotorcraft or its occupants. Bonding straps/leads are not required for small gaps between metallic structure and diverters in non-conducting panels in order to comply with the lightning protection criteria.

However, an electrical bonding path may be required to achieve static electricity protection.

(D) In some cases (e.g., radomes and rotors), confirmatory tests may be required to check the adequacy of the lightning protection provided.

(2) Characteristics of Lightning Discharges. The data contained in FAA AC 20-53 should be used for the purpose of assessing the adequacy of lightning discharge protection of rotorcraft.

(3) Protection Against the Accumulation of Static Charges.

(i) General. All items, which by the accumulation and discharge of static charges may cause a danger of electrical shock, ignition of flammable vapors, or interference with essential equipment (e.g., radio communications and navigational aids) should be adequately bonded to the main aircraft grounding system.

(ii) Intermittent Contact. The design should ensure that random intermittent contact between metallic and/or metallized parts (such as could cause unwanted radio interference or degradation of the components due to sparking) will not occur.

(iii) High Pressure Refueling and Fuel Transfer. Where provision is made for high pressure refueling and/or high rates of fuel transfer, it should be established, by test, or by consultation with the appropriate fuel manufacturers, that dangerously high voltages will not be induced within the fuel system. If compliance with this requirement involves any restriction on the types of fuel to be used or on the use of additives, an appropriate operating limitation should be established under FAR 27.1501(a). The critical refueling rates are related to the rotorcraft refueling installations, and the designer should seek the advice of fuel suppliers on this problem.

(A) With standard refueling equipment and standard aircraft turbine fuels, voltages high enough to cause sparking may be induced between the surface of the fuel and metal parts of the tank at refueling rates above approximately 250 gal/min. These induced voltages may be increased by the presence of additives and contaminants (e.g., anti-corrosion inhibitors, lubricating oil, free water) and by splashing or spraying of the fuel in the tank.

(B) The static charge can be reduced as follows:

(1) By means taken in the refueling equipment such as increasing the diameter of refueling lines and designing filters to give the minimum of electrostatic charging, or

(2) By changing the electrical properties of the fuel by the use of anti-static additives and thus reducing the accumulation of static charge in the tank to a negligible amount.

(4) Primary and Secondary Bonding Paths.

(i) Primary bonding paths are those paths that are required to carry lightning discharge currents. These paths should be of as low an electrical impedance as is practicable. Secondary bonding paths are those paths provided for other forms of bonding.

(ii) Where additional conductors are required to provide or supplement the inherent primary bonding paths provided by the structure or equipment, the cross-sectional area of such primary conductors made from copper should be not less than $3mm^2$ except that, where a single conductor is likely to carry the whole discharge from an isolated section, the cross-sectional area should be not less than $6mm^2$. Aluminum primary conductors should have a cross-sectional area giving an equivalent surge carrying capacity.

(iii) Primary bonding paths should be used for—

(A) Connecting together the main grounding points of separable major components which may carry lightning discharges,

(B) Connecting engines to the main aircraft ground,

(C) Connecting to the main aircraft ground all metal parts presenting a surface on or outside of the external surface of the rotorcraft, and

(D) Conductors and lightning diverters on external non-metallic parts.

(iv) Where additional conductors are required to provide or supplement the inherent secondary bonding paths provided by the structure or equipment, the cross-sectional area of such secondary conductors made from copper should be not less than $1mm^2$.

(5) Resistance and Continuity Measurements. Measurements should be made to determine the efficacy of the bonding and connection between at least the following:

(i) Primary Bonding Paths.

(A) The extremities of the fixed portions of the rotorcraft and such fixed external panels and components where the method of construction and/or assembly leads to doubt as to the repeatability of the bond, e.g., removable panels.

(B) The engines and the main aircraft ground.

(C) External movable metal surfaces or components and the main aircraft ground.

(D) The bonding conductors of external non-metallic parts and the main aircraft ground.

(E) Internal components for which a primary bond is specified and the main aircraft ground.

(ii) Secondary Bonding Paths.

(A) Metallic parts, normally in contact with flammable fluids, and the main aircraft ground.

(B) Isolated conducting parts subject to appreciable electrostatic charging and the main aircraft ground.

(C) Electrical panels and other equipment accessible to the occupants of the rotorcraft and the main aircraft ground.

(D) Grounding connections that normally carry the main electrical supply and the main electrical return. The test on these connections should be such as to ensure that the connections can carry, without risk of fire or damage to the bond, or excessive volt drop, such continuous normal currents and intermittent fault currents as are applicable.

(E) Electrical and electronic equipment and the main earth, where applicable, and as specified by the rotorcraft manufacturer.

(F) Static dischargers and the main rotorcraft structure.

AC 27.611. <u>§ 27.611 INSPECTION PROVISIONS</u>.

a. <u>Explanation</u>. The rotorcraft must have access panels or openings that will allow for proper maintenance and/or adjustment of the rotorcraft systems.

(1) The rule states: “There must be means to allow close examination of each part that requires recurring inspection, adjustment for proper alignment and functioning, or lubrication.”

(2) “Structural” or load-carrying access panels may be used to comply with the rule. Structural panels should have stencils or permanent labels (§ 27.1541(a)(2)) stating the panels must be installed prior to ground or flight operation.

(3) Holes or “nonstructural” access panels should be used whenever possible.

b. Procedures.

(1) The determination of compliance can be accomplished in conjunction with the following activities:

(i) Reviewing type design drawings.

(ii) Conformity inspections accomplished during certification testing.

(iii) Be evaluated during the control system proof and operation tests (§§ 27.681 and 27.683).

(iv) During type inspection tests and functioning and reliability testing.

(2) Equipment requiring frequent inspections (at less than 25-hour intervals), lubrication, or adjustments should be accessible through “nonstructural” doors. Areas or items requiring daily attention should be accessible through “nonstructural” doors since properly rated maintenance personnel are required to “open and close” or reinstall structural panels, and special design features, such as multiple pins and latches, are generally necessary for structural doors.

AC 27.613. § 27.613 (Amendment 27-16) MATERIAL STRENGTH PROPERTIES AND DESIGN VALUES.

a. Explanation. The rule requires the use of materials that have a known minimum strength value. The structure must not be understrength and must be designed to minimize fatigue failure.

(1) Material design values in certain specified documents may be used. The FAA/AUTHORITY may approve other material design values thus allowing the applicant greater flexibility in selection of materials by proving their strength properties and design values as stated in § 27.613(d).

(2) Other materials that may be new or are not included in the specified documents may be tested and design values established as provided by § 27.613(a) and (d).

(3) Section 27.613(d) requires the selection of materials that will retain design values and properties in the type of service environment and for the length of service time intended for the structure.

(4) Section 27.613(c) is an objective rule concerning minimizing fatigue failures and § 27.571 concerns quantitative fatigue substantiation requirements.

b. Procedures.

(1) The properties and design values in the documents noted in the rule may be used.

(2) MIL-HDBK-5, Metallic Materials and Elements for Flight Vehicle Structure, Chapter 9, contains procedures for establishing design values of additional materials. Uniform means of presenting the data are also contained in this chapter.

(3) Design values and properties must include effects of the service environment and service time. An example is exposure at elevated temperatures on the ultimate tensile strength of 7079-T6 aluminum alloys as found in figure 3.7.4.1.1(c) of MIL-HDBK-5.

(4) The probability of disastrous fatigue failures must be minimized. This may be accomplished by using design features usually identified as fail-safe features, such as the following:

(i) Selection of materials with stress levels to provide a controlled slow rate of crack propagation combined with high residual strength after initiation of cracks (lightly loaded structures).

(ii) Use of multipath construction and the provision of crack stoppers to limit the growth of cracks.

(iii) Use of composite (multielement) duplicate structures so that a fatigue crack or failure occurring in one element of the composite (multielement) member will be confined to that element and the remaining structure will still possess adequate load-carrying ability.

(iv) Use of backup structure wherein one member carries all the load, with a second member available and capable of assuming the extra load if the primary member fails.

(v) Design to permit detection of cracks including the use of crack detection systems, in all critical structural elements before the cracks can become dangerous or result in appreciable strength loss, and to permit replacement or repair.

(5) Acceptable standards for pressurized containers or cylinders, such as cylinders of nitrogen, used to inflate emergency floats may be found in 49 CFR 178, Subpart C, §§ 178.36 through 178.68. Specifically, § 178.44 concerns standards for steel cylinders used in aircraft that are subjected to at least 900 PSI service pressure. This standard includes strength, test, material property, inspection, quality, design features, identification, and inspection report requirements. As an example, § 178.44-14, entitled “Hydrostatic Test,” requires that each cylinder must be (proof) tested to at least 5/3 times the service pressure. Section 178.44-16, entitled “Burst

Test," also states that one cylinder taken at random out of each lot of cylinders shall be hydrostatically tested to destruction.

(6) Other design criteria may be developed and approved under the provisions of FAR Part 27 as a unique part of the aircraft type design.

AC 27.613A. § 27.613 (Amendment 27-26) MATERIAL STRENGTH PROPERTIES AND DESIGN VALUES.

a. Explanation. Amendment 27-26 added explicit probability standards criteria to § 27.613(b). This amendment also provided for testing or proving the strength of selected individual items rather than conducting coupon tests to develop generic material strength properties that would be used for design purposes.

b. Procedures. The basic procedures of paragraph AC 27.613 still apply, except:

(1) Probability criteria common with MIL-HDBK-5D are explicitly allowed to determine strengths for metallic materials whose data are not available in MIL-HDBK-5D. These specific probability criteria should be used in conjunction with MIL-HDBK-17B whenever determining material strength properties for non-metallics. (Also, reference paragraph AC 27 MG 8).

(2) New § 27.613(e) provides for the premium selection of materials. The premium selection of materials method uses a specimen from each individual item (part) to determine its properties before its use is allowed. This is a highly specialized and possibly costly method which applies only to parts that have areas available from which specimens can be obtained without destroying the part. The rotorcraft type design data of those parts made from premium selection should have the necessary information, such as a minimum allowable strength, on the drawing.

AC 27.619. § 27.619 SPECIAL FACTORS.

a. Explanation.

(1) This is a general rule to complement other rules. Special factors are employed for reasons cited in the rule to ensure an airworthy aircraft structure. The 1.5 ultimate load factor in § 27.303 is multiplied by a special factor as specified in the rule.

(2) Specific factors are prescribed for castings and fittings in §§ 27.621 and 27.625, respectively. Factors may be prescribed for bearings with free clearance as stated in § 27.623. In addition, any other factor may be prescribed "to ensure that the probability of the part being understrength because of the uncertainties specified in § 27.619(a) is extremely remote."

b. Procedures.

(1) One example of fitting factor use follows:

1,000-pound limit design load x 1.15 fitting factor x 1.5 ultimate load factor equals 1,725-pound ultimate design load.

(2) Other specific factors may be similarly applied. Refer to §§ 27.623 and 27.625.

(3) Other factors may be imposed as cited in the rule. Advisory Circular 20-107, paragraphs 5 and 6, are examples of requiring tests of component and subcomponent structure to account for variability of strength and stiffness of composite structures. Factors appropriate for the particular design are obtained and used in substantiation of the composite structure.

(4) The rule complements §§ 27.603 and 27.613. Regardless of the rule invoked, the variability of the material and/or assembly properties should be accounted for.

AC 27.621. § 27.621 CASTING FACTORS.

a. Explanation. Casting design, test, and inspection criteria are included in this rule for critical and noncritical structural castings. Hydraulic or other fluid containers are not subjected to “structural loads” but are subject to pressure testing as a part of hydraulic or other flight systems. Critical and noncritical castings are defined in the rule.

(1) Factors, tests, and inspections are specified for structural castings. Additional factors, tests, and inspections may be applied, as prescribed by § 27.603, § 27.605, or § 27.613, for foundry quality control.

(2) For castings that have surfaces subject to bearing structural design loads, the casting factor need not exceed 1.25 with respect to bearing stresses and need not be used with respect to the bearing surfaces if the bearing factor of § 27.623 exceeds the applicable casting factor.

(3) Critical castings must have a casting factor not less than 1.25 and must receive 100 percent inspection as specified including radiographic inspection. Static test requirements are also specified in addition to the inspection requirements.

(4) Noncritical structural castings may have a casting factor as small as 1.0 with attendant increased inspection and quality control requirements. Use of larger casting factors reduces the inspection and quality control requirements.

(5) Structural static and fatigue substantiation, by test or analysis, is still required in addition to any casting static tests required by this rule.

b. Procedures.

(1) The rotorcraft castings should be classified as critical or noncritical or nonstructural or fluid container as soon as possible in the certification program. The applicant should then be prepared to propose the tests required for certification.

(2) The casting factors and associated inspection requirements dictated by § 27.621(c) and (d) are shown in the following chart:

INSPECTION REQUIREMENTS

	CRITICAL CASTINGS <(2)>		NONCRITICAL CASTINGS <(3)>	
CASTING FACTOR RANGE <(1)>	FAA REQUIRE-MENT 27.621(c)	OTHER CLASSIFICATION	FAA REQUIRE-MENT 27.621(d)	OTHER CLASSIFICATION
2.01 OR GREATER	<(7)>		<(4)>	
1.50 TO 2.00	<(7)>		<(5)>	
1.250 TO 1.499	<(7)> <(8)>		<(6)>	
1.00 TO 1.249	NOT ALLOWED	NOT ALLOWED	<(7)> <(8)> <(9)>	

<(1)> Ultimate load = Casting factor x 1.5 x limit load. CAUTION: For casting factor range of 1.25 to 1.5 see yield test requirements of NOTE <(8)>. The mechanical properties to be used for analysis shall be based on the tabulated values of MIL-HDBK-5 or other approved sources, ref. § 27.613.

<(2)> Critical castings are those castings whose failure would preclude continued safe flight and landing or result in injury to any occupant, ref. § 27.621(c).

<(3)> Noncritical castings are castings other than those defined by NOTE <(2)>.

<(4)> Each casting shall receive 100 percent visual inspection.

<(5)> Each casting shall receive 100 percent visual and reduced magnetic particle or penetrant inspection or approved equivalent methods.

<(6)> Each casting shall receive 100 percent visual and reduced radiographic and magnetic particle or penetrant inspection or approved equivalent methods.

<(7)> Each casting shall receive 100 percent inspection by visual, radiographic, and magnetic particle or penetrant inspections or approved equivalent methods.

<(8)> Three sample castings shall be static tested and shown to meet:

No failure at 1.25 x 1.5 x limit load, and
no yielding at 1.15 x limit load.

<(9)> Castings shall be procured to a specification that guarantees the mechanical properties of the material in the casting and provides demonstration of these properties by test of coupons cut from the castings on a sampling basis.

This chart may be included in the casting test proposal report. It is recommended that the applicant include in the test proposal report additional information such as shown in paragraph AC 27.621b(3).

(3) The casting test report may include the following sections or items in a Part I of the report. The report may also have a Part II that contains the test results as shown in the following example report. The following sections are a recommended format content of the report. Appropriate changes should be made as desired to accommodate the applicant's system.

EXAMPLE OF REPORT
INTRODUCTION

This report presents the proposal for the static test of the castings used on the Model XYZ. The castings will be tested in compliance with Federal Aviation Regulations § 27.621. The purpose of this test is to substantiate the structural strength of the castings used on the Model XYZ. Part II of this report, which will be published after static tests have been completed, will present test results.

All test specimens will be selected as radiographic standards of acceptance for the particular castings (see Test Specimen). Additional information on selecting the specific castings may be included in the test specimen section of this report.

Load sheets giving direction and magnitude of loads for each of the castings are presented in numerical order by part number at the end of this report. The test loads and design criteria for the castings are discussed in detail in the test loads section of this report.

The test loads will be applied and reacted using mating aircraft parts or special fixtures which simulate the mating parts. The methods and apparatus to be used for the static tests of the castings are discussed in the apparatus and method section of this report.

Testing will be conducted in . . . (location).

TEST SPECIMEN

The castings which will be tested are listed in numerical order in figure AC 27.621-2. Those castings which, after structural analysis, show less than a 1.5 casting factor will be tested. All directions are given with reference to a forward facing position in the rotorcraft.

On the basis of a radiographic examination, the three castings which are of the poorest acceptable quality in the first production lot of castings will be selected as test specimens. The poorest of the three castings will be selected as the initial test casting and its radiograph or ASTM standard will be used as the standard for accepting future castings of the particular part unless later standards are approved. Three castings must be tested for each critical condition for each part.

Conformity Inspection

Each machined casting will be subjected to an FAA/AUTHORITY conformity inspection prior to testing to determine compliance with the type design drawings. A conformity report for each casting may be incorporated in Part II, Test Results, of this report.

The test specimen will be permanently marked or defaced after testing to preclude its use on a rotorcraft.

See figure AC 27.621-2 for an example of a convenient means of listing castings.

TEST LOAD

The test load(s) to be applied to each casting represents the critical loading condition(s) for that casting. The critical conditions on each of the castings were determined by the design criteria and substantiating data approved by the FAA/AUTHORITY.

The design criteria for all of the castings to be static tested may fall into one of two categories. The load factors and structural acceptability requirements for each category are discussed below. Casting factors that are included on the load sheets of each part do not apply in the discussion below. (See paragraph AC 27.621b(2) for casting factors.)

Castings Designed to Limit Load Conditions

A structural analysis of each test casting showing the critical design limit load conditions is given in the data (reference report number here). The load factors for the static test of the castings are as follows:

1.15 x design limit load = design yield load
1.50 x design limit load = design ultimate load

Castings Designed Only to Crash Landing Conditions

The castings in this category were designed using a crash landing load factor for the design ultimate load. The design yield load criteria of 1.15 x limit load need not apply to these castings. The test loads for these castings may be given in terms of design ultimate load on the individual casting load sheets shown in Part I of this report.

Test Procedures

Depending on the results of the initial static test of each casting, the following procedure will be used.

a. If in the initial test of critical castings the casting is found to have a casting factor of 1.5 (1.5 x design ultimate load), the casting will be considered acceptable and no further tests will be conducted.

b. If in the initial test(s) the critical casting is found to have a casting factor less than 1.5 but equal to or greater than 1.25, two additional castings will be tested for each critical load condition. Each must also show a minimum casting factor of 1.25.

c. If in the initial test, or in one of two additional tests, a casting shows a casting factor less than 1.25 times design ultimate or yields prior to reaching 1.15 times design limit load, the casting will be redesigned and retested. The yield criteria are also applicable to the first two procedures with the exception of critical castings designed to crash landing conditions.

TEST APPARATUS AND METHOD

The Model XYZ casting static tests will be conducted using fixtures designed to simulate the installation of the castings in the aircraft. Where practical, mating aircraft parts will be used to apply and react test loads. When practical, the static tests will be conducted with mating castings assembled when the critical loads for the mating castings are compatible; otherwise, fixtures simulating the mating parts may be designed and fabricated for the tests. Assembly hardware used to mount test castings will be the same as hardware used on the rotorcraft. All bolt torques and other assembly notes will conform to the type design assembly instructions.

The tests will be conducted using calibrated load measuring devices such as hydraulic cylinders and pressure gages, load cells, strain gage bridges, or dead weights.

Deflections of the casting may be measured using graduated dial indicators or scales in all tests. The deflection indicators will be based or mounted on the casting and will measure casting deflection only when possible; otherwise, the indicators will be based on the fixture and measure deflection of the casting relative to the fixture. Deflection readings will be made at 20 percent increments of limit load through 100 percent of limit load and at 115 percent of limit load. These increments may be changed if necessary. Permanent deformation readings will be made after relieving 115 percent and 150 percent of limit load.

See figure AC 27.621-1 as an example of a load sheet.

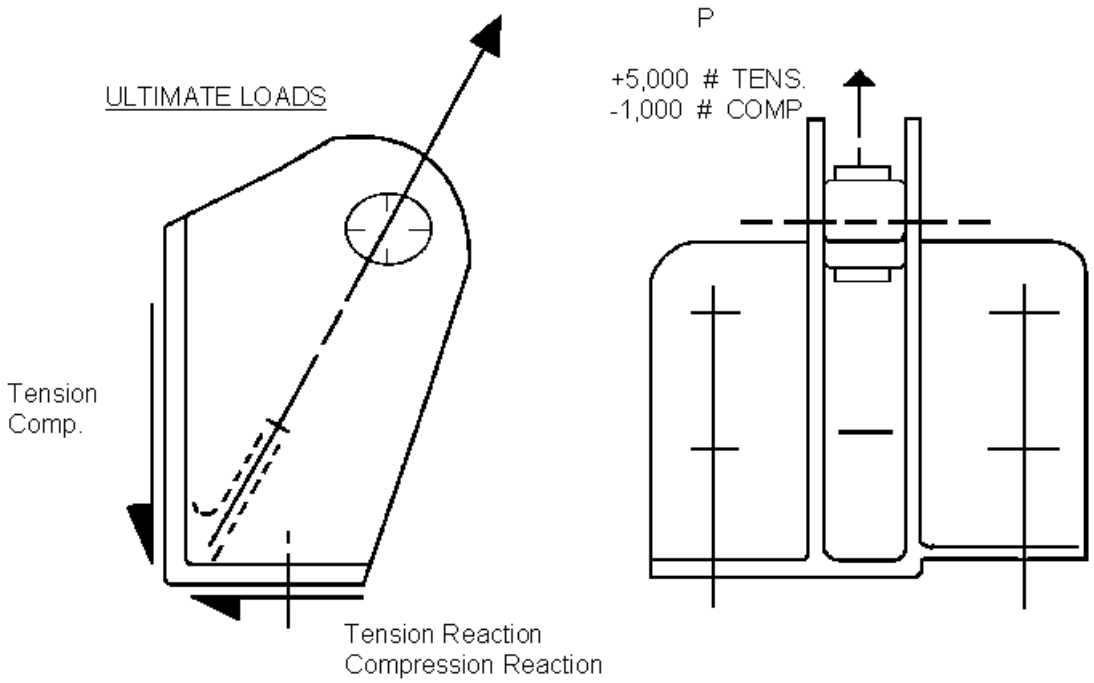

FIGURE AC 27.621-1
EXAMPLE OF CASTING LOAD SHEET
RETRACT ACTUATOR SUPPORT - LANDING GEAR

Include spherical bearing with clamped-up bolt and a link in the test setup to confirm the stability. Loads are based on a jam condition with actuator operating at 1,700 PSI pressure maximum.

A 1.25 casting factor is included in these loads.

These loads were derived from data in approved structural loads and analysis report.

END OF SAMPLE REPORT

(4) The format of the previous guidance material may be changed to accommodate the applicant's method of data presentation.

(5) Nonstructural castings may be tested and included in the test report.

(6) Cast fluid containers, including hydraulic fluid containers, may be tested as prescribed in other rules of FAR Part 27 and a test proposal and test results report may be included in the casting test report, or an appropriate report may be referenced for convenience. We recommend use of one report to contain test data or reference to test data for all castings used on the rotorcraft.

FIGURE AC 27.621-2 EXAMPLE

CASTINGS TO BE STATIC TESTED FOR MODEL XYZ

CASTING NO.	MACHINE OR ASSY. NO.	NAME AND LOCATION	MATERIAL	REF. LOAD SHEET FIG. NO.
		Base Assembly, Pilot's Collective Column		

AC 27.623. § 27.623 BEARING FACTORS.

a. Explanation.

(1) The rule requires use of a minimum bearing factor in free fit joints to account for effects of typical relative motion. A minimum value is not specified in the rule. The factor, appropriate for the application, is applied to the ultimate bearing strength of the softest material used as a bearing. A definition of free fit (clearance fit) is noted in paragraph AC 27.623b(7) below.

(2) A bearing factor, appropriate for the application, shall be used unless a larger factor is used.

(3) For reference, specific bearing factors are contained in § 29.685(e) for transport rotorcraft control system joints subject to angular rotation. These factors are applied to the ultimate bearing strength of the softest material used as a bearing in the control system. Control systems ball, roller, or needle bearings are covered by § 29.685(f) for transport rotorcraft.

(4) MIL-HDBK-5D, paragraph 8.3, refers to design standards for plan or journal bearings or bushings. These standards are found in Air Force Systems Command Design Handbook AFSC DH-2-1, Airframe, Chapters 3 and 6.

b. Procedures.

(1) Control system joint bearings are discussed under § 27.685 and paragraph AC 27.685A, but the bearing factors are noted here for convenience. For transport rotorcraft control systems, § 29.685(e) requires a 2.0 bearing factor for cable systems and a 3.33 bearing factor for push-pull systems other than ball and roller bearing systems. The manufacturer's static, non-Brinell rating of ball and roller bearings should not be exceeded. Use of this for normal category rotorcraft is recommended.

(2) A landing gear pivot, grease-lubricated, plain bearing is one example of a free fit subject to pounding or vibration. A bearing factor of 2.0 may be used or another factor may be proven for a grease-lubricated plain bearing or bushing to account for the anticipated higher loads caused by pounding or vibration. See paragraph AC 27.623b(6) for recommendations on ball or roller bearings.

(3) A typical engine mount bolt installation with a plain bearing having a free or loose fit (not interference fit) is another example of a sleeve bearing application subject to a design bearing factor. As an EXAMPLE OR ILLUSTRATION, a bearing factor of 1.85 may be applied to the design loads on the softest material reacting the bearing loads. A different but appropriate factor will be acceptable. The design limit load may be calculated for the example of a 0.312-inch-diameter bolt in a 2-inch-long bearing. The bearing projected area is 0.312 x 2 = 0.624-square-inches. The design limit load is 3,000 pounds. The design limit bearing stress is 3,000 pounds/0.624-square-inch x

1.85 = 8,894 PSI. If a free or loose fit is not used; i.e., tighter than free fit, a bearing factor is not required. See paragraph AC 27.623a(4) for bearing factors.

(4) Military standard part specifications, MS 21240, “Bearing, Sleeve Plain, TFE Lined,” and MS 21241, “Flanged Bearing, Sleeve Plain, TFE Lined,” contain allowable load ratings, static and dynamic, that apply to the particular use of the bearing. An appropriate bearing factor should be applied to the static rating. Military Specification (MIL-B-8943A, Amendment 3, “Bearing, Sleeve, Plain, and Flanged, TFE Lined” (temperature range -65° F to +250° F) shows that MS 21240 and MS 21241 sleeve bearings have been superseded by MS 1934/1 and MS 81934/2 sleeve bearings, respectively. Military Specification MIL-B-81934, Amendment 2, “Bearings, Sleeve, Plain and Flanged, Self-Lubricating,” uses TFE liners. These bearings are intended for use in a temperature range from -65° F to +325° F. Whenever a sleeve bearing is used, an appropriate bearing factor should be applied to the static rating that is contained in the specification or standard. Other sleeve bearings are contained in standards NAS 72 through NAS 77, NAS 537, and NAS 538. The installation design information is only contained in standards NAS 72 through NAS 74. These types of plain sleeve bearings are designed for clamping to the shaft or bolt with relative motion occurring on the bearing outside diameter. An appropriate bearing factor is required for the application.

(5) The minimum fitting factor 1.15, specified by § 27.625, must be applied as specified to account for load distribution at the fitting. This fitting factor need not apply to plain or journal “bearings” whose “bearing factor” exceeds 1.15.

(6) For airframe and landing gear structural joints, the manufacturer’s static, non-Brinell rating of ball and roller bearings should not be exceeded. ABEC Class 1 bearings or better quality bearings may be used in airframe structural joints and landing gear; ABEC Class 3, 5, or 7 bearings should be used in rotor pivot joints. The non-Brinell rating includes consideration of the bearing factor, and no other bearing factor is necessary.

(7) A free fit was described in American Standards Association (ASA) Standard B4a-1925. The “free fit” clearances and tolerances of this old standard are now called Class RC6, Medium Running Fit, in ASA Standard B4.1, 1955. As an illustration using these standards, a 1-inch diameter shaft and a plain sleeve bearing would have a clearance ranging from 0.0014 to 0.0040 inch.

AC 27.625. <u>§ 27.625 FITTING FACTORS</u>.

a. <u>Explanation</u>. A 1.15 factor is specified to ensure that the calculated load and stress distribution within any fitting is conservative. Application of the factor is excluded or is an exception as stated in the rule.

b. <u>Procedures</u>.

(1) The factor may be applied to the calculated load or stress for the fitting.

(2) The structural design substantiating data should include the fitting factor and where applicable should include, but not be limited to, the rotor system. The rotor system includes the rotor blade attachments, rotor head and hubs, and boosted control system elements. Other typical areas that may be considered are tail rotor gearbox attachment, tailboom to fuselage fittings, transmission pylon attachments, and landing gear attachment to the rotorcraft.

(3) The fitting factor is not required in the following applications:

(i) Joints such as continuous joints in metal plating, welded joints and scarf joints in wood.

(ii) Elements proven by limit or ultimate load tests such as nonboosted control system parts.

(iii) Elements for which a larger load factor is used such as a casting factor, a 1.33 retention factor when required for seats and safety belts, a fatigue factor, bearing factor or special factor greater than 1.15, crash load factors that are the only design case, and crash load factors that exceed limit load factors x 1.5 x 1.15.

(iv) Elements for which the failure mode does not affect safety of flight or occupant safety.

AC 27.625A § 27.625 (Amendment 27-35) FITTING FACTORS.

a. Explanation. Amendment 27-35 added § 27.625(d) that requires a 1.33 factor applied to the emergency landing loads of § 27.561(b)(3) for the substantiation of attachments of each seat, berth and litter to the structure and each safety belt or harness to the seat, litter, or structure.

b. Procedures. All of the advisory material pertaining to this section remains in effect with the following additions.

(1) A fitting factor of 1.33 must be applied to the emergency landing loads of § 27.561(b)(3) when evaluating the attachments of the seat, berth, and litter to the structure, and each safety belt and harness attachment to the seat, berth, litter, or structure.

(2) The 1.33 factor is required whether analysis or test is used.

AC 27.629. § 27.629 FLUTTER.

a. Explanation. The rule requires that the rotorcraft “be free from flutter under each appropriate speed and power condition.”

b. Procedures. Freedom from flutter is to be shown for the entire rotorcraft with special attention to the blades, fins, and stabilizers.

(1) Flutter is defined as an aeroelastic instability resulting primarily from coupling of flap and pitch bending modes.

(2) Freedom from flutter may be shown by analysis or by appropriately instrumented flight flutter tests.

(3) The flight load survey proposal submitted for compliance with § 27.571 may also contain tests to fulfill compliance with § 27.629.

(4) Flight loads survey data or flight flutter test data should be reviewed to ensure that excessive oscillatory deflections of rotors or surfaces will not be encountered.

(5) Sensitivity analyses should be conducted to ensure that normal wear in the pitch change mechanisms of the main rotor blades and tail rotor blades does not reduce the effective stiffnesses sufficiently to cause flutter.

SUBPART D - DESIGN AND CONSTRUCTION

ROTORS

AC 27.653 § 27.653 (Amendment 27-2) PRESSURE VENTING AND DRAINAGE OF ROTOR BLADES.

a. Explanation. The rule requires each rotor blade to be provided with venting and drainage means (i.e., holes, etc.) or else the blade must be sealed and designed to withstand internal pressure.

b. Procedures. Although the rule provides for venting and drainage features, recently certificated blades have been designed to be sealed and to sustain the "maximum pressure differentials expected in service." For modern blade designs, the internal pressure buildup due to environmental effects and centrifugal acceleration effects (near the tip) can be readily sustained with moisture sealing accomplished. The use of sealed blades is highly advantageous and recommended because of the possibility for severe corrosion damage resulting from trapped moisture and because of the difficulty in finding internal corrosion damage by use of field level inspections.

AC 27.659 § 27.659 (Amendment 27-2) MASS BALANCE.

a. Explanation. The rule requires that mass balancing of rotors and blades be provided, as necessary, to prevent excessive vibration and flutter. Further, the rule requires structural substantiation of the mass balance installation.

b. Procedures.

(1) The weight, geometry, and location of rotor and blade mass balance devices are determined as the requirements of §§ 27.571 and 27.629 are met.

(2) The structural substantiation should show static strength to meet the maneuver and gust loads of §§ 27.337, 27.339, and 27.341. In addition, the main rotor loads of § 27.547(c) should be substantiated. The fatigue strength of the mass balance devices (including structural supports) should meet the requirements of § 27.571.

(3) In addition to the appropriate strength requirements, some recent designs have included features which trap the balance weight inside a limited area even if the primary attachment means (adhesive, bolts, etc.) fail. This type of design feature is recommended because of the severe loading environment to which balance devices are subjected.

AC 27.661 § 27.661 (through Amendment 29-2) ROTOR BLADE CLEARANCE.

a. Explanation.

(1) This paragraph discusses the regulatory requirement contained in § 27.661. That requirement is that there must be enough clearance between the rotor blades (main and tail rotor blades) and other parts of the structure to prevent the blades from striking any part of the structure during any operating condition.

(2) In the past, some rotorcraft that have been shown to comply with § 27.661 during the certification process have experienced subsequent accidents involving in-flight contact between the main rotor and airframe (rotor/airframe contact). Completion of developmental and TIA flight testing without a rotor/airframe contact incident has proven not to be adequate demonstration of compliance with § 27.661 in all cases.

(3) Historically, in-flight rotor/airframe contact accidents have occurred as a result of mast bumping, rotor stall, or excessive rotor flapping due to control manipulation. For some rotorcraft, a more thorough examination may be required to ensure adequate clearances.

b. Procedures. Testing should be conducted by the applicant, prior to FAA/AUTHORITY participation, to ensure that the rotorcraft is in compliance with § 27.661 in all areas of the envelope during all operational maneuvers expected throughout the life of the aircraft. The tests should be performed concurrently with performance, flight characteristics, and flight loads testing. Tests should include:

(1) A blade flapping survey to determine flapping angles/margins, blade bending, and blade clearance from the entire airframe. Data may be gathered from instrumented flapping hinges, instrumented blades, high-speed video from airframe mounted cameras, a chase aircraft, or other acceptable means.

(2) Determine that margin exists between the minimum rotor RPM encountered during testing for compliance with § 27.143(d) and the RPM (power off) at which analysis shows that the rotor will experience a significant stall. A significant stall condition may be defined by the rotor reaching an RPM from which normal operating RPM is unrecoverable due to drag on the main rotor blades or, a stall that results in excessive main rotor flapping. The rotor RPM decay rate under the critical conditions of weight, density altitude, minimum approved power-on rotor RPM must provide a margin between the minimum rotor speed achieved during demonstration of compliance with §§ 27.79 and 27.143(d) and the analytically derived rotor stall RPM for the same conditions. For example, the minimum rotor RPM resulting during H-V tests must allow for a margin above the rotor stall value to allow for variations that may occur during operational flying.

(3) During parts of the certification flight test program, frangible devices (wood dowels) or other means of measuring clearance, may be requested to confirm that the clearances shown in the drawings and verified during company flight tests are adequate in all operating conditions. Balsa wood dowels or styrofoam pads may be clamped to the aft part of the fuselage and cabin roof within the rotor arc. Such devices may be

especially helpful in determining clearance during autorotation and controllability testing under FAR 27.143. If such measuring devices are used, the type inspection report should contain a record of clearance found during the tests. During TIA flight testing, it is not necessary to precisely determine the clearance but only necessary to determine "enough clearance" as stated in the rule.

AC 27.663 § 27.663 (Amendment 27-2) GROUND RESONANCE PREVENTION MEANS.

a. Explanation.

(1) This rule, adopted in Amendment 27-2 and revised in Amendment 27-26 requires reliability and damping action investigation for the ground resonance prevention means. The probable range of variations in service, not just the allowable range, must be established and investigated as prescribed. This probable range includes operation on the ground, and other appropriate landing surfaces applicable to the rotorcraft design shall be considered. Quantitative test data are generally obtained in compliance with this rule, but analysis or tests may be used.

(2) Appropriate maintenance information should be included in the maintenance manual (also called instructions for continued airworthiness).

(3) Paragraph AC 27.241 of this document concerns demonstrating freedom from ground resonance during certain applicant and TIA verification evaluations or tests of the rotorcraft. Section 27.241 complements the requirements of § 27.663. As noted in paragraph AC 27.241 of this document, a specific requirement for a ground vibration survey was removed from CAR Part 6. However Section 27.663 was adopted by Amendment 27-2 to investigate possible sources of ground resonance and to assure the reliability of the ground resonance prevention means, i.e., dampers, if necessary, to preclude occurrence of ground resonance. The total rotorcraft system is evaluated under this rule.

(4) Viscous dampers have been used for many years to prevent ground resonance. Modern rotorcraft designs may also use elastomeric dampers and may use elastomeric bearings in the rotor head and rotor pylon attachment to the airframe. The rule also requires investigation of the probable range of variations of these dampers, whether viscous or elastomeric, and these bearings to preclude ground resonance.

(5) Ground resonance can occur due to flexibility in the rotor pylon restraint system as well as with landing gear flexibilities. See paragraph b(2) of this guidance section (AC 27.663) for an explanation. An analysis may be done to show the effect of the rotor pylon mount stiffness on ground resonance stability. If the analysis shows that rotor pylon mount stiffness could affect ground resonance, the evaluation should include variations in stiffness and damping of the rotor pylon restraints that may occur in service (reference “Ground Vibrations of Helicopters,” M.L. Deutsch, JAS, Vol. 13, No. 5, May 1946).

b. Procedures.

(1) The reliability of the means for preventing ground resonance may be substantiated as stated in the rule. An analysis report or a test proposal and subsequent test report may be used to show compliance. The probable ranges of damping restriction are an important part of the assessment. The test may be conducted in conjunction with the testing required by § 27.241. See paragraph AC 27.241.

(i) Analysis and tests may be used.

(ii) Reliable service history of identical or closely similar systems may be used. The materials and fluids used, clearance or fits, seals, and physical installation are important items to be evaluated and considered for “closely similar” systems.

(iii) Testing of the complete rotorcraft may be used to prove that malfunction of a single means or member of the damping system will not cause ground resonance. One method of demonstrating acceptable compliance is by removing all or most of the fluid from a damper and considering the allowable ranges of damping of the other parts of the rotorcraft damping system while operating the rotorcraft throughout the rotor speed range from start to maximum rotor speed. Investigation of elastomeric dampers may require innovative test procedures and preliminary discussions of these prior to preparation of a test proposal. The rotorcraft cyclic control should be displaced as noted in paragraph AC 27.241 of this document to assure that the possible rotorcraft resonance frequencies are excited. If vibrations are damped in all tests, the damping system is satisfactory. Each critical rotor damper and landing gear damper must simulate a malfunction to comply with the rule. The testing discussed, however, could be come very extensive if one were to attempt to test all combinations of all maintenance adjustments of all components which contribute to the prevention of ground resonance, while at the same time rendering each of the pertinent components ineffective in turn and then repeating all of the maintenance tolerance testing each time. Fortunately, rational analytical methods are available which will permit the evaluation of such combinations so that only the combinations with the least amount of margin used are physically tested.

(2) The pylon damper variation can affect ground resonance. The variations in stiffness and/or damping of pylon mounts should be evaluated except the pylon mounts on contemporary conventional rotorcraft may have little influence on “classical” ground resonance stability. The dynamics of the rotorcraft on its landing gear is generally established by the airframe properties and the landing gear properties under the influence of the rotor system, with the “pylon” having little or no effect. For air or flight resonance, the rotor generally couples with the rigid body modes of the fuselage. For a specific design, a relatively simple analysis may be used to show the effect of the pylon mount system stiffness on air and ground resonance stability, and if not important, variations in the system may be omitted from the test program.

(3) The probable ranges of damping must be established and investigated as prescribed and noted in paragraph AC 27.663(b). An approved test proposal and test results report should be used for complying with § 27.663(b). If wheel landing gear is used on the rotorcraft, the probable ranges of tire pressure or the lowest probable tire pressure should be stated in the test proposal and effects of the tire pressure investigated during the test. See paragraph AC 27.241, § 27.241, concerning tests and instrumentation of the test associated with complying with § 27.241. The instrumentation noted in paragraph AC 27.241 also applies to § 27.663(b).

(4) If the wheel landing gear is equipped with wheel brakes, the evaluation should include brakes “on” and “off.” The nose or tail wheel should be locked and unlocked if it swivels to evaluate any possible adverse effects of this feature.

(5) Any maintenance procedures should be included in the “recommended” part of that manual. See Appendix A, FAR Part 27.

AC 27.663A § 27.663 (Amendment 27-26) GROUND RESONANCE PREVENTION MEANS.

a. Explanation. Amendment 27-26 clarifies that analysis as well as tests may be used to show freedom from ground resonance after malfunction or failure of a single means of ground resonance prevention. This amendment primarily clarifies that the probable range of damping should be established as well as investigated.

b. Procedures. The procedures of paragraph AC 27.663 continue to apply with the addition of the need to document the establishment of the probable range of damping of ground resonance prevention means. Acceptable tire and oleo minimum and maximum pressures as well as other identified factors should be documented in maintenance instructions if necessary to maintain the desired characteristics.

SUBPART D - DESIGN AND CONSTRUCTION

CONTROL SYSTEMS

AC 27.671. § 27.671 CONTROL SYSTEMS --GENERAL.

a. Explanation.

(1) The rule requires basically that controls operate easily and smoothly and provide positive response of the rotorcraft from control input.

(2) In addition, the rule requires that incorrect assembly be prevented by special design features or special markings.

b. Procedures.

(1) Easy, smooth operations of controls are substantiated by the operations tests of § 27.683 and the FAA/AUTHORITY flight testing under TIA procedures. Positive response of the rotorcraft to control inputs is also evaluated during company flight testing and FAA/AUTHORITY TIA flight testing to the requirements of §§ 27.141 through 27.175.

(2) To meet the requirement that incorrect assembly be prevented, the preferred method is providing design features which make incorrect assembly impossible. Typical design features which can be used are different lug thicknesses, different member lengths, or significantly different configurations for each system component. In the event that incorrect assembly is physically possible (because of other considerations), the rule may be met by the use of permanent, obvious, and simple markings. Permanent (durable) decals or stencils may be used.

(3) Design features of the control systems are checked when reviewing the type design drawings. During the proof and operation tests of §§ 27.681 and 27.683, the controls should be thoroughly reviewed for possible incorrect assembly and for any required markings supplied for compliance with this standard.

AC 27.672. § 27.672 (Amendment 27-21) STABILITY AUGMENTATION, AUTOMATIC, AND POWER-OPERATED SYSTEMS.

a. Explanation.

(1) This rule requires that the pilot be made aware of stability augmentation, automatic, or power-operated system failures which could lead to an unsafe condition. It should be understood that this requirement applies to stability augmentation and supplementary controls and not the primary flight control system that is dealt with under § 27.695 and associated advisory material. Examples of clearly distinguishable

warnings include, but are not limited to, an obvious aircraft attitude change following the failure or an audio warning tone. A visual indication itself may not be adequate since detection of a visual warning would normally require special pilot attention. The use of devices such as stick pushers or shakers is not acceptable as a warning means since the automatic flight control systems (AFCS) may provide a hands-off capability or normal helicopter vibrations could mask a control shaker. However, this rule is not intended to eliminate the use of such devices for other purposes. Examples of automatic control systems other than a stability augmentation system would be a pitch axis actuator used for the purpose of demonstrating compliance with longitudinal static stability requirements or a fly-by-wire elevator. For control systems where a series actuator malfunction could degrade control authority, a means should be provided to the pilot to determine actuator alignment (see § 27.1329(b)).

(2) The corrective flight control input following a system failure should be in the logical direction. For example, a malfunction resulting in a nosedown pitch of the aircraft should require a corrective cyclic control input in the aft direction. The system deactivating means does not have to be located on the primary flight control grips; however, it should be easily accessible to the pilot. Consideration should be given to the consequences of inadvertent de-selection of the automatic stabilization system, especially if the deactivation control is mounted on a primary control grip. Malfunctions and subsequent recoveries must be shown throughout the operating envelope of the aircraft. In a case where control authority is decreased following a malfunction, a practical flight envelope must be defined wherein compliance with controllability and maneuverability requirements can be demonstrated. This practical flight envelope must be presented in the flight manual. Compliance with trim and stability characteristics is not required following a malfunction; however, a pilot workload assessment should be made to show that these characteristics are not impaired below that needed for continued needed for continued safe flight and landing.

AC 27.673. § 27.673 (Amendment 27-21) PRIMARY FLIGHT CONTROL.

a. Explanation. This regulation basically defines primary flight controls as “those used by the pilot for immediate control of pitch, roll, yaw, and vertical motion of the rotorcraft.” This regulation was generated to clarify the application of § 27.1555 which requires markings for controls other than “primary flight controls or control(s) whose function is obvious.”

b. Procedures. The primary flight controls; i.e., cyclic stick, collective, and tail rotor pitch control pedals are excluded from the marking requirements of § 27.1555.

AC 27.674. § 27.674 (Amendment 27-26) INTERCONNECTED CONTROLS.

a. Explanation. A new § 27.674 is added by Amendment 27-26 which requires that the rotorcraft be capable of safe flight and landing after a malfunction, failure, or jam of any auxiliary interconnected control.

b. Procedures.

(1) Section 27.674 requires that the rotorcraft be shown to be capable of safe flight and landing after a malfunction, failure, or jam of an auxiliary control interconnected with a primary control. The section does not apply to interconnected primary controls; e.g., cyclic and collective controls.

(2) Examples of auxiliary controls covered by this section may include certain autopilot or stability augmentation or trim system components. Section 27.1309 methods may be used in determining failure effects of autopilot and stability augmentation “system” components. For components whose purposes are solely mechanical functions, the procedures associated with § 27.571 for components such as the main rotor may be used.

(3) If an engine control could jam and result in a collective control jam, the controls should be designed to relieve that connection.

AC 27.675. § 27.675 (Amendment 27-16) STOPS.

a. Explanation.

(1) Stops are required to prevent unrestrained movements of pilot/autopilot inputs from causing interferences or overloads.

(2) The rule requires that the stop must be located to not appreciably affect the control system range of travel due to wear, slackness, or take-up adjustments.

(3) Each stop is required to withstand loads corresponding to design conditions.

(4) In addition, each main rotor blade, if appropriate for the design, must have stops to limit its travel about its hinge points. For rotors with hingeless design, stops may be provided as appropriate to limit blade travel. Loads which result from the blade hitting the stops (during starting or stopping the rotor or during any large but allowable pilot control inputs such as autorotation cyclic flares or when subjected to ground gusts, etc.) shall not overload the stops nor any rotor component.

b. Procedures.

(1) Stops are generally provided in the cockpit area and near any controllable surface end of the control system (i.e., main rotor hub, tail rotor hub, and stabilizer activators). For systems with control coupling or series actuators, stops have been located farther downstream (away from the cockpit) to permit increased control output during malfunction (hardover) or extreme control position cases.

(2) Location of stops in close proximity to each end of a control system will allow the stop to provide its function most efficiently without undue deflections between the stop and its adjacent surface or its adjacent cockpit control lever or pedals. The location of stops close to the control lever or surface will help meet the requirement that the stop (and its function) not be appreciably affected by wear, slackness, or take-up adjustments. Consideration should be given to limiting the total amount of take-up adjustments of both the stop and the control systems to preclude a hazardous adjustment of the control surface range of travel by either normal or extreme take-up adjustment.

(3) Each stop is to be substantiated for critical design conditions from either pilot effort, aerodynamic loads, hydraulic loads, and other critical loads, as applicable. The stops can be substantiated for limit loads by the tests of § 27.681.

(4) The stops to limit the main rotor blade about its hinge points should be positioned to prevent the blades from striking any part of the structure, particularly during startup and shutdown operations. These stops should also limit the flapping of the static main rotor blades of the rotorcraft when they are subjected to ground gusts and rotor wash from nearby taxiing rotorcraft. Provisions should be made to prevent overloading the stops or the blade under conditions of ground gusts and rotor wash effects or during autorotational landing flares. The need for provisions to prevent possible overloads due to ground gusts and close taxiing by adjacent rotorcraft and by autorotational landing can be determined using the instrumented flight load survey aircraft by hover-taxiing another rotorcraft near the instrumented aircraft and by conducting autorotational landing flares with the instrumented aircraft. Substantiation for the final main rotor flapping stop design can be demonstrated by similar tests.

(5) If features of design are added to the main rotor stop assembly which activate certain portions of the stop assembly only on the ground to meet the requirement that the blade not hit the droop stop during any operation other than starting and stopping the rotor, such features of design must be substantiated to reliably operate by both ground tests and flight tests, as appropriate. Wear and rigging tolerances should be considered in these demonstration tests.

[The remainder of this page intentionally left blank.]

AC 27.679. § 27.679 CONTROL SYSTEM LOCKS.

a. Explanation. The rule requires that if control system locks are provided, means are necessary to prevent the rotorcraft from taking off with the locks engaged or, once airborne, to prevent the locks from engaging in flight.

b. Procedures. Three main approaches may be used to meet the requirements of this rule.

(1) The first approach is to provide a means to disengage the locks "automatically" as the pilot operates the controls. If this method is used, the means must disengage the locks in a manner so that they will not automatically re-engage during flight. The means may be physical removal of the locking device from close proximity to the control system interface, with deliberate crew action necessary to return the lock to the control system interface, or the means may be that the mechanism geometry or actions, or both, prevent the locking device from engaging in flight.

(2) The second approach is to provide locks that prevent take off with the locks engaged. Acceptable means are features which prevent engine startup or which restrict collective control operations to prevent sufficient lift for takeoff.

(3) The third approach is to provide a means that warns the pilot when a flight control lock system is engaged, such as through a non-cancelable warning message or through distinct control lock markings which are clearly visible to the pilot under all conditions (day and night).

(4) Unless it can be shown that the control locks cannot be inadvertently engaged (taking into account manufacturing tolerances and maladjustments), a means should be provided that allows, in flight, a single pilot to safely disengage any flight control lock. For example, the control lock design might include frangible fittings. Further, the RFM should describe the appropriate pilot corrective action needed to disengage the control lock system while in flight.

(5) The rotorcraft Instructions for Continued Airworthiness should include appropriate maintenance checks and procedures to be completed following modification (for example, via STC or field approval), maintenance, alignment, or adjustment that affects the flight control system locks.

[The remainder of this page intentionally left blank.]

AC 27.681. § 27.681 LIMIT LOAD STATIC TESTS.

a. Explanation.

(1) The rule requires static tests of the control system in showing compliance with limit load requirements.

(2) The tests are specified to include each fitting, pulley, and bracket of the control system being tested and to include the "most severe loading."

(3) Also, the rule requires that compliance with bearing factors (reference § 27.623) be shown by individual tests or by analyses for control system joints subject to motion.

b. Procedures.

(1) Compliance with the requirements of this rule is obtained by static tests conducted on either a static test airframe or on a prototype flying ship. In either case, conformity of the control system and related airframe is necessary to validate the tests.

(2) The rotor blades or aerodynamic surfaces may be used to react pilot effort loads through the control system, or they may be replaced with fixtures. If fixtures are used, they should be evaluated for geometric and stiffness efforts to ensure test validity.

(3) The loads to be applied during the limit load static tests are specified in §§ 27.395, 27.397, and 27.399. The loads are applicable to collective, cyclic, yaw, and rotor blade control systems as well as any other flight control systems provided by the design.

(4) Although Part 27 does not explicitly specify the bearing factors to be used in control system rotating joint tests or analyses, the factors of § 29.685 have been used in past programs. These factors are 3.33 for push-pull systems and 2.0 for cable systems for joints with plain bearings and manufacturers' ratings for ball and roller bearings.

[The remainder of this page intentionally left blank.]

[This page intentionally left blank.}

AC 27.683. § 27.683 OPERATION TESTS.

a. Explanation. The rule requires that the control system be free from jamming, excessive friction, and excessive deflection. An operational test is required in which specified loads are applied at the pilot controls and carried through an operating control system.

b. Procedures.

(1) Compliance with the requirements of this rule is obtained by use of a test setup similar to that used for the limit load tests of § 27.681, except the load reactions at the blades (or surfaces) must allow for movement of the blades (or surfaces) as the system is operated through its operating range.

(2) Fixtures are normally affixed to the surfaces (or replace the surfaces) to allow pulley arrangements which provide for movement under load. These fixtures should be evaluated to ensure that system loads up to limit will be applied during the full range of operations of each system.

(3) Each flight control system should be operated through its entire range under a light load and under limit load. As the controls are being operated, the system should be checked for jamming, excessive friction, and excessive deflection. Excessive deflection includes deflection sufficient to contact other systems or structure. Also, if under these limit load conditions the components deflect, the deflection would be considered excessive if there is permanent deformation of any component or supporting structure. Also any deflection that results in an uncorrected condition when the load is released, e.g., if a bellcrank is forced off-center or over-center during load and does not return to the normal position after load release is excessive deflection. Floor panels, wall panels, and other access panels may have to be removed to permit visual checks of the entire control system.

AC 27.685. § 27.685 (Amendment 27-11) CONTROL SYSTEM DETAILS.

a. Explanation. The rule requires that the control system be designed to prevent chafing, jamming, and interference from cargo, passengers, loose objects, or the freezing of moisture. Specifically, means are required in the cockpit to prevent the entry of foreign objects into places where they would jam the system, and means are required to prevent the slapping of cables or tubes against other parts.

b. Procedures.

(1) The geometry of the control system components and their installations are the primary control to prevent chafing, jamming, and interference. The control system from cockpit to surface should be checked for clearances both unloaded and loaded. The control system should be checked under load during both the limit load static tests (reference § 27.681) and the operational tests of § 27.683. Location of guides or

fairleads and pulleys may be used in cable systems to prevent chafing and interference with other structure. Generally, tubes should clear adjacent structure by location and design geometrical considerations. If supplemental means are provided to assure the tubes do not chafe or interfere, the means should be evaluated for possible jamming.

(2) Rubber (or other elastomeric) boots connected to both the cockpit control arm or shaft and to the floor are acceptable means to prevent the entry of foreign objects into underfloor areas where they may cause jamming of controls. Control systems should, in general, be routed around cargo compartments. If routing of the control system components is in or near cargo areas, the control system components should be protected by bulkheads, panels, or other enclosures which have sufficient strength and stiffness to prevent possible interference with the control system components when subjected to cargo loading and handling deflections.

(3) Control system details should be reviewed for possible moisture collection. Areas should drain free. Exposed or open control areas should drain free and areas of possible freezing moisture collection should not accumulate ice that would cause a jam of the controls. Simulated or actual ice collection on the controls may be used to prove questionable features. The areas to be considered for moisture collection include both external and internal areas where moisture may accumulate by direct impingement of water, entrapment of water particles, or condensation of moisture.

AC 27.685A. § 27.685 (Amendment 27-26) CONTROL SYSTEM DETAILS.

a. Explanation. Amendment 27-26 adds §§ 27.685(d), (e), and (f) for cable systems, control system joints, and bearings, which are compatible with the same pre-existing paragraphs of § 29.685 except cables of 3/32 inch diameter are allowed by this section rather than the minimum of 1/8 inch diameter required by § 29.685 for transport rotorcraft.

b. Procedures. All of the policy material pertaining to this section remains in effect. This material is supplemented with the following:

(1) The latest revisions of MIL-HDBK-5D do not explicitly give approved pulley-cable combinations, but appropriate MIL specifications are referenced in Chapter 8.3 of MIL-HDBK-5D for use in determining pulley-cable combinations and ratings.

(2) Adhere to the ratings, factors, and alignment as specified.

(3) Provide inspection means as specified for the control system.

(4) Close fitting pulley guards are required for cable systems.

AC 27.687. § 27.687 SPRING DEVICES.

a. Explanation.

(1) This standard for control systems ensures that springs and spring devices used to prevent flutter, control oscillations, or vibrations are either --

(i) Reliable (failure is extremely remote); or

(ii) The failure is not critical to the rotorcraft.

(2) Tests simulating service conditions are required in either instance.

b. Procedures.

(1) Springs and spring devices used in the control system, including balance springs, should be identified early in the certification program.

(2) Whenever a spring cannot be proven by observation or analysis that it is “not critical,” then ground or flight tests may be required.

(3) Springs that are critical to safe operation may be subject to fatigue substantiation to prove they are reliable for the operating conditions imposed in service.

(4) Springs used in conjunction with hydraulic actuator spool valves may be subject to the standards of § 27.695.

AC 27.691. § 27.691 AUTOROTATION CONTROL MECHANISM.

a. Explanation.

(1) Rotorcraft designs generally have a main rotor blade collective pitch control system that does not have detents or other devices to limit pitch control in the control midrange. Autogyro and other rotorcraft designs may include detents or other finite position control for collective pitch control. This rule requires that the control design allows rapid entry into autorotation after a power failure.

(2) Section 27.33 contains standards concerning establishment and control of the main rotor speed limits. The standard requires flight tests and demonstrations. The standard also concerns rotorcraft design features that are related to control of the main rotor speed limits.

(3) Other design requirements for control systems are contained in § 27.685.

b. Procedures.

(1) If high and low main rotor pitch stops are employed in the collective control and if the control may be rapidly moved from one limit to the other, compliance is shown.

(2) If detents or intermediate stops are employed, the pilot must be able to easily and readily override, disconnect, remove, or bypass the device to allow rapid autorotational entry prior to exceeding transient low speed rotor limits. An early assessment of the design may be accomplished by the flight test personnel with the evaluation completed in the Type Inspection Authorization (TIA) test program.

(3) It is acknowledged that modern rotorcraft designs may have an autorotational V_{NE} that is lower than "power-on" V_{NE} or normal cruise speed. For rotorcraft designs with this characteristic, the speed must be reduced after entry into autorotation. No relief from the rule is required since many phases of operation occur at speeds less than power-on V_{NE}. For example, a critical phase of flight occurs during takeoff. Rapid entry into autorotation is essential during this phase also.

(4) The features of the autorotational control mechanism and ability to control the rotor speed within the design limits for any rotorcraft will be evaluated as an integral part of the TIA test program.

AC 27.695. § 27.695 POWER BOOST AND POWER-OPERATED CONTROL SYSTEM.

a. Reference Regulations. The following sections of Part 27 are either incorporated in the provisions of § 27.695 or are otherwise applicable to power boost and power-operated control systems:

(1) Section 27.307 Proof of structure.

(2) Section 27.571 Fatigue evaluation of fight structure.

(3) Section 27.671 Control system.

(4) Section 27.681 Limit load static tests.

(5) Section 27.687 Spring devices.

(6) Section 27.685 Control system details.

(7) Section 27.861 Fire protection of structure controls and other parts.

(8) Section 27.863 Flammable fluid fire protection.

(9) Section 27.1301 Function and installation.

(10) Section 27.1309 Equipment, systems, and installations.

b. Explanation.

(1) The rule requires an alternate system if a power boost or power-operated control system is used.

(2) The alternate system must, in the event of any single failure in the power portion of the system, or in the event of failure of all engines:

(i) Be immediately available.

(ii) Allow continued safe flight and landing.

(3) The alternate system may be:

(i) A duplicate power portion of the system; or

(ii) A manually operated mechanical system.

(4) The power portion of the system includes:

(i) The power source (such as hydraulic pumps); and

(ii) Items such as valves, lines, and actuator.

(5) The failure of mechanical parts (such as piston rods and links) must be considered unless their failure is extremely improbable.

(6) The jamming of power cylinders must be considered unless their jamming is considered extremely improbable.

c. Procedures. It is assumed in the following discussion that the power boost or power-operated control system being utilized is a typical aircraft hydraulic system.

(1) The rule requires, without respect to the probability of failure, an alternate system for the power portion of the system. The power portion of the system, by example in the rule, includes hydraulic pumps, valves, lines, and actuators. It has also been interpreted to include seals, servo valves, and fittings.

(2) If a duplicate power portion of the system is used to meet the requirements of the rule, the requirements may be met by providing a dual independent hydraulic system, including the reservoirs, hydraulic pumps, regulators, connecting tubing, hoses, servo valves, servo-valve cylinder, and power actuator housings. There must be no

commonality in fluid-carrying components. A break in one system should not result in fluid loss in the remaining system.

(3) Dual actuators should be designed to ensure that any single failure in the duplicated portion of the system, such as a cracked housing, broken interconnecting input, or broken interconnecting output link, does not result in loss of total hydraulic system function.

(4) A manually operated mechanical system may be used as the alternate system to a single hydraulic system if, after the loss of the single hydraulic system, the pilot can control the rotorcraft without exceptional piloting skill and strength in any normal maneuver for a period of time as long as that required to effect a safe landing. The control forces should not exceed those specified in § 27.397 and flight characteristics should meet the requirements of §§ 27.141 (b) and (b)(3).

(5) The substantiation of the various system components should include consideration for operation in the normal and alternate system modes.

(6) The "extremely improbable" criteria noted in § 27.695(c) for failure of mechanical parts may be satisfied by performing component fatigue testing and establishing a service life through this technique.

(7) Fatigue substantiation of the control actuator is required under § 27.571 and should consider both the stresses imposed by flight loads and the stresses imposed by hydraulic pump pressure pulses. Flight loads factored in a conservative way may be an acceptable means to take into account both effects.

(8) The possibility of jamming of the power cylinder may be shown as "extremely remote" through a failure analysis that considers every possible system component failure such as, but not limited to, ruptured lines, pump failure, regulator failure, ruptured seals, clogged filters, jammed servo valves, broken interconnecting servo valve inputs, broken interconnecting output links, etc.

(9) Three acceptable means to meet the requirements of § 27.695(a)(2) could be as follows:

(i) Provide two transmission-driven hydraulic pumps, provided the pumps are driven by the transmission during all flight conditions including autorotation.

(ii) Use two electrically-driven hydraulic pumps if electrical power is available to drive the pumps with all engines failed. If this approach is used, the battery must be capable of running both pumps plus all other required equipment necessary for continued safe flight.

(iii) Use a single transmission-driven pump and an electrically driven pump.

SUBPART D - DESIGN AND CONSTRUCTION

LANDING GEAR

AC 27.723. § 27.723 SHOCK ABSORPTION TESTS.

a. Explanation.

(1) Limit and "reserve energy" drop tests are required as prescribed in §§ 27.725 and 27.727, respectively. These tests may be conducted on the complete rotorcraft or on units consisting of wheel, tire, and shock absorber in their proper relation. For rotorcraft with skid landing gear, the tests may be conducted on the complete rotorcraft or on a simulated fuselage with the complete skid landing gear system.

(2) The rotorcraft must be designed to limit load factors that equal or exceed the limit load factor substantiated by these drop tests. In practical application, the rotorcraft may be designed to a limit load factor, such as 2.8g. Thus, it is necessary that the limit landing load factor derived from the landing gear drop tests be equal to or less than 2.8g. If not, the rotorcraft must be redesigned for the higher load factor derived from the drop tests. It must be shown in accordance with § 27.723 that the limit load factors selected for design under § 27.473 will not be exceeded in landings with the limit descent velocity corresponding to the drop height specified in that section. In addition, reserve energy absorption capacity of the landing gear must be shown for a descent velocity of 1.22 times the limit descent velocity selected under § 27.473 by increasing the drop height to 1.5 times the "limit" drop height. The test requirements or procedures outlined in Part 27 for obtaining the landing load factors are empirical; however, these procedures are based on and supported by satisfactory experience.

(3) As stated in § 27.725(c), each landing gear unit should be tested in the attitude simulating the landing condition that is most critical from the standpoint of the energy to be absorbed by it. For wheel landing gear designs, the level landing or tail down landing and level landing with drag are generally the most critical attitude. A test of more than one attitude may be required to comply with the standard.

(4) Drop tests are required. If analytical methods and/or means are proposed by the applicant, the data presented for approval must be equal to or conservative with respect to that data obtained from physical drop tests. Section 21.21(b)(1) concerns "equivalency" determinations. Presenting an acceptable means of "equivalency" here would circumvent the necessary scrutiny of an analytical method or means and is also beyond the scope of this document.

b. Procedures. The test plan or proposal must be approved prior to official FAA/AUTHORITY tests unless satisfactory resolution of outstanding proposal or conformity inspection items can be accomplished after the test.

(1) The following headings would be a typical table of contents for the test proposal, and a generalized explanation of the contents that may be included under each of these headings for a wheel landing gear follows.

(i) Purpose. The regulations to which compliance is being shown by the drop tests should be identified (usually §§ 27.723, 27.725, and 27.727). Also, the rotorcraft landing gear, including the wheels and tires to be dropped, should be positively identified in the report by the manufacturer's or applicant's previously FAA/AUTHORITY-approved drawing, technical standard orders (TSO's), or other identifying FAA/AUTHORITY-approved data as applicable.

(ii) Description of test setup. This section should present a description of the test fuselage or jig, method of attaching landing gear to jig, and type of accelerometer to be used to measure load factors. Proof of calibration of accelerometer should be available. The accelerometer should be mounted at the aircraft CG if a free drop of the aircraft is used or as close as practical to the centerline of the main shock absorbing component of each landing gear (oleo, strut, etc.) if each gear is tested separately. The description of the test jig, including platforms on which the gears are to be dropped, should be defined by sketches in addition to the required mathematical calculations. This data should show that the landing gear will be at the proper attitude, relative to the platform, on impact for the particular landing condition. Drawings or other approved data from which the geometry is taken should be referenced in the proposal. The tire and oleo pressures at the time of the test should be specified. The method of measuring the deflection of the tire plus the vertical travel of the axle under impact should be described. This measurement may be accomplished by telescoping tubes attached to the point on the jig that would measure the total (tire and oleo) vertical deflection of the landing gear. Other vertical and horizontal deflections should be measured as required to determine if the landing gear has experienced permanent deformation after each drop test. The effect of surface roughness should be considered. Smooth surfaces tend to give maximum deflections where rough surfaces tend to restrict deflection and to result in maximum values of N_Z. Preliminary company drop tests (at less than limit drop height) may be used to determine the critical surface roughness, or engineering evaluations may be used (without tests) when the gear configurations are such that the critical surface condition can be analytically determined (or when the load factor is shown to be negligibly affected by surface roughness). NACA Report 1154, dated 1953, contains information that surface coefficients of friction may vary from 0.4 to 0.7. Skid landing gear standards, § 27.501(c), indicate an acceptable coefficient of friction is 0.5. A wheel landing gear design standard, § 27.479(b), indicates an acceptable coefficient of friction is 0.25. In the case of a small rotorcraft, the entire aircraft may be dropped. This may be accomplished by establishing pivot points at the main gear axles for the tail (or a point forward of the nose gear) drops and a pivot point at the tail (or nose gear) axle for the main gear drops. It is the responsibility of the applicant to distribute the aircraft inertia items, including added weight to get the proper effective drop weight (W_e) at the landing gear,

so that no local failures of the aircraft occur as a result of the limit or reserve energy drop tests.

(iii) Test data. Computations for the required drop height (h) and the effective drop weight (W_e) should be shown for each design level landing and tail down landing condition in compliance with §§ 27.479 and 27.481. The computations should be in accordance with § 27.725(a) for h and § 27.725(b) for W_e for the limit drop tests. W_e and h are computed in accordance with § 27.725 for the limit drop test and with § 27.727 for reserve energy drop test. The computation of the static weight on the gear being dropped (W_M, W_N, or W_T) and used in the computation of W_e should be shown. This static weight is defined as W_M, W_T, or W_N for the main gears, tail gear, or nose gear, respectively, in § 27.725(d). It should be shown that the critical CG and proposed certificated maximum landing weight have been used in the computation of W_M, W_T, or W_N. The computation of the slope of the platforms required for the inclined reaction conditions should be presented also.

(iv) Test results. The results of the test are based on the values of W_e, h, d, W, and L used and obtained for each drop test and the value of N_j obtained from the accelerometer. These results should be summarized, and the method of computing the aircraft limit inertia load factor should be shown for each drop in accordance with § 27.725(d). A print or copy of the film or other recording trace from the accelerometer, if not a direct readout type of accelerometer, should be included in the test results. Each critical condition should have several preliminary drops, as many times as required, to obtain reasonable correlation.

(2) Skid landing gear may be tested using similar procedures except a level landing attitude drop test is all that is required by § 27.501. The design load conditions specified in § 27.501(c) through (f) are derived from this level drop test condition.

(i) Section 27.501(a)(2) and (3), contain special considerations for skid landing gear.

(ii) Section 27.501(a)(2) specifies that structural yielding of elastic spring members under limit load is acceptable. This yielding or deformation is a means of absorbing the landing impact. For skid landing gear that uses oleo or other types of shock absorbers, the standard does not allow structural yielding under limit load. During the limit load and reserve energy (ultimate for skid landing gear with elastic spring numbers) drops, the yielding energy absorbing members will probably deform or yield. After a limit drop test, the gear may be used for a reserve energy drop at the discretion of the applicant, but a gear that has been subjected to a reserve energy drop should not be used unless it can be shown that no yielding has occurred in that gear.

(3) Wheel landing gear is tested in attitudes prescribed in paragraph AC 27.723a(3). Each unit, nose or main gear, is generally tested separately.

(4) Skid landing gear is tested in attitudes prescribed in paragraph AC 27.723a(3). Due to the construction of skid landing gear, the complete skid landing gear is tested as a unit. Thus, the level landing with drag condition is probably the critical attitude for the forward cross-tube and its attachments. The level landing condition is probably the critical attitude for the aft cross-tube and its attachments.

(5) An FAA/AUTHORITY or FAA/AUTHORITY designated or delegated person need only witness the drop tests for “record” or “compliance.” Preliminary or developmental drops do not require an FAA/AUTHORITY witness.

AC 27.725. § 27.725 LIMIT DROP TEST.

a. Explanation. Limit drop tests in the critical aircraft attitude or critical attitude of each gear are required for the landing gear. The drop height must be at least 8 inches, which equates to a 393-foot-per-minute (free fall) vertical descent speed. Rotor lift may be simulated, and an effective mass may be used in the drop test as prescribed.

b. Procedures. See paragraph AC 27.723, § 27.723.

AC 27.727. § 27.727 RESERVE ENERGY ABSORPTION DROP TEST.

a. Explanation.

(1) In addition to the limit drop tests, a reserve energy drop test is required. The landing gear must not collapse in this test to the extent that the fuselage impacts the ground. Fracture (to separation) of landing gear parts is considered collapse of the landing gear. This test is not an ultimate load drop test for the landing gear, except as specified in § 27.501(a)(3) for certain skid landing gear designs using elastic spring members.

(2) All other types of landing gear must be substantiated for design ultimate loads in addition to this reserve energy drop test.

(3) Shock absorbing devices, such as oleos, must not “bottom” during the reserve energy drop test. “Bottoming” occurs when displacement of the device no longer occurs with increasing load.

(4) Requirements for proof of the landing gear and airframe structure are found in §§ 27.305, 27.307, and 27.473.

b. Procedures. See paragraph AC 27.723, § 27.723.

AC 27.727A. § 27.727 (Amendment 27-26) RESERVE ENERGY ABSORPTION DROP TEST.

a. Explanation. Amendment 27-26 defines the word “collapse” as used in § 27.727(c). Collapse of the landing gear during reserve energy absorption drop tests occurs when:

(1) A member of the landing gear will not support the rotorcraft in the proper attitude; or,

(2) A landing gear member deforms sufficiently to allow the rotorcraft structure other than the landing gear and external accessories to impact the landing surface.

b. Procedures. The procedures of paragraph AC 27.727A continue to apply with the following supplemental guidance.

(1) The proper attitude for the rotorcraft after the reserve energy absorption drop test is an attitude which allows for permanent deformation of landing gear elements but provides for adequate egress from the rotorcraft. Refer to paragraph AC 27.807 for emergency exit standards that relate to attitudes after a crash, § 27.807(b)(2).

(2) External accessories that may not impact the level landing surface during drop testing (or equivalent gear deflections) include devices such as externally mounted fuel tanks or accessories likely to cause post-landing fires. Expendable accessories, such as cameras, loudspeakers, and search lights, may be damaged during landing gear deformations resulting from reserve energy drop tests if electrical connections are sufficiently protected to preclude electrical fires and the devices are not likely to penetrate a fuel compartment or occupied areas. The expendable accessories, if installed, should also be designed to not have “hard points” that would unacceptably damage the rotorcraft structure under landing impacts by penetration into the occupied areas or fuel tanks. Design features may be employed to preclude this penetration if possibly hazardous. The expendable accessories, if installed, should be designed with frangible fittings, frangible devices, or comparable design features. Also, these devices should be designed to not significantly alter the energy absorbing ability or design features of the landing gear.

AC 27.729. § 27.729 (Amendment 27-21) RETRACTING MECHANISM.

a. Explanation.

(1) This standard was added by Amendment 27-21.

(2) Structural substantiation is required for the gear, retracting mechanism, doors, gear supporting structure for landing loads, maneuvering, gusts, and yawing

flight condition loads. Design maximum airspeed for extension and retraction and for fully extended conditions are required conditions.

(3) An emergency means to extend the gear after failure of the retraction/extension system is required for all except solely manual mechanical systems.

(4) This regulation requires an indication to the pilot when the gear is secured in the extreme positions. This rule does not apply to rotorcraft that have fixed gear but does apply to amphibious rotorcraft with retractable gear.

(5) A “landing gear down” lock is required. An optional uplock may be used if it meets reliability requirements.

(6) A (ground) operation test should be conducted to ensure proper functioning of the system.

(7) Location and operation of the control lever or device must comply with § 27.777. This section includes identification of controls to prevent confusion and inadvertent operation. Amendment 27-21 added new § 27.779 for motion and effect of cockpit controls. Specifically, § 27.779(c) pertains to motion and effect of normal landing gear controls. Section 25.781 of Part 25 contains large airplane design requirements for motion, effect, and shape of cockpit controls and their knobs and should be consulted for further guidance.

(8) A landing gear warning is required as prescribed in § 27.729(g). Certain features are required. The landing gear shall be extended and locked.

b. Procedures.

(1) The design load factors and resulting loads should be derived from the design data. The landing gear, while retracted, operating, and extended, and its supporting structure should be substantiated for the critical aerodynamic and inertia loads. Yawed conditions should be considered. The specific conditions are noted in § 27.729(a)(1), (a)(2), and (a)(3).

(2) Wheel well doors, if installed, should be designed for the aerodynamic loads, including loads from yawing conditions (angles selected by the applicant) for airspeeds up to the design maximum landing gear extended speed. Aerodynamic effects on both open and closed doors must be considered in the door and door support substantiations. The applicant may choose to substantiate the rotorcraft for a “landing gear operating” and “extended” speed V_{LO} and V_{LE}, respectively, that is equal to the rotorcraft V_{NE}. This option will alleviate an airspeed “structural limitation” because of the landing gear design substantiation. Any airspeed “structural limitation” should be listed in the structural limitations part of the TIA.

(3) The required “downlock” should be checked during the operation test. The design drawing should be reviewed for compliance prior to conducting an operation test.

(4) If an optional “uplock” is installed, the landing gear should be extended during the operation test after simulation of the critical failure mode of the retraction system.

(5) An “operation” test plan or proposal submitted for compliance with § 27.729 should include the items noted in 301b(3) and (4) above and should include a functional check of the position indicator system. Those ground tests must be satisfactorily completed before issuing the TIA.

(6) During the official FAA/AUTHORITY flight tests, compliance with the emergency operation, position indicator, and control aspect of § 27.729(c), (e), (f), and (g), respectively, will be verified or accomplished. In addition, the F&R test program plan (§ 21.35) will specify certain tests or evaluations for the retraction system.

(7) Position Indicator Evaluation.

(i) When evaluating the position indicator system, emphasis should be placed on the switches and their installations and on the cockpit presentation. Each gear must have its own set of switches to indicate when it is secured in its extreme “up” position and its extreme “down” position. The switches must be located to give a valid indication of the arrival of the gear at its extreme position.

(ii) The reliability and environmental qualifications of the switches to be used should be carefully considered. An example of a condition that has potential for trouble is operation on wet areas. Trouble starts when water is picked up by the tires and deposited on the switches. During winter months, the water can freeze, and the resulting ice may prevent the switch from functioning properly.

(iii) An acceptable cockpit presentation consists of two lights for each gear. One light is colored “green” and indicates when its gear is secured in the extreme “down” position. The other light is colored “amber” and indicates when its gear is in transit. When the gear is in either extreme position, the in transit light is “out.” For this presentation the indication to the pilot that the gear is in the extreme “up” position is an all-gear lights-out condition.

(8) Warning System.

(i) A warning system to alert the crew if the landing gear has not been fully extended and locked is required.

(ii) The landing gear warning system that is provided should be evaluated by a flight test pilot. A primary concern should be that the warning device provided is

distinctive in its operation from other warning devices incorporated into the rotorcraft cockpit design.

(iii) An acceptable method of interlocking a normal landing mode and the position of the landing gear would be through the selection of some appropriate speed that is less than V_{LE}. The system would be instrumented such that if the gear is not down and locked and the rotorcraft goes below the selected airspeed, the landing gear warning device would be activated.

(iv) An acceptable manual shut off capability would be one that allows disabling the warning device and yet will automatically reset itself when the landing gear is cycled or retracted, or the rotorcraft's speed is increased above that speed selected to activate the warning device.

(v) The appropriate provisions of § 27.1309 should be used to evaluate the impact of system malfunctions.

AC 27.731. <u>§ 27.731 WHEELS</u>.

a. <u>Explanation</u>. This standard requires use of approved wheels, either approved under TSO-C26 or approved under the type certificate for the aircraft. Wheels must satisfy both a design static (1g) load and design limit landing or taxiing load determined under the applicable ground load requirements. Standards for a tire installed on a wheel are contained in § 27.733.

b. <u>Procedures</u>.

(1) The structural design loads data shall contain both a static load and a landing and taxiing load for each wheel. These loads are determined by virtue of compliance with the standards of § 27.731(b) and (c). The ratings of the wheel shall not be exceeded. TSO-C26c contains minimum performance standards for TSO approval of aircraft wheels and wheel-brake assemblies. Ratings are assigned in accordance with this performance standard.

(2) If a wheel selected for an aircraft design has TSO-C26 approval, the wheel manufacturer will supply the rating to the aircraft manufacturer. Each wheel shall be marked as prescribed which includes a listing of the TSO number. Even though a wheel is TSO approved, the application on the aircraft (loads imposed on the wheel) requires proof that the rating is not exceeded.

(3) If a wheel selected for an aircraft design is not approved under TSO-C26, the necessary data, both detail design and assembly drawings and qualification tests and test report data, will be required to comply with the standards contained in Part 27. Design control and inspections will be accomplished as a part of the aircraft type design. Structural substantiation and any appropriate qualification tests shall be accomplished. See §§ 27.471 through 27.497 for the ground load conditions.

(4) The Tire and Rim Association, Inc., generally issues a yearbook listing tire and rim sizes and ratings. The dimensions and contours for aircraft wheel rims are contained in Section 9 of this yearbook.

AC 27.733. § 27.733 (Amendment 27-11) TIRES.

a. Explanation.

(1) This standard specifies both design and performance criteria for tires. The tire must fit the wheel rim. The maximum static ground reaction for the condition specified must not exceed the maximum static load rating of each tire. In addition, any tire of retractable gear systems must have adequate clearance from surrounding structure and systems as specified.

(2) Main, nose, and tail wheel tires must comply.

(3) Tire performance standards are contained in TSO-C62.

b. Procedures.

(1) The aircraft structural design loads should contain a maximum static load imposed on the tires. The load is derived for a static ground reaction assuming the design (maximum) weight and the critical center of gravity for each tire of the landing gear. The wheel loads are determined under § 27.731(b). Reduced weight but forward CG conditions may result in the highest static load on a nose wheel tire. Thus, combinations of weight and CG locations require investigation for the maximum tire load of each main, nose, and tail wheel tire.

(2) The maximum possible size of the tires considering appropriate temperatures, aging, and pressure should be obtained to check wheel well and cover clearances. Tire dimensions (for clearances) may be found in the yearbook noted in paragraph AC 27.733b(4). If the tire clearance is questionable, objects may be taped to the tire to simulate tire growth or oversize dimensions expected and the wheel retracted and rotated by hand to check for possible interferences. Minimum clearance, such as one-half inch, may be adequate as a design objective. The design drawings should be reviewed for information of correct systems installations and landing gear rigging within the wheel wells and wheel covers, if installed. If necessary to control tire sizes, specific manufacturer's tires should be used as "required equipment" and the tire manufacturer and the part number should be specified in the design data and on the type certificate data sheet as "required equipment."

(3) As specified in paragraph d of § 27.729 adopted by Amendment 27-21, an operation test of any retractable landing gear should be performed. During this operation test, the tire clearances described in paragraph AC 27.733b(2) should be

determined and recorded. Only the least or minimal clearance found, if adequate, should be recorded in the type inspection report or other appropriate type design report.

(4) The Tire and Rim Association, Inc., generally issues a yearbook listing tire and wheel rim sizes and ratings. This information is advisory as stated in the yearbook. Section 9 concerns aircraft tires and rims. Table AP-5 in Section 9 of the yearbook concerns tires used on rotorcraft. The tire may be selected initially from the yearbook, but qualification data for the specific tires used shall be furnished with the type design data in compliance with the standards. Section 9 also contains tire size and tire growth dimensions.

(5) Aircraft Tires. Minimum performance standards for aircraft tires, excluding tail wheel tires are found in TSO-C62, Aircraft Tires. Tires meeting TSO-C62 are marked as prescribed in the standards. The load rating (reference § 27.733) is marked on the tire. TSO tires are not required but should be used whenever possible. The manufacturer's information, such as load rating, should be included in the aircraft type design structural substantiation data.

AC 27.735. <u>§ 27.735 (Amendment 27-21) BRAKES.</u>

a. <u>Explanation</u>.

(1) Brakes are required for wheel landing gear aircraft. Minimum performance standards are contained in this section. During the course of the FAA/AUTHORITY flight test program and of any F&R program conducted under § 21.35, the brakes shall be used and evaluated.

(2) Design criteria are contained in this standard.

(i) The braking device must be controllable by the pilot. It is optional for the second pilot station except as may be specified under the provisions of § 27.771.

(ii) The braking device must be usable during power-off landings.

(3) Performance criteria are also contained in this standard.

(i) The brakes must be adequate to counteract any normal unbalanced torque when starting or stopping the rotor or rotors.

(ii) The brakes must be adequate to hold the rotorcraft parked on a 10° slope on dry, smooth pavement.

(4) In §§ 27.493(b)(2) and 27.497(g)(2)(ii), limiting brake torque is one ground load standard for design of the landing gear.

(5) Although not specifically noted in a standard, the position of the brake on the wheel is important. The brake should be positioned to avoid ground contact whenever the tire is deflated.

(6) TSO-C26 contains minimum performance standards for aircraft landing wheels and wheel-brake assemblies. For rotorcraft, a wheel-brake assembly design rating is established by the manufacturer. The TSO standard for rotorcraft brakes specifies a 20° slope standard (rather than a 10° slope) for an over-pressure hydraulic brake test.

(7) The brake application device at the pilot station is subject to other structure strength standards in this Part, such as the limit pilot forces or torque specified in § 27.397.

b. Procedures.

(1) Wheel-brake assemblies approved under TSO-C26 will have various (rotorcraft) ratings as specified in the standard. One rating of TSO standard for a rotorcraft wheel-brake assembly is the kinetic energy capacity in foot-pounds at the design landing rate of absorption. The design takeoff and landing weight and rotorcraft speed in knots for brake application are a part of the equation. The brake manufacturer should furnish this rating and the two noted parameters for the selected design or designs. The ratings of selected brakes should be included in a structural design data report such as a design criteria report. The use or application of each brake design on the particular rotorcraft design should not exceed capacity of the brake or the ratings established under TSO-C26. If appropriate, the part number and manufacturer of each brake may be listed in the structural data reports as well as listed in the type design drawings.

(2) The limiting brake torque obtained from the brake manufacturer should be used in complying with § 27.493(b)(2).

(3) Compliance with the brake standards should be confirmed, demonstrated, and recorded as a part of the flight test type inspection report. This applies to TSO-C26 brakes and to brakes approved as a part of the aircraft type design.

(4) If found necessary under the provisions of § 27.771, the second pilot station should have brake control devices. The brake control devices should be listed with the other required equipment that defines the equipment necessary for a second pilot station.

(5) A brake assembly may be evaluated and approved under Part 27 as a part of the aircraft type design. TSO-approved brakes are not specifically required but are recommended. For non-TSO-approved brakes, all detail and assembly drawings, required test proposals, and test results reports may be submitted and processed as a unique part of the particular aircraft type design.

(6) During an inspection of the landing gear, such as an engineering compliance inspection, the brake location should be checked to ensure the brake does not contact the ground when the tire is deflated. Type design drawings should control the proper location of the brake on the landing gear.

AC 27.737. § 27.737 SKIS.

a. Explanation. This standard is derived from airplane standards. Aircraft skis approved under TSO-C28 may be used on rotorcraft. TSO-C28 for aircraft skis refers to Sections 4 and 5 of National Aircraft Standards Specification 808, dated December 15, 1951, for strength and performance standards. These standards are conservative for rotorcraft ski installations.

(1) A maximum limit load rating is assigned to each ski approved under TSO-C28.

(2) This limit load rating must not be exceeded by the maximum limit ground load determined under the standards of § 27.505, Ski landing conditions.

(3) Ski mounting or installation parts used in the particular application are subject to substantiation as any landing gear member is subject to substantiation.

(4) Ski installations are also subject to flight and ground operation evaluations.

b. Procedures.

(1) The limit load rating for the ski selected shall be obtained from the ski manufacturer. This information shall be included in the design criteria and/or structural substantiation reports. The type design drawings will include the appropriate part number for the TSO-approved product and the necessary installation information.

(2) The design limit loads derived in compliance with § 27.505 shall not exceed the ski limit load rating.

(3) Skis that are not TSO approved may be approved as a part of the aircraft type design by complying with the strength and performance standards contained in TSO-C28 (NAS 808).

(4) Pads or “bear paws” installed on skid or wheel landing gear to facilitate operations in snow conditions may be approved as a part of or as an alteration to the aircraft type design. Rational design loads applicable to the particular pad design must be developed and strength substantiating data submitted proving compliance with the strength and performance standards contained in Part 27. In addition, skid landing gear may be subject to excessive vibratory loads while in flight whenever the weight and mass distribution is altered by adding “bear paws.” The effect of additional weight should be investigated. Resonant vibratory conditions should be avoided or highly damped.

SUBPART D - DESIGN AND CONSTRUCTION

FLOATS AND HULLS.

AC 27.751 § 27.751 (Amendment 27-2) MAIN FLOAT BUOYANCY.

a. Explanation.

(1) The section specifies standards for single and multiple float buoyancy in fresh water. The standard does not apply to ditching/emergency flotation devices, but to amphibian rotorcraft devices.

(2) It is a design and a performance standard. Rigid or inflatable floats may be used. Enough water tight compartments (per Amendment 27-2) rather than a specific number are required to minimize the probability of capsizing when one compartment is flooded or deflated.

b. Procedures.

(1) Excess buoyancy. A minimum of 50 or 60 percent in excess of the maximum certificated weight of the rotorcraft is required for single or multiple floats respectively. The weight of fresh water (density 62.42 pounds per cu. ft.) displaced by fully submerged float or floats (total volume at operating pressure of each float is used) should be a minimum of 50 or 60 percent greater than the maximum certificated weight of the rotorcraft.

(2) Capsizing.

(i) Each float should have enough sealed, separate and approximately equal volume compartments to minimize the probability of capsizing when the critical compartment is flooded or deflated. Five or more compartments in each float are usually necessary to meet the standard. Ten compartments per float have been employed in certain designs.

(ii) An analysis or test or combination thereof may be used, if necessary, to prove a positive margin of stability with the most “critical” compartment in one float flooded or deflated, that is ineffective.

(iii) The location of the floats, and the most critical compartment, the rotorcraft weight, mass moment of inertia, and center of gravity location are also important considerations for capsize stability.

AC 27.753 § 27.753 MAIN FLOAT DESIGN.

a. Explanation. Loads and load distributions are specified for float design as follows:

(1) Bag floats are to be designed for:

(i) The maximum pressure differential developed at the maximum design altitude.

(ii) The vertical loads prescribed in § 27.521(a) distributed over three-fourths of the bag's projected area.

(2) Rigid floats are to be designed for vertical, horizontal, and side loads prescribed in § 27.521 distributed along the length of the float.

b. Procedures. Structural substantiation may be accomplished by static tests or analyses using the specified loads. Substantiation should cover the float and float attachments.

AC 27.755 § 27.755 HULLS.

a. Explanation.

(1) The section requires amphibious rotorcraft with a single hull (main float design) and with auxiliary floats (outriggers) to provide a margin of positive stability great enough to minimize the probability of capsizing when any single (usually the most critical) compartment is flooded. Landing gear wheel tires may be used for stability purposes as well.

(2) Limitations for water operation are not intended by this section, but information for water operation must be included in the rotorcraft flight manual.

(3) Wave height or sea state and buoyancy relative to fresh water is not specified but is encompassed in the objective statement of § 27.751(b).

(4) Section 27.751 specifies an excess buoyancy requirement of 50 percent for single main floats (hulls) and contains a capsize/stability standard also. This section complements § 27.755 for certain hull designs.

(5) Sections 23.751, 23.755, and 23.757 concern design standards for small airplanes and may provide insight into possible rotorcraft hull designs.

b. Procedures.

(1) The main hull must have multiple compartments. Assuming the hull has 50 percent excess buoyancy capacity, six to ten sealed compartments of approximately equal volume would allow loss of one with at least 25 percent excess capacity remaining. However, the attitude of the rotorcraft is critical with respect to capsize stability, and additional compartments may be necessary.

(2) The designer must consider separately the loss of buoyancy for each critical compartment, the aircraft center of gravity, and attitude in the water for the appropriate sea state or water height. Sea state 4, moderate, as noted in figure AC 27.801-1, is acceptable.

(3) The auxiliary floats (outrigger) must have multiple compartments. In addition, wheel tires may be used as a compartment if applicable to the design.

(4) For each critical condition under consideration, a single compartment for either the main hull or auxiliary float should be flooded or collapsed. Combined failures, one in each, are not required.

(5) Model stability (or capsize) tests are encouraged to demonstrate compliance with this section.

SUBPART D - DESIGN AND CONSTRUCTION

PERSONNEL AND CARGO ACCOMMODATIONS

AC 27.771. § 27.771 PILOT COMPARTMENT.

a. Explanation.

(1) Volumes have been written on human factors and their contribution to pilot workload and fatigue. This document cannot begin to address the myriad of considerations involved in pilot compartment design. The intent of the rule is simply to ensure that reasonable human factor engineering practices have been followed. Equipment should be logically grouped within the pilot's reach and view and be easy to operate. Seats should provide a reasonable level of comfort for the normal anthropometric range of pilots for a typical mission duration. Environmental considerations such as radiation from the sun through overhead windows should be addressed. Heating, cooling, and ventilation systems should be adequate for the expected range of operating conditions.

(2) Each pilot compartment and its equipment should allow the minimum flightcrew to perform their duties without unreasonable concentration or fatigue. If there is a provision/requirement for a second pilot, his station should be equipped with primary flight controls. Duplicate wheel brakes are recommended. Duplication of miscellaneous controls such as idle detent switches, RPM beep functions, nosewheel locks, and parking brakes has not been required. The need for duplicate instruments for the second pilot tends to be a function of cockpit size and panel configuration.

(3) Webster defines appurtenances as "accessory objects or apparatus." Items such as blowers, fans, and gyros should not have noise or vibration characteristics which could contribute to pilot fatigue or distraction. Instrument panel vibration is specifically addressed in § 27.1321.

b. Procedures. Initial evaluation of the pilot compartment should be conducted on the ground. However, the cockpit assessment should be an ongoing effort throughout the flight test program. If a second pilot position is provided/required, the adequacy of controls and instruments should be evaluated under all normally expected operating conditions. If a second pilot position is not provided/required, any passenger position in the pilot compartment should be evaluated to ensure that a passenger, properly briefed by the flightcrew, can sit comfortably without inadvertent interference with normal control operations. All equipment should be operated during at least one flight of typical mission profile and duration.

AC 27.773. § 27.773 PILOT COMPARTMENT VIEW.

a. Explanation. The section outlines requirements for pilot view in fairly general terms. Requirements are purposely less stringent than for transport category rotorcraft to allow for cockpit designs ranging from fully enclosed to open to the elements.

b. Procedures.

(1) The following procedures are one acceptable means of evaluating pilot compartment field of view considering only those objects in the pilot compartment and the windshield and its support structure in nonprecipitating conditions. The applicant's design is not required to meet these guidelines, and each design should be evaluated on its own merit. The area of visibility established in the following paragraphs will provide an acceptable level of visibility for a minimum crew of one pilot. In the event that a minimum crew of two, a pilot and copilot, is required, the second pilot should have an area of visibility equivalent to that provided for the pilot but on the opposite side. In this event, the pilot's area of visibility to the left as shown in figure AC 27.773-1 needs only to comply to 60° left, and the copilot's area of visibility to the right needs only to comply to 60° right.

(i) A single point established in accordance with the provisions of this paragraph constitutes the referenced eye position (i.e., a point midway between the two eyes) from which the central axis may be located. The referenced eye position is a reference datum point from which the aircrew station geometry is constructed. The referenced eye position should be located by means of ship's coordinates that contain station reference number, water line, and butt line for both pilot and copilot, if applicable, and comply with:

(A) The pilot's seat in a normal operating position from which all controls can be utilized to their full travel by an average subject, and which should provide for vertical adjustment of the seat of not less than 2.5 inches above and 2.5 inches below this initial vertical position.

(B) The seat back in its most upright position.

(C) The seat cushion depression being that caused by a subject weighing 170 to 200 pounds.

(D) The longitudinal axis of the rotorcraft to be that of "cruise attitude" ($0.9V_H$ or $0.9V_{NE}$ whichever is lower).

(E) The point established not beyond 1 inch to the right or left of the longitudinal centerline of the pilot's seat.

(F) All measurements made from the single point established in accordance with this paragraph.

(ii) A dual lens camera, as photo recorder, should be used in measuring the angles specified in the paragraphs listed below. Other methods, including the use of a goniometer, are acceptable if they produce equivalent areas to those obtained with a dual lens camera. When not using a dual lens camera, compensation should be made for one half of the distance which exists between the eyes, or 1 ¼ inches. With the referenced eye position located as indicated in paragraph AC 27.773b(1)(i), and utilizing binocular vision and azimuthal movement of the head and eyes about a radius, the center of which is 3 and 5/16 inches behind the referenced position (this point to be known as the central axis), the pilot should have the following minimum areas of vision measured from the appropriate eye position. (See figure AC 27.773-1.)

(A) 20° forward and above the horizon between 0° and 100° left.

(B) 20° forward and below the horizon between 10° and 100° left.

(C) 20° forward and below the horizon at 10° left increasing to a point 30° forward and below the horizon at 10° right.

(D) 50° forward and below the horizon between 10° right and 135° right.

(E) 20° forward and above the horizon at 0° increasing to a point 40° above the horizon at 80° right and 100° right and then decreasing to a point 20° forward and above the horizon at 135° right.

(iii) Any vertical obstruction which falls within the minimum area of visibility outlined in paragraph AC 27.773b(1)(ii) should be governed by the following:

(A) Between 20° right and 20° left--no vertical obstruction.

(B) Between 20° right and 135° right -- no vertical obstruction greater than 2.5 inches in width.

(C) Between 20° left and 100° left -- no vertical obstruction greater than 2.5 inches in width.

(iv) Any horizontal obstruction which falls within the minimum area of visibility outlined in paragraph AC 27.773b(1)(ii) should be governed by the following:

(A) The area 15° forward and above the horizon between 135° right and 40° left decreasing to a point 10° above the horizon at 100° left, and 15° forward and below the horizon between 135° right and 100° left should be free from horizontal obstructions.

(B) The area above and below the horizon which is between the minimum area of vision specified in paragraphs AC 27.773b(1)(ii) and AC 27.773b(1)(iv)(A) is

limited to one horizontal obstruction above and one below the horizon. These horizontal obstructions should not be greater than 4 inches in width. An overhead window which will provide twice as much additional visibility as that lost due to the obstruction should be located immediately above any obstruction above the horizon. This requirement is in addition to any area of visibility specified by paragraph AC 27.773(b)(2)(ii) which may be included in the overhead window area.

(C) If the instrument panel obstructs any required area between 10° left and 10° right below 20° forward and below the horizon, a window which affords triple equivalent additional visibility should be located immediately below and between the angles of 20° left and 20° right above 65° below the horizon.

(v) For steep rejected takeoffs and steep approaches (such as to oil rigs or confined heliports), the visibility should be such that the pilot can see the touchdown pad and sufficient additional area to the side and forward to provide both an accurate approach to the touchdown point as well as a satisfactory degree of depth perception. A 5-inch head movement by the pilot forward and/or sideward of the normal position is acceptable in determining compliance.

(2) Since glare and reflection often differ with the sun's inclination, consideration should be given to evaluating the cockpit at midday and in early morning or late afternoon. Windshields with embedded wire heating elements should be evaluated for distortion with the system both "ON" and "OFF." If night approval is requested, all lighting, both internal and external, should be evaluated in likely combinations and under expected flight conditions. Although a certain amount of equipment reflection (avionics control heads, etc.) in the windshield may be unavoidable, the pilot's normal field of view should be unobstructed. Windshield reflections often dictate large glareshields resulting in reduction of the optimum field of view. This problem is most apparent in IFR equipped aircraft (having larger instrument panels and avionic consoles) operating in VFR utility roles. Landing and taxi lights should be exercised throughout their adjustment range (if applicable) to check for reflections, particularly in chin windows. Anticollision and strobe lights should be evaluated to ensure that frequency interaction and reflections off the rotor do not result in distractions to the pilot. The effect of cabin lighting on the pilot compartment view should be assessed, particularly on EMS-configured aircraft where the in-flight use of cabin lights may be mandatory.

(3) Moderate rainfall is defined by the National Weather Service as an accumulation of between 0.01 and 0.03 inches in 3 minutes. Since the rule effectively permits open cockpits, a determination of what would unduly impair the pilots' view in moderate rainfall is obviously very subjective. If it is established that rain removal systems are necessary, those systems may be evaluated on the ground with a hose, but they should also be assessed in flight under applicable conditions. Obscuration of side windows by rainfall should be addressed, particularly for confined area approaches. The need for windshield wash systems should be assessed if the aircraft will be used in an offshore salt-spray environment.

(4) If icing certification is requested, a means must be provided to ensure that a sufficiently large viewing area is kept clear of ice to permit safe operation. As a minimum, a clear area on the windshield should be available, although some configurations could require a clear view in other areas to provide an adequate level of safety in certain operations. Systems provided to ensure a clear view in icing conditions should be evaluated during icing flight tests.

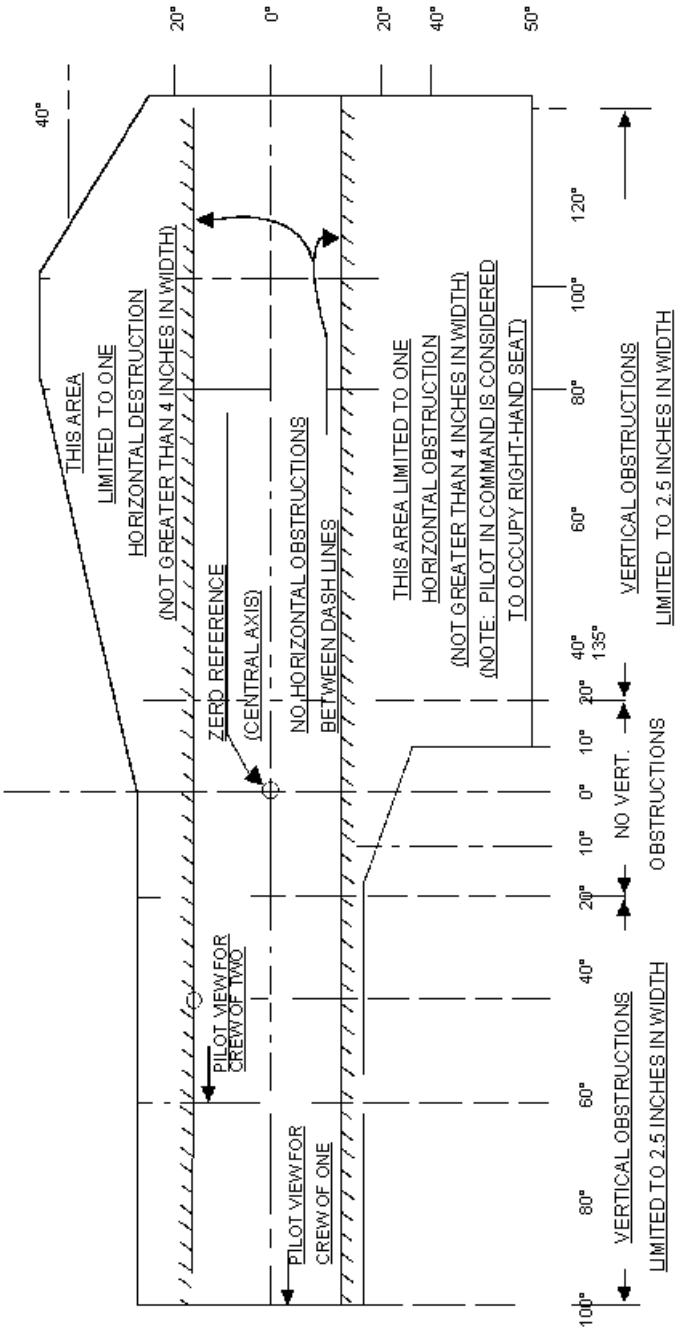

FIGURE AC 27.773-1 COCKPIT VISIBILITY

AC 27.775 § 27.775 WINDSHIELDS AND WINDOWS.

a. Explanation. The use of nonsplintering safety glass is specified when glass is used in windshields and windows to protect crew and passengers in the event that window fracturing occurs.

b. Procedures. Use nonsplintering safety glass in windshield or window applications which contain glass rather than plastic acrylics, polycarbonates, epoxies, etc. The glass selected should meet a specification such as MIL-G-25871, and if new vendors are selected by an airframe manufacturer, test data should be obtained from the vendor to demonstrate the safety glass provided meets an acceptable specification and provides adequate nonsplintering capability.

AC 27.775A § 27.775 (Amendment 27-27) WINDSHIELDS AND WINDOWS.

a. Explanation. Amendment 27-27 changed § 27.775 to allow the use of materials other than nonsplintering safety glass; i.e., plastics are allowed. Additionally, whatever material is used should not break into dangerous fragments upon impact.

b. Procedures. The procedures contained in paragraph AC 27.775 apply equally to glass or plastics.

AC 27.777 § 27.777 COCKPIT CONTROLS.

a. Explanation. This section defines the general cockpit control requirements. Cockpit control location and arrangement with respect to the pilot's seat must be designed to accommodate pilots from 5'2" to 6'0" in height. Pilots within this range should be able to reach and operate all required controls and have sufficient clearance with the structure, panels, etc.

b. Procedures.

(1) The applicant should have a cockpit design report which documents the anthropometric suitability of the cockpit. Subsequent cockpit evaluations of control movement and location should be conducted with adjustable seats and/or controls positioned in a flight position for the subject pilot. Essential controls should be evaluated with the shoulder harness locked in the retracted position. Evaluation pilots should be aware of their individual anthropometric measurements and temper their assessments based on this information. Ideally, a new design should include evaluations by a range of different sized subject pilots. Control considerations for a second pilot position are the same as for the pilot station. Paragraph AC 27.771 discusses current philosophy concerning duplication of controls.

(2) As background, the following are examples of cockpit control issues which should be avoided:

(i) Collective control blocking the lateral movement of a pilot's leg, which in turn restricts the left lateral cyclic displacement.

(ii) Seat or seat cushion impeding the aft cyclic movement.

(iii) Inadequate space for large feet equipped with large flight boots.

(iv) Control/seat relationship which requires unusual pilot contortions at extreme control displacements.

(v) Control/seat relationship or control system geometry which will not permit adequate mechanical advantage with unboosted controls or in a boost OFF situation.

(vi) Addition of control panels or equipment to instrument panels or consoles which restrict full control throw.

(vii) Brake pedal geometry which results in inadvertent brake application upon displacement of the directional controls.

(viii) Controls for accessories or equipment which require a two-handed operation.

(ix) Emergency external cargo release controls which cannot be activated without releasing the primary flight controls.

(x) Essential controls which cannot be actuated during emergency conditions with the shoulder harness locked.

(xi) Throttle controls which can be inadvertently moved through idle to the cutoff position.

(xii) Switches, buttons, or other controls which can be inadvertently activated during routine cockpit activity including cockpit entry.

(xiii) Failure to account for operation with the pilot wearing bulky winter clothing.

(xiv) Aft cyclic movement limited by the pilot's body with a fore and aft adjustable seat in the full forward position.

AC 27.779. § 27.779 (Amendment 27-21) MOTION AND EFFECT OF COCKPIT CONTROLS.

a. Explanation. The section standardizes motion and effect of cockpit controls. While this paragraph specifically addresses primary flight controls, engine power

controls, and landing gear controls, it applies to all cockpit controls not addressed in other paragraphs.

b. Procedures.

(1) The cyclic should be mechanized such that movement of the control results in a corresponding sense of aircraft motion in the same axis. While a certain amount of coupling may be present following a pure control input in a given axis, that coupling should not be objectionable to the pilot. Collective pitch control should be mechanized such that an upward movement of the collective results in a corresponding relative motion of the aircraft in the vertical plane. Again, coupling should not be objectionable. Care should be taken to insure that the primary pilot's perception of collective motion is in the vertical plane. The objective is to clearly differentiate collective motion from that associated with an airplane throttle. The rule is self-explanatory on the subject of engine power controls. A distinction is made between normal landing gear controls and emergency controls. Emergency controls may operate in a sense which might not correspond to the direction of resultant gear motion.

(2) The recommended operating convention and "switchology" for miscellaneous controls are:

(i) Up/forward = on/increase

(ii) Down/aft = off/decrease

(iii) Variable rotary controls should move clockwise from the OFF position, through an increasing range, to the full ON position. For some variable intensity controls such as instrument lighting, the desired minimum setting may not be completely off. Pushbuttons not giving an obvious indication of mechanical position should be configured such that the flightcrew has a clear indication of switch actuation under both day and night (if applicable) conditions. Failure of the indication should be shown to be free of hazards.

(3) Slew or "beep" switches associated with flight control system applications warrant special attention. The recommended conventions for control-mounted single, or multifunction, two or four-way "beep" switches are:

(i) Cyclic.

Switch Direction	Flight Control System /Autopilot Configuration	Aircraft Response
Forward/up	basic trim	nose down
	airspeed/groundspeed mode selected	increased airspeed forward speed reference
	vertical speed mode selected (without airspeed mode engaged)	increased rate of descent/decreased rate of climb
	hover mode selected	increased ground-speed or forward acceleration reference
Left	basic trim	left wing down
	heading mode selected	slow heading reference left
	hover mode selected	increased ground-speed or acceleration reference to left

(ii) Collective (assumes switch is mounted on top of grip).

Switch Direction	Flight Control System /Autopilot Configuration	Aircraft Response
Forward	control position hold	down collective
	vertical speed mode selected	increased rate of descent/decreased rate of climb
	hover mode selected	decreased hover height reference
Left	control position hold	increase left pedal
	hover mode selected	slow heading reference left

(iii) Opinions are divided concerning the preferred convention for forward and rearward motion of slew switches mounted atop the collective grip. Part of the reason appears to stem from the fact that such a switch is never used in a purely control position trim capacity. The switch has normally remained nonfunctional until a vertical autopilot mode is selected. At that point, the switch is viewed by one pilot/engineer contingent as either an autopilot reference slew function or a power increase/decrease switch which should follow the "forward equals increase" convention. The other group views the switch as a form of control position trim and finds the "forward equals down collective" convention to be more consistent with the sensing used for the cyclic beep switches. An obvious solution is to mount collective/vertical axis switches in a vertical orientation on the grip. Barring that alternative, viable arguments can be made for either philosophy. The recommended convention was selected following a survey of manufacturers and test pilots.

[The remainder of this page intentionally left blank.]

[This page intentionally left blank.]

AC 27.783. § 27.783 DOORS.

a. Explanation.

(1) Closed cabins must have at least one external door that is adequate and easily accessible for all of the occupants. The standard envisaged a door intended for normal use and for an emergency exit for all passengers. The passenger compartment, itself, should not be partitioned.

(2) Passenger doors should not be located near main or tail rotors such that persons using the door or doors would be endangered while entering or leaving the aircraft. The discs of engines or other propulsion system devices were not included in this standard. Procedures or instructions may be used to support compliance. Section 27.1565 concerns tail rotor markings.

(3) Cabin doors of normal category rotorcraft should inherently comply with the exit standards in § 27.807(b) concerning the size of the unobstructed opening, accessibility, location, method of opening, arrangement, probable jamming due to fuselage deformation, and possibly markings inside and outside. The standards for the features and characteristics of exits should be applied to cabin doors unless an "exit" is also installed in the same side of the fuselage. The marking standards of § 27.1557(d) for exits should be applied to doors unless the door is readily identified and its opening features are simple and obvious. It is not necessary to use red and white colors, provided the door instructions and markings are conspicuous.

(4) If the door is used as a "ditching exit," the threshold of the door/exit must be above the waterline of the rotorcraft while in calm water (§ 27.807(d)). Note that "ditching approval" under § 27.801 is an optional standard.

(5) If a lock is used as an optional feature, the lock must not engage inadvertently or, as a result of mechanical failure, prevent possible opening of the door from inside or outside the cabin.

(6) If the door is a sliding door and intended to be opened and closed in flight, the sliding mechanism should positively attach the door to the airframe (e.g., sliding hinge) to minimize the likelihood of the door departing the aircraft in flight. Appropriate flight limitations should also be established to minimize any hazard while operating the door.

[The remainder of this page intentionally left blank.]

[Section AC 27.783 continued on the next page.]

b. Procedures.

(1) The layout of the most dense or critical (from evacuation aspect) interior arrangement should be reviewed as soon as possible in the certification program. Each passenger shall have easy access to each passenger door/exit. The crewmembers may have separate emergency exits or doors on each side of the aircraft separate from the passenger door if desired by the applicant. A mockup may be used to make an early assessment of the interior critical areas for door accessibility, operation of the door, door markings, and other features critical to compliance. A comprehensive interior compliance inspection may be accomplished later in the program to confirm or correct conclusions derived from a review of layout or mockup data.

(2) Mockup interiors used in the preliminary evaluation may not have all padding, liners, compartments; i.e., it may not be a fully equipped interior arrangement.

(3) The door should have clearance with the fuselage door frame to allow reasonable deflection without jamming, or the door may be designed to minimize jamming. So called “rip hinges” may be employed as well. Rip hinges may also serve as the primary emergency release for the door.

(4) If a door has an emergency release system for the door that is separate from a “normal open and close” system, certain standards of § 27.807(b) and (c) should apply.

(5) As good practice, internal and external markings are recommended for each door as follows:

(i) Indicate when the door is closed and fully locked.

(ii) Indicate the means of opening.

(iii) Contrasting colors should be used in markings. Red and white are acceptable but not required. For exit markings, see § 27.1557(d).

(6) Crew and passengers should be protected from the main and tail rotors (discs) as prescribed in § 27.807(b). Two avenues of compliance are noted here.

(i) A layout of the aircraft may be used to evaluate compliance with § 27.783(b). The main rotor should have sufficient clearance to allow a typical person to stand upright, outside, near the door or doors. The auxiliary rotor should be located as far as practicable from any passenger doors. Appropriate instructions for entering or leaving the rotorcraft may be furnished in the flight manual, placards, or equivalent to further reduce possible hazards. Tail rotor marking standards are referenced in paragraph AC 27.1565.

(ii) If necessary, a door and engine or rotor system interlock system may be employed to prevent opening of the door with the rotors operating. Other systems may be used. In case of emergency, the system must allow opening of the door (exit) from inside or outside the rotorcraft.

AC 27.783A. § 27.783 (Amendment 27-26) DOORS.

a. Explanation.

(1) Each closed cabin should have at least one door. A door on the opposite side of the cabin may be used to also comply with the exit requirement of § 27.807.

(2) Amendment 27-26 extends the requirements of § 27.783 to:

- include each external door, not just passenger doors; and,

- require provisions of door location and procedures to protect persons from danger from propellers, engine intakes, and engine exhausts.

b. Procedures. All of the policy material pertaining to this section remains in effect. In addition:

(1) Occupants of the rotorcraft and servicing personnel should be protected from possible injury when using any external door to enter or egress the rotorcraft and when loading cargo or servicing the rotorcraft. Consideration should be given to door location and operating procedures to include protection from propellers (if equipped) and engine inlets and exhausts, as well as from rotors.

(2) These new requirements clarify that engine exhausts, engine inlets, and propellers, as well as rotors, are potentially hazardous and should be located or designed to protect rotorcraft occupants and ground personnel.

(3) Door operating procedures, including readily visible markings, should be provided to minimize possible injury to personnel when practical component locations or component design features, alone, do not assure freedom from possible injury.

AC 27.785. § 27.785 (Amendment 27-21) SEATS, BERTHS, SAFETY BELTS, AND HARNESSES.

a. Explanation.

(1) The standard concerns occupant seat and berth (litter) devices and restraint of the occupant (170-pound weight) for specified conditions. The occupants shall be restrained and protected for flight, landing, and the emergency landing conditions specified in § 27.561(b). This standard and § 27.561 have the objective of providing

each occupant with every reasonable chance of escaping serious injury for the stated conditions.

(2) The standard includes both serious (general) injury, paragraphs (a) and (e), and head injury, paragraph (b). Furthermore, paragraph (b) requires certain design features or practices for head injury protection.

(3) The pilot seats shall additionally withstand the pilot control effort forces stated in § 27.397.

(4) Seat or berth static test or structural analysis conditions (which are procedures) were previously stated but removed by Amendment 27-21.

b. Background.

(1) FAR Part 27 through Amendment 27-20 and its predecessor, CAR Part 6, specified design conditions (flight, landing, and emergency landing conditions, § 27.561) for each seat and berth. Pilot seats were also subject to pilot control forces (reaction) of § 27.397. Structural strength analysis and testing could be simplified or conditions combined as stated. A factor applied to each design load shall be at least the “fitting” factor specified in § 27.625 and applied as stated therein.

(2) Amendment 27-21, adopted November 1984, expanded the standard significantly to contain objective and specific standards for improved occupant protection for flight, landing, and the emergency landing conditions of § 27.561.

(i) A shoulder harness is required for each front seat occupant. A shoulder harness (also called upper torso restraint) or other means shall be used to protect other occupants from head injury. Design features of the belt and harness are also included. A factor of 1.33 was also adopted. Protection while seated or moving about during normal flight and moderately rough air is also a part of the amended standard. This is similar to the transport rotorcraft standards.

(ii) A load distribution between the belt (60 percent) and harness (60 percent) is stated. Design standards for any head rest, if installed, are stated. A factor of 1.33 shall be applied to the design loads for the attachment of each seat to the structure and each belt and/or harness to the seat or structure and the head rest. This factor is applied whether the seat and restraint system is proven by static test or by analysis.

(3) An AC applicable to safety belts and shoulder harnesses for small airplanes has been issued. The information in AC 23-4, “Static Strength Substantiation of Attachment Points for Occupant Restraint System Installations June 20, 1986, should be helpful in complying with § 27.785.

(i) Dynamic impact tests may be voluntarily proposed by the applicant. At least two conditions should be used to be representative of impact cases. Report No. DOT/FAA/CT-85/11, Analysis of Rotorcraft Crash Dynamics for Development of Improved Crashworthiness Design Criteria, June 1985, may be obtained for reference from the National Technical Information Service, Springfield, Virginia 22161.

(ii) Advisory Circular 21-22, Injury Criteria for Human Exposure to Impact, June 20, 1985, may be used for part of the acceptance levels or performance criteria in developing a proper dynamic test proposal. The static design conditions contained in the present standards shall be satisfied also.

c. Procedures.

(1) Each seat with its belts and harnesses are to be substantiated for the flight, ground, and emergency landing loads of § 27.561 by structural test or stress analysis. Approval can be gained by Technical Standard Order (TSO) approval or by accomplishing sufficient structural substantiation to gain certification approval of the seat and its belt(s) and harness as part of the type design of the rotorcraft. TSO No. C-39a concerns standards for aircraft seats, including rotorcraft seats. If TSO No. C-39a is used as an approval basis for a specific rotorcraft seat, the seat and harness should be checked to ensure it has been substantiated for the vertical (up and down) and side loads imposed by installation in the aircraft. For example, TSO No. C-39a (and NAS 809) specifies an ultimate down load of 4.0g which is in agreement with the 4.0g emergency landing load factor of § 27.561, but it may be less than the design maneuver load factor (which can be as high as 3.5g limit or 5.25g ultimate).

(i) The 1.33 factor is specified for substantiation of attachments of each seat to the structure and each safety belt or harness to the seat or structure and the head rest, if used, for § 27.561 loads, whether analysis or test is used.

(ii) If static testing of seats, belts, and harnesses is used, the body block of NAS 809 may be used. The corners of the NAS 809 body block may be radiused and padded if it is found that the small radii cause premature, unrealistic crippling of thin wall tubing or other structure used in the static seat.

(iii) The substantiation of the pilot seats is required to include pilot forces of § 27.397 in conjunction with normal flight and ground loads. For example, the pilot foot force (195 pounds ultimate) must be reacted by the seat.

(2) The head rest, if used, shall be substantiated for a head weight of 13 pounds, § 27.561 inertia load factors, and a factor of 1.33 whether by test or analysis.

(3) The following criteria have been found satisfactory for preventing occupant head injuries:

(i) Whenever a harness is used, it should support the shoulders without applying hazardous loads to the side or front of the neck. It should be easily donned and removed. A single point release with the seat belt is required for each pilot's seat and preferred for other seats. If a separate release is provided, it must be simple, compatible with the seat belt release, and near the seat belt release. The harness should be tested in conjunction with the seat belt using a "body block" similar to that of NAS 809, if possible. It shall be tested to 60 percent of the § 27.561 minor crash loads for the entire occupant weight of 170 pounds. TSO-C114, Torso Restraint Systems, dated May 27, 1987, was recently issued.

(ii) During certification TIA testing, the pilot shall ensure that all of the pilot's necessary functions may be performed with the seat in the most adverse adjustable position and the belt and harness fastened. Each belt and harness shall also be secured, when not used, if necessary, to comply with § 27.785(c).

(iii) Elimination of injurious objects within striking distance of the head and other vital parts can be accomplished by removal of objects with sharp edges or rigid surfaces from within striking distance of vital parts of the occupant. Dimensions and weights for typical occupants are available in U.S. Army USAAVLABS Reports 70-22 (August 1969) and 66-39 (June 1966) and NACA Report TN 2991 (August 1953). Because of the range of occupant head striking distance, a combination of "elimination of injurious objects" and "cushioned rests" may be required for some interior configurations. If only a belt or a belt-harness which allows use of only the belt is installed, the minimum arc or strike sphere requirement may be met by establishing a 35-inch minimum radius strike-free zone from the seat back and bottom cushion junction. The cushions may be assumed to be normally compressed.

(iv) An acceptable cushioned rest can be provided by use of a 1-inch thickness of foamed polyvinyl chloride (PVC) or equivalent energy absorbing material. The density of material should be in a 5- to 10-pound per cubic foot density range. PVC foam has the property of absorbing energy efficiently with negligible rebond effects. PVC foam recovers slowly to the original configuration after deformation. If PVC foam is used, however, care must be taken in its application relative to its flammability characteristics (reference § 27.853).

(4) Handholds for the occupants are generally provided by transport aircraft seat backs adjacent to the aisle. If the seat backs fold, the amount of support provided by the seat backs before they fold must be evaluated in a furnished interior or mockup. To provide adequate support, the seat back may use an easily disengaged latch or adequate friction in the hinge mechanism to obtain adequate support. Handholds along the aisle are, of course, not needed for rotorcraft with no aisles or where seat belts must be fastened during flight according to the operating rules.

(5) Projecting objects which could injure occupants in normal flight should be padded. The amount of padding required depends on the location, size, and minimum radius of the projecting object. In general, this requirement may be met by padding sharp edges with one-half inch of PVC foam or equivalent energy absorbing material (5 to 10 lbs. density). Objects with edge radii in excess of 1 inch may meet the requirements of § 29.785(e) with a lesser amount of energy absorbing padding, if it can be contacted only by persons while "seated or moving about in the rotorcraft in normal flight."

AC 27.785A. § 27.785 (Amendment 27-25) SEATS, BERTHS, SAFETY BELTS, AND HARNESSES.

a. Explanation.

(1) The title of § 27.785 now includes berths (which would include litters).

(2) Section 27.785(a) has been revised to include reference to the new § 27.562, "Emergency Landing Dynamic Conditions".

(3) Section 27.785(b) has been revised to include a reference to the new § 27.562(c)(5) head injury criteria and to describe a torso restraint system that is contained in TSO-C114.

(4) Section 27.785(f) has been revised to change the percentage of load distribution of a combined safety belt and harness from 60-60 to 60-40.

(5) A new § 27.785(i) has been added which provides a list of "seating device system" components.

(6) A new § 27.785(j) provides for deformations of the seat energy absorption device system installed to meet the requirements of § 27.562 but requires that the system "remain intact and not interfere with rapid evacuation of the rotorcraft." Further "structural" performance standards are contained in §§ 27.562(c)(1) and (2).

(7) A new § 27.785(k) provides static strength and restraint requirements for litters and berths. Litters may be oriented laterally as well as longitudinally in the rotorcraft. Dynamic tests of litters are not required. For longitudinally oriented litters, features should be provided to protect the occupant from the increased loads in § 29.561(b) of Amdt. 27-25.

b. Procedures. The procedures of paragraph AC 27.785 still apply to static substantiation of the seats, berths, safety belts, and harness. In addition:

(1) Compliance with § 27.562 (except litters are not included) and § 27.561(b) is required.

(2) Section 27.562 includes a specific pass fail criteria, which includes head injury criteria.

(3) Shoulder harnesses need only be substantiated for 40 percent of total occupant load rather than the former 60 percent adopted by Amendment 27-21.

(4) AC paragraph 27.562 provides guidance for evaluating the functioning of a seating energy absorption device system under dynamic test conditions. Stroking is generally associated with the vertical-horizontal impact case and is recognized in the static strength substantiation.

(5) Berths or litters installed within 15° or less of the rotorcraft longitudinal axis (oriented longitudinally) shall use a combination of restraint devices, such as a padded end-board, cloth diaphragm, or equivalent means to withstand and distribute the occupant loads resulting from § 27.561(b) requirements. Other berths or litters may be equipped with straps or safety belts to withstand the forward reaction of § 27.561(b) as well as other loads, including flight loads.

(i) Berths/litters may be substantiated by static load tests, analysis, or a combination thereof and need not be substantiated to the 1.33 fitting factor of seat installations.

(ii) The berth/litter occupant's head, neck, and spine should be protected from (landing) impact forward loads by appropriate design means; e.g.,

- non-longitudinal orientation of the berth/litter; or
- "feet forward" orientation; or
- distribution of an appropriate percentage of forward loads on the shoulders (not solely to the head and spine).

(iii) Recommendations for litter occupant

- If the occupant's head is oriented forward, a shoulder harness should be provided, in conjunction with body and leg straps, that prevents the occupant's head from falling off the litter. A padded end board, diaphragm, etc., may be used, provided head and spinal loads are alleviated or prevented.
- If the occupant's feet are oriented forward, the padded end board may also be used in combination with body and leg straps or other such restraints.

- Multiple or combinations of devices should be used to distribute the occupant loads as well as protect the occupant from possible neck and spine compression.

AC 27.785B § 27.785 (Amendment 27-35) SEATS, BERTHS, LITTERS, SAFETY BELTS, AND HARNESSES.

a. Explanation. Amendment 27-35 revised the title of the rule to now include litters to distinguish from berths. Additionally, § 27.785(k) was revised to require that the 1.33 fitting factor of § 27.625(d) must be applied to the emergency landing loads of § 27.561(b)(3) for the substantiation of attachments of each berth and litter to the structure.

b. Procedures. All of the advisory material pertaining to this section remains in effect with the following additions:

(1) A fitting factor of 1.33 must be applied to the emergency landing loads of § 27.561(b) when evaluating the berth or litter attachment and the occupant restraint system to the structure.

(2) The 1.33 factor is required whether analysis or test is used.

AC 27.787. § 27.787 (Amendment 27-11) CARGO AND BAGGAGE COMPARTMENTS.

a. Explanation.

(1) This standard concerns the strength or structural integrity of either a cargo or baggage compartment. For purposes of this paragraph, baggage and cargo compartments are synonymous. Other design standards are also included.

(2) Fire protection standards of these compartments are contained in § 27.855, paragraph AC 27.855.

(3) The compartment must contain the maximum (design) weight cargo for maximum landing and flight load factors. The minor crash conditions noted in § 27.561 are not applied to cargo compartments. However, a forward ultimate load factor of 4 is applied to the contents of cargo compartments. This forward load condition is related to occupant protection. Compartments forward of the occupant’s compartment may be designed to the appropriate landing load factor (landing with drag and side load).

(4) Features such as straps, nets, ropes, and possibly other means of restraint may be used when necessary to prevent hazardous shifting of cargo as prescribed under flight and landing loads.

(5) Compartment lamps must be protected from possible lamp bulb and cargo contact.

(6) Other than the standards in this section, specific standard design features for cargo compartment doors are not contained in FAR Part 27. The following are recommended design features.

(i) Door latch or lock mechanism should not fail and allow the door to open and should not open as a result of cargo shifting.

(ii) Crewmembers should by visual means such as handle positions and markings determine, when on the ground, that the door is fully locked. A separate signal system may also be used to show a door unlatched condition.

(7) Compartment marking standards such as maximum weight, floor loading, possible tiedown instructions and other appropriate compartment markings or placards are prescribed in § 27.1557(a).

b. Procedures.

(1) The compartment design allowable load, including distributed loading, is determined during the initial design phases of the rotorcraft. For an example, the compartment may have a placarded maximum allowable load of 250 pounds, with an allowable distributed load of 100 pounds per square foot. The compartment maximum load and floor distributed load (allowable pounds per square foot) should be included in a stencil, placard, or equivalent durable marking per § 27.1557(a).

(2) Static tests or analyses may be used for substantiation. Light weight rotorcraft configurations typically should be associated with the most severe flight and landing load factors.

(3) Structural substantiation of the fuselage for flight and landing loads must include the baggage and cargo restraining devices and associated attachment structure. Structural substantiation of the compartment structure must include the 4g ultimate forward load condition of § 27.787(c) in addition to the flight and landing load conditions. These can be handled as separate conditions if the structure is substantiated by analysis. If static tests are conducted, all load conditions must be accounted for. A test plan should be approved and conformity inspections conducted prior to FAA/AUTHORITY witnessing of tests.

(4) Cargo nets or straps installed for compliance with § 27.787(b) must be substantiated for the maximum flight and landing loads. The forward load condition of § 27.787(c) must be proven also. Nets or straps should be adjustable.

(5) Lamp bulbs should be guarded, recessed, or placed in upper inside corners and guarded to prevent contact with cargo and possible bulb breakage or excessive heat.

(6) If the door design recommendations in paragraph AC 27.787a(6) are accepted, these features should be confirmed by design data review and during a compliance inspection. Index or alignment marks with respect to handle (door locked) position are also recommended. If a signal system is used, a switch at the door latch that would signal "door open or unlatched" to the flightcrew is recommended.

AC 27.787A § 27.787 (Amendment 27-27) CARGO AND BAGGAGE COMPARTMENTS.

a. Explanation. Amendment 27-27 adds two subparagraphs to § 27.787(c) which clarify that cargo and baggage compartments should be designed to protect occupants from injury by the compartment contents during emergency landings. This may be done by location or by retention provisions. The new paragraphs also add a requirement that the compartment contents not cause injury when subjected to the loads of § 27.561.

b. Procedures. The procedures of paragraph AC 27.787 are still applicable. In addition to the forward load, the cargo and baggage compartment should be designed to withstand loads in other directions as specified in § 27.561. Also, the compartment may be shown to provide protection of occupants by location; i.e., cargo and baggage compartments may be shown to be located in a position where loose contents will not endanger occupants in an emergency landing impact. If the compartment is located above or behind the occupied area, § 27.561(c) may apply. If a compartment is in the occupied area, § 27.561(b) applies.

AC 27.801 § 27.801 (Amendment 27-11) DITCHING.

a. Explanation.

(1) Ditching certification is accomplished only if requested by the applicant.

(2) Ditching may be defined as an emergency landing on the water, deliberately executed, with the intent of abandoning the rotorcraft as soon as practical. The rotorcraft is assumed to be intact prior to water entry with all controls and essential systems, except engines, functioning properly.

(3) The regulation requires demonstration of the flotation and trim requirements under "reasonably probable water conditions." A sea state 4 is representative of reasonably probable water conditions to be encountered. Therefore, demonstration of compliance with the ditching requirements for at least sea state 4 water conditions satisfies the reasonably probable requirement.

(4) A sea state 4 is defined as a moderate sea with significant wave heights of 4 to 8 feet with a height-to-length ratio of:

(i) 1:12.5 for multiengine rotorcraft with Category A engine isolation (reference paragraph AC 27 MG 3).

(ii) 1:10 for all other rotorcraft.

NOTE: The source of the sea state definition is the World Meteorological Organization (WMO) Table. (See figure AC 27.801-1.)

(5) Ditching certification encompasses four primary areas of concern: rotorcraft water entry, rotorcraft flotation and trim, occupant egress, and occupant survival.

(6) The rule requires that after ditching in reasonably probable water conditions, the flotation time and trim of the rotorcraft will allow the occupants to leave the rotorcraft and enter liferafts. This means that the rotorcraft should remain sufficiently upright and in adequate trim to permit safe and orderly evacuation of all personnel.

(7) For a rotorcraft to be certified for ditching, emergency exits must be provided which will meet the requirements of § 27.807(d).

(8) The safety and ditching equipment requirements are addressed in §§ 27.1411, 27.1415, and 27.1561 and specified in the operating rules (Parts 91, 121, 127, and 135). As used in § 27.1415, the term ditching equipment would more properly be described as occupant water survival equipment. Ditching equipment is required for extended overwater operations (more than 50 nautical miles from the nearest shoreline and more than 50 nautical miles from an offshore heliport structure). However, ditching certification should be accomplished with the maximum required quantity of ditching equipment regardless of possible operational use.

(9) Current practices allow wide latitude in the design of cabin interiors and, consequently, the stowage provisions for safety and ditching equipment. Rotorcraft manufacturers may deliver aircraft with unfinished (green) interiors that are to be completed by the purchaser or modifier. These various “configurations” present problems for certifying the rotorcraft for ditching.

(i) In the past, “segmented” certification has been permitted to accommodate this practice. That is, the rotorcraft manufacturer shows compliance with the flotation time, trim, and emergency exit requirements while the purchaser or modifier shows compliance with the equipment provisions and egress requirements with the completed interior. This procedure requires close cooperation and coordination between the manufacturer, purchaser or modifier, and the FAA/AUTHORITY.

(ii) The rotorcraft manufacturer may elect to establish a “token” interior for ditching certification. This interior may subsequently be modified by a supplemental

type certificate or a field approval. Compliance with the ditching requirements should be reviewed after any interior configuration changes and limitations changed where applicable.

(iii) The Rotorcraft Flight Manual and supplements deserve special attention if a “segmented” certification procedure is pursued.

b. Procedures. The following guidance criteria has been derived from past certification policy and experience. Demonstration of compliance to other criteria may produce acceptable results if adequately justified by rational analysis. Model tests of the appropriate ditching configuration may be conducted to demonstrate satisfactory water entry and flotation and trim characteristics where satisfactory correlation between model testing and flight testing has been established. Model tests and other data from rotorcraft of similar configurations may be used to satisfy the ditching requirements where appropriate.

(1) Water entry.

(i) Tests should be conducted to establish procedures and techniques to be used for water entry. These tests should include determination of optimum pitch attitude and forward velocity for ditching in a calm sea as well as entry procedures for the highest sea state to be demonstrated (e.g., the recommended part of the wave on which to land). Procedures for all-engines-operating, one-engine-inoperative, and all-engines-inoperative conditions should be established. However, only the procedures for the most critical condition (usually all engines inoperative) need to be verified by water entry tests.

(ii) The ditching structural design consideration should be based on water impact with a rotor lift of not more than two-thirds of the maximum design weight acting through the center of gravity under the following conditions:

(A) For entry into a calm sea--

(1) The optimum pitch attitude as determined in AC 27.801(b)(1)(i) with consideration for pitch attitude variations that would reasonably be expected to occur in service;

(2) Forward speeds from zero up to the speed defining the knee of the height-velocity (HV) diagram;

(3) Vertical descent velocity of 5 feet per second; and

(4) Yaw attitudes up to 15°.

(B) For entry into the maximum demonstrated sea state--

(1) The optimum pitch attitude and entry procedure as established in AC 27.801(b)(1)(i);

(2) The forward speed defined by the knee of the HV diagram reduced by the wind speed associated with each applicable sea state;

(3) Vertical descent velocity of 5 feet per second; and

(4) Yaw attitudes up to 15°.

(C) The float system attachment hardware should be shown to be structurally adequate to withstand water loads during water entry when both deflated and stowed and fully inflated (unless in-flight inflation is prohibited). Water entry conditions should correspond to those established in paragraphs AC 27.801(b)(1)(ii)(A) and (B). The appropriate vertical loads and drag loads determined from water entry conditions (or as limited by flight manual procedures) should be addressed. The effects of the vertical loads and the drag loads may be considered separately for the analysis.

(D) Probable damage due to water impact to the airframe/hull should be considered during the water entry evaluations; i.e., failure of windows, doors, skins, panels, etc.

(E) The ditching maximum demonstrated sea state for water entry is the same or greater than the maximum demonstrated sea state for flotation and trim.

(2) Flotation Systems.

(i) Normally inflated. Fixed flotation systems intended for emergency ditching use only and not for amphibian or limited amphibian duty should be evaluated for:

(A) Structural integrity when subjected to:

(1) Air loads throughout the approved flight envelope with floats installed;

(2) Water loads during water entry; and

(3) Water loads after water entry at speeds likely to be experienced after water impact.

(B) Rotorcraft handling qualities throughout the approved flight envelope with floats installed.

(ii) Normally deflated. Emergency flotation systems which are normally stowed in a deflated condition and inflated either in flight or after water contact during an emergency ditching should be evaluated for:

(A) Inflation. The float activation means may be fully automatic or manual with a means to verify primary actuation system integrity prior to each flight. If manually inflated, the float activation switch should be located on one of the primary flight controls. These activation means should be safeguarded against spontaneous or inadvertent actuation for all flight conditions.

(1) The inflation system design should minimize the probability of the floats not inflating properly or inflating asymmetrically. This may be accomplished by use of a single inflation agent container or multiple container system interconnected together. Redundant inflation activation systems will also normally be required. If the primary actuation system is electrical, a mechanical backup actuation system will usually provide the necessary reliability. A secondary electrical actuation system may also be acceptable if adequate electrical system independence and reliability can be documented.

(2) The inflation system should be safeguarded against spontaneous or inadvertent actuation for all flight conditions. It should be demonstrated that float inflation at any flight condition within the approved operating envelope will not result in a hazardous condition unless the safeguarding system is shown to be extremely reliable. One safeguarding method that has been successfully used on previous certification programs is to provide a separate float system arming circuit which must be activated before inflation can be initiated.

(3) The maximum airspeed for intentional in-flight actuation of the float system and for flight with the floats inflated should be established as limitations in the RFM unless in-flight actuation is prohibited by the RFM.

(4) The inflation time from actuation to neutral buoyancy should be short enough to prevent the rotorcraft from becoming more than partially submerged assuming actuation upon water contact.

(5) A means should be provided for checking the pressure of the gas storage cylinders prior to takeoff. A table of acceptable gas cylinder pressure variation with ambient temperature and altitude (if applicable) should be provided.

(6) A means should be provided to minimize the possibility of overinflation of the float bags under any reasonably probable actuation conditions.

(7) The ability of the floats to inflate without puncture when subjected to actual water pressures should be substantiated. A full-scale rotorcraft immersion demonstration in a calm body of water is one acceptable method of substantiation.

Other methods of substantiation may be acceptable depending upon the particular design of the flotation system.

(B) Structural Integrity. The flotation bags should be evaluated for loads resulting from:

(1) Airloads during inflation and fully inflated for the most critical flight conditions and water loads with fully inflated floats during water impact for the water entry conditions established under paragraph AC 27.801(b)(1)(ii) for rotorcraft desiring float deployment before water entry; or

(2) Water loads during inflation after water entry.

(C) Handling Qualities. Rotorcraft handling qualities should be verified to comply with the applicable regulations throughout the approved operating envelopes for:

(1) The deflated and stowed condition;

(2) The fully inflated condition; and

(3) The in-flight inflation condition. For float systems which may be inflated in flight, rotorcraft controllability should be verified by test or analysis assuming the most critical float compartment fails to inflate.

(3) Flotation and Trim. The flotation and trim characteristics should be investigated for a range of sea states from zero to the maximum selected by the applicant and should be satisfactory in waves having height/length ratios of 1:12.5 for multiengine rotorcraft with Category A engine isolation and 1:10 for all other rotorcraft. Model tests in a wave basin on a number of different rotorcraft types have indicated that an improvement in sea keeping, response of the rotorcraft to waves, performance of approximately one sea state can consistently be achieved by fitting float scoops. If the basic flotation system (without scoops) has demonstrated compliance with the minimum flotation and trim requirements, credit for float scoops to achieve stability in more severe water conditions may be allowed. However, the effect of scoops on improved sea keeping must be demonstrated during model testing.

(i) Flotation and trim characteristics should be demonstrated to be satisfactory to at least sea state 4 conditions.

(ii) Flotation tests should be investigated at the most critical rotorcraft loading condition.

(iii) Flotation time and trim requirements should be evaluated with a simulated, ruptured deflation of the most critical float compartment. Flotation characteristics should be satisfactory in this degraded mode to at least sea state 2 conditions.

(iv) A sea anchor or similar device should not be used when demonstrating compliance with the flotation and trim requirements but may be used to assist in the deployment of liferafts. If the basic flotation system has demonstrated compliance with the minimum flotation and trim requirements, credit for a sea anchor or similar device to achieve stability in more severe water conditions (sea state, etc.) may be allowed if the device can be automatically, remotely, or easily deployed by the minimum flightcrew.

(v) Probable rotorcraft door/window open or closed configurations and probable damage to the airframe/hull (i.e., failure of doors, windows, skin, etc.) should be considered when demonstrating compliance with the flotation and trim requirements.

(4) Float System Reliability. Reliability should be considered in the basic design to ensure approximately equal inflation of the floats to preclude excessive yaw, roll, or pitch in flight or in the water.

(i) Maintenance procedures should not degrade the flotation system (e.g., introducing contaminants which could affect normal operation, etc.).

(ii) The flotation system design should preclude inadvertent damage due to normal personnel traffic flow and excessive wear and tear. Protection covers should be evaluated for function and reliability.

(iii) Float design should provide a means to minimize the likelihood of damage or tear propagation between compartments. Single compartment float designs should be avoided.

(iv) Where practical, design of the flotation system should consider the likely effects of an uncontrolled water entry and locate system components away from the major effects of structural deformity.

(v) Visual identification of the helicopter following a ditching (and possible capsize) is made easier by the choice of material for the construction of the floats that has high visual conspicuity properties.

(5) Occupant Egress and Survival. The ability of the occupants to deploy liferafts, egress the rotorcraft, and board the liferafts should be evaluated. For configurations which are considered to have critical occupant egress capabilities due to liferaft locations and/or ditching emergency exit locations and floats proximity, an actual demonstration of egress may be required. When a demonstration is required, it may be conducted on a full-scale rotorcraft actually immersed in a calm body of water or using

any other rig/ground test facility shown to be representative. The demonstration should show that floats do not impede a satisfactory evacuation. Service experience has shown that it is possible for occupants to have escaped from the cabin but have not been able to board a liferaft and have had difficulties finding handholds to stay afloat and together. Where practical, handholds or lifelines should be provided. The normal attitude of the rotorcraft and the possibility of a capsize should be considered when locating the handholds or lifelines.

(6) Rotorcraft Flight Manual. The Rotorcraft Flight Manual is an important element in the approval cycle of the rotorcraft for ditching. The material related to ditching may be presented in the form of a supplement or a revision to the basic manual. This material should include:

(i) The information pertinent to the limitations applicable to the ditching approval should include the range of sea state conditions that has been demonstrated for water entry and flotation stability. If the ditching approval is obtained in a segmented fashion (i.e., one applicant performing the aircraft equipment installation and operations portion and another designing and substantiating the liferaft/lifevest and ditching safety equipment installations and deployment facilities), the RFM limitations should state “Not Approved for Ditching” until all segments are completed. The requirements for a complete ditching approval not yet completed should be identified in the “Limitations” section.

(ii) Procedures and limitations for flotation device inflation.

(iii) Recommended rotorcraft water entry attitude, speed, and wave position.

(iv) Procedures for use of emergency ditching equipment.

(v) Procedures for ditching egress and raft entry.

(vi) Information stating the flotation system has been certificated for Ditching (as opposed to Emergency Flotation) to facilitate compliance with operational requirements.

AC 27.801-1

SEA STATE CODE

(WORLD METEOROLOGICAL ORGANIZATION)

Sea State Code	Description of Sea	Significant Wave Height Meters	Significant Wave Height Feet	Wind Speed Knots
0	Calm (Glassy)	0	0	0-3
1	Calm (Rippled)	0 to 0.1	0 to 1/3	4-6
2	Smooth (Wavelets)	0.1 to 0.5	1/3 to 1 2/3	7-10
3	Slight	0.5 to 1.25	1 2/3 to 4	11-16
4	Moderate	1.25 to 2.5	4 to 8	17-21
5	Rough	2.5 to 4	8 to 13	22-27
6	Very Rough	4 to 6	13 to 20	28-47
7	High	6 to 9	20 to 30	48-55
8	Very High	9 to 14	30 to 45	56-63
9	Phenomenal	Over 14	Over 45	64-118

NOTES:

(1) The Significant Wave Height is defined as the average value of the height (vertical distance between trough and crest) of the largest one-third of the waves present.

(2) Maximum Wave Height is usually taken to be 1.6 x Significant Wave Height; e.g., Significant Wave Height or 6 meters gives Maximum Wave Height of 9.6 meters.

(3) Winds speeds were obtained from Appendix R of the “American Practical Navigator” by Nathaniel Bowditch, LL.D.; Published by the U.S. Naval Oceanographic Office, 1966.

AC 27.805 § 27.805 (Amendment 27-37) FLIGHT CREW EMERGENCY EXITS.

a. Explanation.

(1) Amendment 27-37 increases the maximum gross weight of a normal category rotorcraft from 6000 pounds to 7000 pounds and adds a passenger seat limitation of nine. In conjunction with the weight and passenger limitation and to support a potential increase of passengers, § 27.805 was added that required flight crew emergency exits when passenger exits are not convenient. The placement of litters, cargo, or bulkheads may prevent passenger exits from being convenient to the flight crew. Flight crew exits, if required, are to be of sufficient size and located on both sides of the rotorcraft (or one top hatch) to allow "rapid evacuation of the flight crew." This must be shown by test(s) to demonstrate compliance.

(2) If equipped with emergency flotation devices, the rule requires that the water or flotation devices do not obstruct the flight crew emergency exits after an emergency landing on water. This must be shown by test, demonstration, or analysis.

b. Procedures.

(1) Flight crew emergency exits, if required, may consist of one overhead hatch or two side exits (one on either side). The size is not explicitly defined except that it be "of sufficient size . . . to allow rapid evacuation of the flight crew". The ability for "rapid evacuation" is to be demonstrated by tests. For side exits located immediately adjacent to the crew seat and exceeding an unobstructed opening that provides a 19- by 26-inch ellipse (§ 27.807) in size, the test demonstration can be accomplished by normal use and evaluation of the exits by the certification authority during Type Inspection Authorization (TIA) testing. For any overhead exit or side of fuselage exits not meeting the 19- by 26-inch ellipse dimensions, a special demonstration test should be accomplished. This demonstration should show that 2.5 percentile to 97.5 percentile men could egress rapidly through the crew exit(s), i.e., men 5 feet 4 inches to 6 feet 5 inches in height and up to 225 pounds in weight, based on the Civil Aeromedical Institute's (CAMI) 1998 Aeromedical Certification Statistical Handbook. If an overhead hatch type exit is utilized, on conventional rotorcraft designs, hazards associated with the proximity of rotor blades should be considered.

(2) The tests, demonstrations, or analysis required by § 27.805(c) for flight crew exits are analogous to those of § 27.807(a)(3) except the crew exit threshold may be slightly below the water line but should not obstruct use of the exit. Tests in water (tanks or large bodies of water) or demonstrations in the laboratory may be used for compliance if the deflections of flotation devices relative to the exits are accurately or conservatively achieved.

AC 27.807. § 27.807 (Amendment 27-21) EMERGENCY EXITS.

a. Explanation. The specified emergency exits are as follows:

(1) Quantity, size, and location.

(i) For typical operations.

Passenger Seating Capacity	Main Door (MD) Side	Side Opposite Main Door
1 through 15	MD	(1) 19- by 26-inch ellipse
More than 15	MD + additional exit(s)	(1) 19- by 26-inch ellipse + additional exit(s)

(ii) For overwater operations (if ditching certification is requested), one 19- by 26-inch elliptical exit on each side of the fuselage above the waterline.

(iii) Section 27.807(a) was revised by Amendment 27-21 on November 6, 1984, to remove any reference to the seating capacity in excess of 15 seats. For further information, see Amendment 29-21 which, in part, amended § 29.1 on January 31, 1983.

(2) In addition to quantity and size of exits, the rule specifies the following:

(i) The 19- by 26-inch ellipse portion of the exit is to be unobstructed.

(ii) The exits are to be readily accessible.

(iii) The exits must have a simple and obvious method of opening.

(iv) The exits must be readily located and operated in darkness.

(v) The exits must be protected from jamming by fuselage deformation.

b. Procedures.

(1) The quantity and minimum size of exits will be as specified.

(2) Access to the exits will be provided by aisles, break-over seatbacks, or other features as appropriate. If access is questionable, a demonstration shall be conducted to assess the means of access.

(3) The location and operation of the exits should be evaluated in total darkness.

(4) Protection from jamming is normally provided by clearances between the fuselage exit frame and the exit or by exit designs which are basically insensitive to fuselage deformation. NASTRAN or similar analysis methods have been used in the

past to obtain the effects of fuselage deformation on exit clearances during minor crash landings.

AC 27.807A. § 27.807 (Amendment 27-26) EMERGENCY EXITS.

a. Explanation. Amendment 27-26 added § 27.807(d)(3) which requires proof that all rotorcraft ditching configuration exits will also be free of interference from emergency flotation devices, whether stowed or deployed (inflated).

b. Procedures. All of the policy material pertaining to this section remains in effect with the following additions:

(1) Test, demonstration, compliance inspection, or analysis is required to show the “ditching” exits are free from interference from stowed/deployed emergency flotation devices. In the event an analysis is insufficient or a given design is questionable, a demonstrating may be required. The demonstration would consist, as a minimum, of an accurate, full-size replica (or representation) of the rotorcraft and of the flotation devices both before, during, an after their deployment.

(2) The type inspection authorization may be used to perform a detailed compliance evaluation utilizing a full-scale rotorcraft in calm water.

(3) Designs may be accepted “by compliance visual inspection” if location of exit and flotation devices relative to each other ensure that interference is impossible. In this case, a demonstration is unnecessary.

AC 27.807B § 27.807 (Amendment 27-37) EMERGENCY EXITS.

a. Explanation.

(1) Amendment 27-37 increases the maximum gross weight of a normal category rotorcraft from 6000 pounds to 7000 pounds and adds a passenger seat limitation of nine. In conjunction with the weight and passenger limitation and to support a potential increase of passengers, § 27.807 was completely rewritten to include the previous requirements but was revised to require at least one emergency exit on each side of the cabin readily accessible for each passenger. This is required regardless of whether the rotorcraft has a closed cabin or is ditching certified. In addition, at least one of the required exits must be usable in any probable attitude that may result from a crash. Doors intended for use during normal operations may also serve as emergency exits provided these doors comply with requirements specified for emergency exits..

(2) Each emergency exit must provide an unobstructed minimum opening equivalent to a 19-inch x 26-inch ellipse. The methods of opening or operating the emergency exit must be simple and obvious from both inside and outside the rotorcraft.

(3) If equipped with emergency flotation devices, the revised rule still requires that the water or flotation devices do not obstruct the emergency exits whether stowed or deployed and the emergency exits must be above the water line. This must be shown by test, demonstration, or analysis. In addition, if certification with ditching provisions is requested, § 27.807(d) requires the emergency exit markings must remain visible if the rotorcraft is capsized and the cabin is submerged.

b. Procedures. The advisory material pertaining to this section is still in effect with the following additions.

(1) There must be at least one emergency exit on each side of the rotorcraft. As a minimum, one of these exits must be usable in any probable attitude that may result from a crash.

(2) Each emergency exit must provide an unobstructed opening that is equivalent to a 19-inch x 26- inch ellipse. Each emergency exit must have simple and obvious methods of opening from the inside and the outside of the rotorcraft.

(3) Emergency exits are arranged and marked so that they are readily located and opened, even in darkness, and that they are reasonably protected from jamming by fuselage deformation.

(4) Functional tests of each emergency exit must be performed.

(5) If emergency flotation devices are installed, then tests, demonstration, or analysis are required to show that each emergency exit used for a ditching exit is above the water line and will open without interference from flotation devices, whether stowed or deployed. In addition, the required emergency exit markings must remain visible if the rotorcraft is capsized and the cabin is submerged.

AC 27.831. § 27.831 VENTILATION.

a. Explanation.

(1) This rule specifies minimum ventilation requirements for each passenger and crew compartment. The passenger and crew compartments are required to be free from harmful or hazardous concentration of gases or vapors, and specifically for carbon monoxide, its concentration may not exceed 1 part in 20,000 parts of air during forward flight or hovering in still air.

(2) Failure conditions must also be considered when evaluating the ventilation system, and § 27.1309 is used to cover these aspects. Malfunctions concerning the ventilation system are covered here to make the discussion complete in one paragraph.

(3) This system becomes more significant when engine bleed air is used for conditioning of the passenger and crew compartment's air. Certain data are necessary in order to analyze properly the bleed air provided under normal and malfunction conditions. The airframe manufacturer can normally look to the engine manufacturer for a specification of the maximum amount of air that can be extracted and the temperature of the extracted air. The engine manufacturer also normally provides a failure analysis that identifies ways the bleed air can be contaminated and the associated oil flow rates under each failure condition. The oil manufacturers are in a position to provide information regarding breakdown of the oil under different temperature conditions and the impact of that breakdown on the quality of the air being provided to the passenger and crew compartments.

b. Procedures.

(1) The passenger and crew compartments should be monitored under normal operating conditions for the presence of carbon monoxide. A carbon monoxide test kit is normally used for this evaluation. Air is monitored around crew stations, and outlets and different combinations of windows closed/open, heat off/on, air-conditioner off/on, etc., are checked to ensure all conditions are evaluated.

(2) When engine bleed air is used to condition the passenger and crew compartment's air, it should be initially substantiated that under normal operation, the amount of air being extracted does not exceed the limit established by the engine manufacturer. To accomplish this, determine the flight condition that will give the maximum bleed air flow through the flow limiter (venturi). The flow calculations should use this maximum flow condition and should also be made using the maximum tolerance diameter of the venturi throat.

(3) The engine bleed air should also be evaluated under malfunction conditions to determine a worst-case air contamination condition. (A typical worst-case malfunction is for an oil seal to fail in the engine that allows the engine oil supply to be introduced into the airflow.) With information regarding the contaminant, flow rate calculations can be made to predict the contamination levels that will be reached in the passenger and crew compartments and also the associated time duration of passenger and crew exposure. The severity of the exposure to the contaminated air is related to the temperature of the oil when it is introduced into the airflow. For example, synthetic base oils manufactured to MIL-L-7808 or MIL-L-23699 begin to break down into toxic components when the temperature exceeds 300° C (572° F). The oil manufacturers have evaluated this problem and should be in a position to provide data regarding the amount and type of toxic components to be expected, and the effect of introducing those components into the passenger and crew compartments. Therefore, from information supplied by the engine manufacturer, the worst-case air contamination condition can be calculated, and this can be compared with results of the oil manufacturers' tests to determine if the concentrations are harmful or hazardous.

AC 27.833. § 27.833 (Amendment 27-23) HEATERS.

a. Explanation.

(1) Amendment 27-23 added § 27.833 for combustion heaters which is derived from the lead-in paragraph of § 27.859(c) which relates to the fire protection requirements for fuel heaters. Section 27.833 was needed to facilitate the extensive changes made to § 27.859 and to achieve parallel rule construction with Part 29. This will ensure that all combustion heaters will be approved whether as a part of the type design or as a TSO approved combustion heater.

(2) Section 27.833 requires that each combustion heater be approved. The standard contains no provisions regarding functioning of the system, environmental considerations, or malfunctions; therefore, the provisions of §§ 27.1301 and 27.1309 should be used to evaluate those aspects of an installation. The ventilation provisions of § 27.831 should be considered as well as the fire protection and installation provisions of § 27.859.

b. Procedures.

(1) Technical Standard Order, TSO-C20, was issued June 15, 1949, and amended on April 16, 1951, and concerns combustion heaters. If a heater chosen for installation is qualified to the provisions of TSO-C20, it may be approved. If a unit is not TSO qualified, a qualification program for the heater itself in conjunction with the installation should be established. This program under the type design change procedures should be equal or equivalent to provisions of the TSO-C20.

(2) The TSO refers to the SAE Aeronautical Standard, AS 143B, which specifies the use of certain additional devices, design features, air supply considerations, performance tests, safety controls, environmental considerations, and so forth. Compliance with all of the provisions of the Aeronautical Standard should result in an approved unit; however, it will not necessarily result in a satisfactory installation. For environmental considerations, an environmental spectrum more suitable to rotorcraft may be used by referring to the latest version of Document No. RTCA/DO-160, Environmental Conditions and Test Procedures for Airborne Equipment, rather than the older AS 143B. Similarly, other specifications may also be satisfactory for compliance with the standard.

(3) The heater system installation evaluation should also consider functioning of the system based upon the provisions of § 27.1301 (see paragraph AC 27.1301). Section 27.1309(a) is the regulatory basis for also considering environmental conditions (see paragraph AC 27.1309). The expected environmental conditions resulting from the particular rotorcraft installation should be compared to those specified in the TSO. If the conditions derived for § 27.1309 are not met, additional environmental considerations are appropriate. The provisions of § 27.1309(b) should be used to evaluate the possible malfunctions of the installed system. Such an evaluation should be

documented in a fault analysis. The air quality provisions of § 27.831 apply since certain standards of “ventilation air quality,” under normal and malfunction conditions, should comply (see paragraph AC 27.831). The provisions of § 27.859 apply. See paragraph AC 27.859 for information.

SUBPART D - DESIGN AND CONSTRUCTION

FIRE PROTECTION

AC 27.853 § 27.853 (Amendment 27-17) COMPARTMENT INTERIORS.

a. Explanation.

(1) Crew and passenger compartments must have materials that are at least flash resistant or flame resistant as prescribed for the application cited in the standard.

(2) Whenever smoking is allowed, self-contained, removable ashtrays must be provided as stated. A placard or placards, if needed, may be used to prohibit smoking at all times in the crew and passenger compartment. If smoking is allowed, illuminated “no smoking” signs are required. The signs shall meet prescribed standards for passenger compartments that are separate from the flightcrew. Integral crew and passenger compartments (of smaller rotorcraft) do not require illuminated signs since oral commands or instructions from the flightcrew are sufficient.

(3) Amendment 27-17 revised paragraph (c) of § 27.853 by adding the standards for the “no smoking” illuminated signs that must be controllable by the flightcrew. Amendment 29-18 added the same standards for FAR Part 29 transport rotorcraft. The standard requires at least one illuminated sign for use in daylight as well as night in passenger compartments that are separate from the crew compartment. The sign shall be legible to each seated passenger. If forward and aft facing seats are installed, signs for each seat orientation may be needed as prescribed.
Section 29.853(c) of Amendment 29-18 is the same standard as § 27.853(c) of Amendment 27-17.

(4) Advisory Circular 23-2, Flammability Tests, August 20, 1984, provides historical background of the regulatory standards for flash resistant, flame resistant, fire resistant, and fireproof materials. The procedures in AC 23-2 may be used for FAR Part 27 standards. Section 27.853 does not impose standards for mandatory use of self-extinguishing materials. Nevertheless, the FAA/AUTHORITY encourages and recommends use of self-extinguishing interior materials that comply with § 29.853 of Amendment 29-17.

(5) Flammability standards for certain electrical wires or cables are specified in § 27.1365. See paragraph AC 27.1365 for information about electrical wires.

b. Procedures.

(1) Aircraft interior materials including consoles, cabinets, etc., are subject to the standards.

(2) Advisory Circular 23-2 may be referred to in preparation of test proposals for flammability tests of interior materials.

(3) A placard prohibiting smoking may be used if ashtrays are not provided. If ashtrays are provided, an adequate number shall be provided, and the installation must have an inner fire resistant liner to close off the ashtray cavity or receptacle when the ashtray is removed.

(4) All illuminated “no smoking” sign or signs must be used when prescribed. Flightcrew must be able to control illumination of the signs.

(5) If a hand-held fire extinguisher is installed to comply with an operating rule, Advisory Circular 20-42C, Hand Fire Extinguishers for Use in Aircraft, contains acceptable information about hand-held fire extinguishers.

AC 27.853A § 27.853 (Amendment 27-37) COMPARTMENT INTERIORS.

a. Explanation. Amendment 27-37 requires all materials in the cabin area to be flame resistant. Section 27.853(b) is now reserved, as the flammability requirements are not dependent on interior material location or function.

b. Procedures. The procedures of paragraph AC 27.853 still apply to the flammability requirements of interior materials except all interior materials must be flame resistant.

AC 27.855 § 27.855 CARGO AND BAGGAGE COMPARTMENTS.

a. Explanation.

(1) Cargo and baggage compartments must be constructed of or lined with--

(i) Fire resistant material; or

(ii) Flame resistant material for compartments readily accessible to the crew while in flight.

(2) A liner or a separately constructed compartment shall protect the aircraft structure from significant loss of strength in the event of a compartment fire.

(3) Whenever essential or critical controls, wiring, lines, etc., are located in a compartment, they must be protected as prescribed.

(4) For historical reference, this design standard was adopted in 1953 by Amendment 6-4 to CAR Part 6 for normal category rotorcraft and adopted into FAR Part 27. The expressed interest, paraphrased from the preamble for the

amendment, is to provide protection from a compartment fire to a degree which will ensure that a controlled autorotational landing can be made during a period of at least 5 minutes after start and detection of a fire. No distinction was made for twin-engine rotorcraft. A distinction was made between accessible and inaccessible compartments.

(5) It is recommended that tiedown straps or nets, if installed, should be made of material that is at least flame resistant.

(6) Reference is made to § 27.853 and paragraph AC 27.853 for flammability standards of certain materials.

b. Procedures.

(1) For a compartment accessible in flight, a flame resistant liner, box, or closure of the compartment is required. For an inaccessible compartment, a fire resistant liner, an aluminum inner skin, box, or closure of the compartment is required. Advisory Circular 23-2, Flammability Tests, provides information about material flammability tests.

(2) Only fire resistant material may be used in inaccessible compartments. Carpets and wall coverings may not be used.

(3) Flame resistant materials may be used on floors, walls, and ceilings of accessible compartments.

(4) Although not specified in the standards, it is recommended that tiedown nets or straps comply with the self-extinguishing flammability standards of § 29.853(a)(3). Cargo compartment blankets or covers should comply with the flammability standards of § 29.853(a)(2). However, it is acceptable to use tiedown equipment that meets the flame resistant material standard.

(5) It is recommended that compartments use design features that seal the compartment and prevent airflow into (or out of) the compartment. The objective is to limit the air supply to a potential fire.

(6) Controls, wiring, equipment, and accessories should not be routed through, mounted in, or exposed to the compartment. If these items, as described in § 27.855(b), are in the compartment, they should be protected by a cage or rigid housing adequate to protect the items. To maintain the compartment integrity for fire containment, it may be necessary to separate these items from the compartment by an appropriate fire resistant or flame resistant housing or enclosure.

AC 27.859 § 27.859 (Amendment 27-23) HEATING SYSTEMS.

a. Explanation. This regulation ensures that onboard heating systems (of all type designs) are safe during normal and survivable emergency operations. Thus, as a minimum, each heating system type design must meet the applicable requirements of § 27.859.

b. Definitions.

(1) Backfire. An improperly timed detonation (or explosion) of a fuel mixture which results in higher than normal temperatures and pressures.

(2) Reverse flame propagation. An event that occurs when the flame from a controlled combustion process (such as a heater) goes in an abnormal path (i.e., either a reverse or different path than the intended path) as a result of a change in internal pressure or internal pressure gradient (e.g., a backfire) from a detonation or a similar event.

(3) Safe distance. A maximum flow length dimension determined from the thermodynamics of a worse case flow reversal (backfire) and the local heater system geometry.

(4) Heater zone (or region). A geometric zone defined by the heater type, heater size, location of heater system components, and the maximum safe distance determined under (3) above. The heater system components may affect the heater zone's size if they are closely located to the heat source. For example a heater fuel tank would not be part of the heater zone if it were located far away from the zone boundary; however, if it were adjacent or close to the boundary, it would be included in the heater zone.

(5) Fireproof. Fireproof is defined in § 1.1 "General Definitions."

(6) Severe Fire. The following thermodynamic definitions are based on AC 20-135, "Powerplant Installation and Propulsion System Component Fire Protection Test Methods, Standards, and Criteria" and on the definitions in § 1.1 for fire resistant and fireproof materials. These definitions are provided for analytical purposes. A severe fire, when used with respect to fireproof materials, is one which reaches a steady state temperature of 2,000 ±150° F for at least 15 minutes. A severe fire, when used with respect to fire resistant materials, is one which reaches a steady state temperature of 2,000 ±150° F for at least 5 minutes.

(7) Hazardous accumulation of water or ice. An accumulation of water or ice that causes a device to not perform its intended function in either normal operation or a survivable emergency situation.

c. Procedures. When suitable data is available, the heating system design should be thoroughly reviewed to determine which system components and arrangements must comply with each subsection of § 27.859. The method-of-compliance relative to each subsection of § 27.859 should then be determined. Acceptable, but not the only, methods of compliance are discussed on a section-by-section basis as follows.

(1) For compliance with § 27.859(a), mechanical devices such as shrouds or barriers should be used to create a double walled (fail-safe) condition, i.e., two equal barrier failures must occur to allow carbon monoxide to mix with cabin air. Phased inspections to ensure continued airworthiness should be considered, as well. The purpose of these measures is to eliminate any system leakage that would allow carbon monoxide (a poisonous gas) to enter occupied areas, incapacitate the crew or passengers and cause a crash. Regardless of the method-of-compliance chosen, periodic checks should be performed during certification using carbon monoxide detection equipment to certify the leak-free integrity of the system. Several such checks should be done during flight test, especially after rigorous maneuvers, to ensure no leakage.

(2) For compliance with § 27.859(b), heat exchangers should meet the requirements of paragraph AC 27.1123, and be readily inspectable either by complete disassembly or by use of other equivalent design maintenance provisions (such as removable inspection covers). Inspectability should be demonstrated during certification by a design review, an inspection demonstration or a combination.

(3) For compliance with § 27.859(c), combustion heater designs, their installations and their heater zones must be identified and thoroughly evaluated. The most direct method of compliance for the heater, itself, is to procure units that already have internal design features that meet the relevant requirements of this section; otherwise, design features must be provided and evaluated during certification that meet these same requirements. Several combustion heaters are approved under TSO-C20 provides the procurement sources and the detailed approval standards for these combustion heaters. Each heater, its installation, and its heater zone should be reviewed against the criteria of §§ 27.1183, 27.1185, 27.1189, and 27.1191 (reference paragraphs AC 27.1183, AC 27.1185, AC 27.1189, and AC 27.1191) to ensure compliance. Next, the fire detector installation drawings and specifications should be reviewed for each heater region. The review should consider all reasonable hazards and failure modes of the heater and the detection system. If not previously TSO approved the detectors should be evaluated during the overall system certification effort. The drainage and venting system for each heater installation should be reviewed to ensure that areas of fuel or fuel vapor collection are properly drained or vented. The capacity of each drain or vent should be determined and, unless impracticable, the flow capacity should be a minimum of 3-to-1 over the worst case leakage anticipated (including the adverse effects of surface tension). Finally, the drainage and ventilation systems should be reviewed to ensure that discharges do not create external hazards by entering or contacting external ignition sources such as engine inlets and hot exhausts. If an accurate determination cannot be made by a design review, ground

and/or flight test work with dyed, inert fluids or vapors should be conducted to accurately display discharge patterns.

(4) For compliance with § 27.859(d), the ventilating air duct design should be reviewed to determine what ducts are routed through heater zones. Once this has been determined, each duct section running through the heater zone should be made fireproof by either using a fireproof shroud around the existing duct or by using fireproof material for the duct wall.

(5) For compliance with § 27.859(e), any design using combustion air ducts should be reviewed to ensure that the ducts are either made from fireproof material or shrouded with a fireproof shroud over a safe distance (see definition). The safe distance should be determined analytically, by test, or a combination, if the analytical results are not conclusive. The design should be reviewed to ensure that combustion air ducts are not connected to the ventilating air stream, except when an equivalent safety finding can be made that shows backfires or reverse burning cannot induce flames or fumes into the ventilating air stream under any failure condition or malfunction of the heater or its associated components. Such a finding should require analysis, testing, or a combination for a proper determination.

(6) For compliance with § 27.859(f), the design and installation of all standard control components, control tubing and safety controls should be reviewed to determine the probable points of water or ice accumulation (e.g., sumps, rough surfaces, joints, etc.) If a design review cannot accurately determine these accumulation points, then bench tests and flight tests should be conducted for proper determination. Once these points are identified, the ability of the effected part (or parts) to perform its intended function when water or ice has fully accumulated must be determined for both normal and failure conditions. If the part (or parts) either has not lost its ability to function: has lost only part of its ability to function; or has lost all of its ability to function; and the entire system's function is not impaired, then nothing further should be required. However, if the overall system's function is hazardously impaired or lost, as a result of water or ice accumulation on a part (or parts), then rectifying design improvements should be made prior to final approval. These improvements should either alter the part's environment (e.g., relocation, enclosure, insulation, etc.) or eliminate the hazardous accumulation of water or ice (e.g., provide drainage, better sealing, better location, different surface finish, etc.).

(7) For compliance with § 27.859(g), combustion heaters, if used, must have separate, independent safety controls from their standard controls (e.g., air temperature, air flow, fuel flow, etc.) which are remotely located in case of a heater fire, are operable by the crew and automatically shut off the ignition and fuel supply when a hazardous condition exists (as defined by § 27.859(g)). These separate safety controls must comply with § 27.859(g)(1), must keep the heater off until restarted by the crew or ground maintenance, and must warn the crew when an essential heater is automatically shut down. The safety control system design should be thoroughly reviewed and tested to ensure that it complies and that no hazardous failure modes exist.

(8) For compliance with § 27.859(h), each combustion and ventilating air intake's location should be identified, reviewed, and tested to ensure that no flammable fluids or vapors can enter the heater system, ignite and create a fire. If a combustion or ventilating air intake's location is critical or questionable, it should be relocated, shielded, drained, or other equivalent means provided to eliminate the potential fire hazard. If engineering analysis and evaluation are not adequate to make an acceptable safety finding, testing using dyed, inert, leaked fluids or vapors should be conducted.

(9) For compliance with § 27.859(i), each heater exhaust system design should be reviewed, tested, or a combination to ensure proper compliance with § 27.1121 and § 27.1123 (reference AC paragraphs AC 27.1121 and AC 27.1123, respectively). Each exhaust shroud should be sealed to ensure that leaked flammable fluids or vapors do not contact the hot exhaust and cause a fire. The seal design should be reviewed to ensure that the sealing material is fireproof, is chemically compatible with the relevant fuels and vapors, is durable and is functionally adequate. If the design review is not conclusive for compliance purposes, then the seal system should be bench tested under pressure while undergoing critical service loads and motions to ensure no leakage occurs. An analysis should be conducted to determine the structural effects on the exhaust system of the worse case restricted backfire (typically a shock wave analysis can be used to determine the peak internal pressure and, the resultant load on the exhaust system.) If structural failure would occur, based on the analysis, either the backfire restriction should be reduced or the exhaust design should be structurally improved to eliminate the failure.

(10) For compliance with § 27.859(j), each heater's fuel system design must be reviewed to ensure that compliance with the powerplant fuel system requirements of Part 27 that are necessary for safe operation to be achieved. An equivalent safety finding should be made if an application is received that requests partial compliance or non-compliance with the powerplant fuel system requirements of Part 27. The finding should ensure that the safety intent of § 27.859(j) is achieved. Analysis, engineering evaluation, testing, or a combination should be used to substantiate the heater fuel system design. Heater fuel system components that, by leakage or other failures, can induce flammable fluids or vapors into the ventilating air stream should be shrouded by drainable, fireproof shrouds.

(11) For compliance with § 27.859(k), the drain system design should be reviewed to identify parts that may be subjected to high temperature and parts that may be subjected to hazardous ice accumulation in service. The high temperature parts should be evaluated using the methods of compliance for heater exhausts (reference paragraph AC 27.859b(9), above and paragraph AC 27.1123). Drains that would be stopped up from ice accumulation should be protected by relocation, size, shields, heating, or a combination to ensure hazardous fluids and vapors are properly drained away.

AC 27.861 § 27.861 FIRE PROTECTION OF STRUCTURE, CONTROLS, AND OTHER PARTS.

a. Explanation.

(1) As stated in the rule, parts essential to a controlled landing that would be affected by a powerplant fire are to be protected so they can perform their essential functions for at least 5 minutes under any foreseeable powerplant fire condition.

(2) To achieve the objective of the rule, essential parts of the rotorcraft as defined by the rule are to be isolated from a powerplant fire by a firewall (§ 27.1191) or must be protected so they can perform their essential functions for at least 5 minutes under any foreseeable powerplant fire condition.

(3) Insufficient protection to provide enough time for a controlled landing would represent an unsafe feature or characteristic for the rotorcraft design.

(4) Section 27.1193(d) requires each cowling and engine compartment covering to be at least fire resistant. Also, § 27.1193(e) requires that each part of the cowling or engine compartment covering, subject to high temperature due to its nearness (proximity) to exhaust system parts or exhaust gas impingement, must be fireproof.

(5) In addition, § 27.1194 requires that all surfaces aft of and near powerplant compartments, other than tail surfaces not subject to heat, flames, or sparks emanating from a powerplant compartment, be at least fire resistant.

b. Procedures.

(1) If each part described in the rule is isolated completely by firewalls, compliance is obtainable.

(2) If each part described by the rule is made of fireproof material, such as steel, compliance is obtained.

(3) If any part described by the rule does not comply with AC 27.861b(1) or (2), it shall be proven that it will perform its function under the prescribed conditions. Compliance may be demonstrated by the following criteria:

(i) The parts shall have a positive margin of safety for the appropriate flight and landing condition, including appropriate engine power conditions, under any foreseeable powerplant fire condition. The time interval under consideration here is the time necessary to complete an emergency descent (as described in the flight manual) and landing from the maximum operating altitude for which certification is requested. In no case is the total time interval to be less than 5 minutes.

(ii) The factors affecting the time interval should include the maximum height above the terrain, the maximum operating altitude, the flight manual recommendations for rate of descent, and a reasonable time for recognizing a powerplant fire.

(iii) The factors affecting the change in physical characteristics (strength primarily, but stiffness may also be a factor) of the parts are the temperature of the part, time interval at the elevated temperature, size, and heat absorption or rejection.

(iv) The factors affecting the temperature of the part are location and distance from the fire and flames and temperature of the flames (2,000° F ±50° F should be used unless proven to be inapplicable).

(v) The rule requires substantiations for any foreseeable powerplant fire condition. Each rotorcraft design is unique and an evaluation of each design is necessary to establish the fire and flight conditions under consideration.

(vi) A very brief and simple example of compliance noted here may be helpful. This example pertains to a single-engine rotorcraft with the engine mounted on top at the fuselage centerline. The engine is supported by all steel tubular mounts. The fuselage panel serves as a work deck as well as a firewall. A 15-minute duration is appropriate for this design. A representative panel of the firewall (deck) skin may be subjected to the autorotational flight loads and the landing load. A flame from an appropriate-sized burner, measuring 2,000° F ±50° F at the skin surface, should impinge on the loaded panel for 15 minutes. The panel may deform but must remain intact and sustain the appropriate load. The flame should not penetrate the panel skin.

(vii) Other rotorcraft designs may have engines located on top of the fuselage under the main rotor. If cowls or firewalls do not isolate the rotors and essential controls, it must be determined by a rational analysis or by temperature measurement that the rotor and essential controls will perform their functions. Air flow through the rotor and factors noted in paragraphs AC 27.861b(3)(ii), (3)(iii), and (3)(iv) are important to an analysis.

AC 27.861A § 27.861 (Amendment 27-26) FIRE PROTECTION OF STRUCTURE, CONTROLS, AND OTHER PARTS.

a. Explanation.

(1) Amendment 27-26 revised the regulation to allow use of parts made from standard fireproof materials of known acceptable dimensions in areas affected by powerplant fires without further proof or qualification. Previously, the standard imposed a performance criteria regardless of the materials and part dimensions used.

(2) “Fireproof” and “fire resistant” are defined in FAR Part 1, § 1.1.

b. Procedures.

(1) A part of acceptable geometry made of steel, or another fireproof material, may be used to comply with the standard.

(2) A material system, panel, or assembly would be equivalent to steel provided it successfully completes the flammability tests described in paragraph AC 27.861b(3)(vi), for Category B rotorcraft adjusted for the time period appropriate to the rotorcraft application.

(3) It is appropriate to further define “fire resistant.” A material system, panel, or assembly would be equivalent to aluminum (fire resistant) if it successfully completes the following flammability test. Locate a specimen (approximately 8 inches square) of the material system panel, assembly, or part at approximately a 45° angle to a horizontal line. Apply the limit or normal operating load. Impinge a 2000 ±150° F (1093 ± 83°C) flame on the article for at least 5 minutes duration. Flame penetration of the test article is not allowed. In addition, the part or component should be able to perform its intended function, as installed, during and after the test.

AC 27.863 § 27.863 (Amendment 27-16) FLAMMABLE FLUID FIRE PROTECTION.

a. Background.

(1) The development of § 27.863 can be traced through CARs 6.485 and 6.486, and subsequent Amendment 27-16.

(2) Investigation of several accidents disclosed evidence of in-flight fires caused by leakage of flammable fluids to ignition sources. The revisions to § 27.863 adopted by Amendment 27-16 require significantly more attention to overall fire protection and prevention.

b. Explanation.

(1) Prior to Amendment 27-16, this rule only required either a means to prevent ignition of flammable fluids or vapors or a means to control any resulting fire. Isolation of flammable fluids and vapors from ignition sources by shrouding or sealing was the normal method of compliance. With Amendment 27-16, the rule further requires the assumption that these means fail or are ineffective and a fire does occur. Means to minimize the consequence of these fires must be provided. Specifically identified considerations must include the flammability of any combustible or absorbing materials, electrical faults, malfunction of protective devices, and so forth.

(2) The rule does not require the entire rotorcraft to be a “designated fire zone.”

c. Methods of Compliance.

(1) To minimize the probability of ignition of fluids and vapors after single failure of a component or systems, the following methods may be used:

(i) Shroud and drain flammable fluid systems (including steel fluid lines, fittings, etc.) and provide the systems with fuel and vapor seals with respect to potential ignition sources (electrical wiring and equipment, hot bleed air lines, etc.).

(ii) Provide other effective separation, ventilation, or overheat shutdown devices, etc., to preclude ignition.

(iii) Ensure that electrical equipment in the areas subject to flammable fluids and vapors is either hermetically sealed or has been tested and shown to be free of ignition capability. Paragraph AC 27.1309 describes acceptable guidance for such laboratory testing.

(iv) Place a restricting orifice in fluid pressure lines routed to instruments and transducers.

(v) Ensure fluid lines are not located so as to be subject to abrasion during normal operations. Cargo compartments should be evaluated for potential line damage due to cargo movement.

(2) To minimize hazards if ignition occurs:

(i) Provide fireproof designs, firewall isolation, or equivalent means for critical structure, equipment, and personnel areas.

(ii) Consider fire detection, extinguishment, shutoff valves, fire suppression systems, etc.

(3) In considering compliance, the actual protective measures may be related to the situation, considering the quantity and flammability characteristic of the fluid, the fire damage tolerance of the area, and the means available to the crew to minimize hazards from the fire. If action by the crew is necessary, a quick acting means (not necessarily fire detectors) must be provided to alert the crew in the event of a fire. Details of any action required by the crew should be included in the Rotorcraft Flight Manual.

(4) Compliance with § 27.863(d) requires, a minimum, type design data defining each area where flammable fluids or vapors might escape.

SUBPART D - DESIGN AND CONSTRUCTION

EXTERNAL LOAD ATTACHING MEANS.

AC 27.865. § 27.865 (Amendment 27-11) EXTERNAL LOAD ATTACHING MEANS.

a. Explanation.

(1) If certification for external load operations is requested, the rule requires that the external load attaching means be substantiated by test or analysis for a limit static load equal to or greater than 2.5 times the maximum external load for which certification is requested. The factor of 2.5 times the maximum external load was established as a minimum strength requirement by Part 133 operations to account for loading effects of sling-load angles up to 30° from the vertical. Allowance for reducing the 30° angle is provided if substantiated.

(2) The rule requires that a quick-release device be installed on one of the pilot's primary controls so the pilot can quickly release the external load during an emergency situation. In addition, a backup manual mechanical control for the quick-release device is required to be readily accessible to either the pilot or another crewmember.

(3) The rule requires appropriate placards or markings stating the maximum authorized external load.

b. Procedures.

(1) The maximum external load for which authorization is requested should not exceed the rated capacity of the quick-release device. The quick-release device should be strength tested (with FAA/AUTHORITY witness) if it is not produced to a recognized industry or military standard.

(2) Substantiation of external loading requirements must include any direction making an angle of 30° (with the exception of directions having a forward component). (reference § 27.865(a).)

(i) The sling-load angle (i.e., the angle between the vertical direction and the sling-load cable supporting the external load) should not exceed an angle of 30° to minimize the cable tension load.

(ii) The 30° angle may be reduced if an operating limitation is established limiting external load operations to such angles for which compliance has been shown or if the reduced angle cannot be exceeded in service. The lesser angle should be substantiated by flight testing.

(3) The external load releasing system is specified to include a quick release device installed on one of the pilot's primary controls. It is usually installed on the cyclic stick to allow the pilot to release the load with minimum distraction after maneuvering the load into the release position.

(4) A manual mechanical control for the quick-release device is specified to be installed and be readily accessible to the pilot or to another crewmember. A sufficient amount of slack should be provided in the control cable to permit complete cargo movement without tripping the cargo release.

AC 27.865A. § 27.865 (Amendment 27-26) EXTERNAL LOAD ATTACHING MEANS.

a. Explanation. Amendment 27-26 added two requirements to § 27.865:

(1) Section 27.865(a) is clarified to allow use of a design factor less than 2.5g's, for rotorcraft load combinations A, B, and C non-human external cargo applications provided the lower load factor is not likely to be exceeded by virtue of the rotorcraft characteristics and capability. That is, the rotorcraft design factors may be used for the cargo device system.

(2) Section 27.865(d) was added to clarify and specify the fatigue requirements for the external cargo attaching means.

b. Procedures. All of the policy material pertaining to this section remains in effect with the following additions:

(1) For § 27.865(a), if a design limit load factor less than 2.5g's is requested, the applicant should provide a rational analysis and/or a flight operations data base that clearly shows that the load factor requested is unlikely to be exceeded in service.

NOTE: § 27.337(b) requires use of 2.0 g's as a minimum.

(2) § 27.865(d), all failures of the cargo attaching means (and the associated critical components) that are likely to be hazardous to the rotorcraft should be identified by an acceptable means, such as a Failure Mode Effect Analysis (FMEA). The critical components associated with these failure modes should receive a fatigue analysis and/or test to ensure that the likelihood of a failure occurring is minimized. In the majority of cases, an analysis using the methods of AC 27 MG 11, "Fatigue Evaluation of Rotorcraft Structure", will be sufficient. If any component has a service life and/or mandatory inspection these components and each mandatory life should be identified, approved, and placed in the airworthiness limitations section of the maintenance manual or Instructions for Continued Airworthiness. See paragraph AC 27.1529 for information on these manuals.

AC 27.865B. § 27.865 (Amendment 27-36) EXTERNAL LOAD ATTACHING MEANS.

a. Background. The standards for external load attaching means, transport and normal category rotorcraft were originally contained in Subpart D, "Airworthiness Requirements of 14 CFR Part 133, Rotorcraft External-Load Operations." Amendment 29-12, issued in 1977, added a new § 29.865, which moved these standards from Part 133 to Part 29. An identical transfer occurred in 1977 for Part 27. Amendment 29-26, issued in 1990, clarified the intent of Amendment 29-12 but did not change it substantively. Transport Categories A and B and Normal Category rotorcraft were initially used under Part 133 operations, and after Amendment 133-6, restricted category rotorcraft were also included under Part 133 operations. The carriage of persons external to the rotorcraft for hire first came about when a Part 29 operator, exempt from Part 133, transferred harbor pilots to and from ships by a hoist and sling. The exemption was granted to study the feasibility of passenger transfer outside of the cabin. Grant of the exemption was based, in part, on similar, prior operations that had been conducted in Europe and Africa, for hire, with helicopters approved by the appropriate authorities and, in part, on similar military and public helicopter operations, not for hire, in the U.S. Subsequently, Amendment 133-9,adopted in January 1987, established a new Class D rotorcraft load combination (RLC) for transporting loads other than Class A, B, or C that are specifically approved by the Administrator external to the rotorcraft. Amendment 133-9 also provided for the limitations and conditions for transport of external loads other than Class A, B, or C and the necessary, associated safety requirements. Part 27 rotorcraft are not eligible for RLC Class D, because of the current restriction of § 133.45(e) that limits use of RLC Class D to Part 29 Category A rotorcraft (under the performance limits prescribed in § 133.45(e)). Part 29 has recently been changed to reflect RLC Class D requirements. Also, the scope and thus the title of the standard have changed from "External load attaching means" to "External loads" to reflect the more comprehensive approach for external loads required to assure the proper level-of safety.

b. Explanation.

(1) This advisory material contains guidance for certification of helicopter external load attaching means and load carrying systems to be used in conjunction with operating rules such as Part 133, "Rotorcraft External Load Operations." Subpart D of Part 133 contains supplemental airworthiness requirements. 14 CFR Part 1 defines four RLC classes that (with the exception of RLC Class D due to the restriction of 133.45(e)) are approvable under Part 133 operating rules and that are eligible for certification under § 27.865. The three RLC classes (and their eligibility for Part 27 use based on operational requirements) are summarized in FIGURE AC 27.865-1 and discussed in paragraph d. Under operating rules RLC Classes A, B, and C are eligible, under specific restrictions, for both human external cargo (HEC) and nonhuman external cargo (NHEC) operations. However, under the operating rules, only RLC Class D is eligible for transporting HEC for compensation (see Figure AC 27.865-1). For further information, AC 133-1A, "Rotorcraft External-Load Operations in Accordance

with 14 CFR Part 133," October 16, 1979, may be reviewed. Also, paragraph AC 27.25 (reference § 27.25) concerns, in part, jettisonable external cargo.

(2) Section 27.865 provides a minimum level of safety for normal category rotorcraft designs to be used with operating rules such as Part 133. Certain aspects of operations such as microwave tower and high-line wirework may also be regulated separately by other Federal agencies such as DOE, EPA, and OSHA or by other international entities. For applications that could come under multiple agency regulation (or regulation by other entities), special certification emphasis will be required by both the applicant and the approving authority to assure all relevant safety requirements are identified and met. Potential additional requirements, where thought to exist, are noted herein.

c. Definitions.

(1) Applicable cargo type. The cargo type (i.e., non-human external cargo (NHEC), human external cargo (HEC), or both) that each RLC Class is eligible to use by regulation (Figure AC –27.865-1 contains explicit definitions for U.S. Part 133 Operations).

(2) Backup Quick-Release Subsystem (BQRS). The secondary or "second choice" subsystem used to perform a normal or emergency jettison of external cargo.

(3) Cargo. The part of any Rotorcraft-Load Combination that is removable, changeable, and is attached to the rotorcraft by an approved means.

(4) Cargo hook. A hook that can be rated for both HEC and NHEC. It is typically used by being fixed directly to a designated hardpoint on the rotorcraft.

(5) Dual actuation device (DAD). This is a sequential control that requires two distinct actions in series for actuation. One example is removal of a lock pin followed by a "then free" switch or lever activation for load release to occur (in this scenario, a load release switch protected only by an uncovered switch guard is not acceptable). For jettisonable HEC applications, **a simple covered switch does not qualify as a DAD.** Familiarity with covered switches allows the pilot to both open and activate the switch in one motion. This has led to inadvertent load release.

(6) Emergency jettison (or complete load release). The intentional, instantaneous release of NHEC or HEC in a preset sequence by the quick release system (QRS) that is normally performed to achieve safer aircraft operation in an emergency.

(7) External fixture. A structure external to and in addition to the basic airframe that does not have true jettison capability and has no significant payload capability in addition to its own weight. An example is an agricultural spray- boom. These configurations are not "External Loads" approvable under § 27.865.

(8) Hoist. A hoist is a device that exerts a vertical pull, usually through a cable and drum system (i.e., a pull that does not typically exceed a 30-degree cone measured around the z-rotorcraft axis).

(9) Hoist demonstration cycle (or "one cycle"). The complete extension and retraction of at least 95 percent of the actual cable length, or 100 percent of the cable length capable of being used in service (i.e., that would activate any extension or retraction limiting devices), whichever is greater.

(10) Hoist load-speed combinations. Some hoists are designed so that the extension and retraction speed slows as the load increases or nears the end of a cable extension. Other hoist designs maintain a constant speed as the load is varied. In the latter design, the load-speed combination simply means the variation in load at the constant design speed of the hoist.

(11) Human external cargo (HEC). A person(s) that at some point in the operation is carried external to the rotorcraft. (Figure AC 27.865-1 contains explicit definitions for U.S. Part 133 Operations). See Nonhuman external Cargo (NHEC).

(12) Nonhuman external cargo (NHEC). Any external cargo operation that does not at any time involve a person(s) carried external to the rotorcraft (figure AC 27.865-1 contains explicit definitions for U.S. Part 133 Operations).

(13) Normal jettison (or selective load release). The intentional release, normally at optimum jettison conditions, of an NHEC.

(14) Personnel carrying device system (PCDS). The entire attached or suspended system used to carry HEC. This is any HEC carrying configuration such as a suspended (e.g., hoist, cable, harness) HEC system or an attached (e.g., a rigid basket or cage attached to skids) HEC system. (See TSO C167)

(15) Primary Quick-Release Subsystem (PQRS). The primary or "first choice" subsystem used to perform a normal or emergency jettison of external cargo.

(16) Quick-release system (QRS). The entire release system for jettisonable external cargo, (i.e., the sum total of both the primary and backup quick-release subsystems). The QRS consists of all components including the controls, the release devices, and everything in between.

(17) Rescue hook (or hook). A hook that can be rated for both HEC and NHEC. It is typically used in conjunction with a hoist or equivalent system.

(18) Rotorcraft-load combination (RLC). The combination of a rotorcraft and an external-load, including the external-load attaching means. Rotorcraft-load combinations are designated as Class A, Class B, Class C, and Class D, as follows:

(i) Class A rotorcraft-load combination means one in which the external load cannot move freely, cannot be jettisoned, and does not extend below the landing gear.

(ii) Class B rotorcraft-load combination means one in which the external load is jettisonable and is lifted free of land or water during the rotorcraft operation.

(iii) Class C rotorcraft-load combination means one in which the external load is jettisonable and remains in contact with land or water during the rotorcraft operation.

(iv) Class D rotorcraft-load combination means one in which the external-load is other than a Class A, B, or C and has been specifically approved by the Administrator for that operation. RLC Class D operations are not allowed for Part 27 rotorcraft (Re: 133.45(e) restriction).

(19) Spider: A spider is a system of attaching a lowering cable or rope or a harness to a NHEC (or HEC) RLC to eliminate unwanted flight dynamics during operations. A spider usually has four or more legs (or load paths) that connect to various points of a PCDS to equalize loading and prevent spinning, twisting, or other undesirable flight dynamics.

(20) True jettison capability. The ability to safely release an external load using an approved QRS in 30 seconds or less.

NOTE: In all cases, a PQRS should release the external load in less than 5 seconds. Many PQRS's will release the external load in milliseconds, once the activation device is triggered. However a manual BQRS, such as a set of cable cutters, could take as much as 30 seconds to release the external load. The 30 seconds would be measured starting from the time the release command is given and ending when the external load is cut loose.

(21) True payload capability. The ability of an external device or tank to carry a significant payload in addition to its own weight. If little or no payload can be carried, the external device or tank is an external fixture (see definition).

(22) Type inspection authorization (TIA). This is FAA Form 8110-1. It is used for authorizing official ground inspections and flight-tests necessary to fulfill the requirements for type certification or supplemental type certification. Order 8110.4, Chapter 2, Section 1, Paragraph 16, states the criteria for TIA issuance.

(23) Winch. A winch is a device that can employ a cable and drum or other means to exert a horizontal (i.e., x-rotorcraft axis) pull. However, since a winch can be used to perform a hoist function by use of a 90-degree cable direction change device (such as a pulley or pulley system), a winch system may be considered a hoist.

d. Procedures. The following certification procedures are provided in the most general form. Where there are significant differences between the cargo types, these differences are highlighted.

(1) General Compliance Procedures for § 27.865: The applicant should clearly identify both the Rotorcraft Load Combinations (RLC) and the applicable cargo types (NHEC or HEC) for which application is being made. The structural loads and operating envelopes for each RLC class and applicable cargo type should be determined and used to formulate the flight manual supplement and basic loads report. The applicant should show by analysis, test, or both, that the rotorcraft structure, the external load attachment means, and the PCDS, if applicable, meet the specific requirements of §§ 27.865, 133.41, 133.43, 133.45, and the other relevant requirements of Part 27 for the proposed operating envelope.

NOTE: It is possible, ifapproved, to carry both HEC and NHEC externally, simultaneously as two separate external loads. However, in no case is it intended that the approved Maximum Internal Gross Weight be exceeded for any approved HEC configuration (or combined NHEC and HEC configuration) in normal operations.

Reliability of the external load system. The failure of the external load system, including the PCDS where applicable, and its attachments to the rotorcraft should be shown to be extremely improbable (i.e., 1×10^{-9} failures per flight) for all failure modes that could cause a catastrophic failure, serious injury, or a fatality anywhere in the total airborne system. All significant failure modes of lesser consequence should be shown to be improbable (i.e., 1×10^{-5} failures per flight). An acceptable method of achieving this goal is to submit and achieve approval of all of the following:

(i) A failure modes and effects analysis (FMEA) showing that all potential failure modes of the airborne system which may result in catastrophic failures, serious injuries, or fatalities are extremely improbable and any less significant failures are improbable.

(ii) A repetitive test of all functional devices that cycles these devices at least 30 times under critical structural conditions, operational conditions, or a combination of both.

(iii) An environmental qualification review over the proposed operating environment.

Figure AC 27.865B-1
U.S. OPERATIONAL (PART 133) ROTORCRAFT-LOAD COMBINATION VERSUS APPLICABLE CARGO TYPE DATA AND DEFINITION SUMMARY

Possible RLCs and Cargo Types	Category "A" Rating and OEI Hover Capability	Notes	Direct 2-Way Voice Communications Required See Paragraph d(10)
RLC A, HEC	No	Note 2	No
RLC A, NHEC	No		N/a
RLC B, HEC	No	Note 2	No
RLC B, NHEC	No		N/A
RLC C, HEC	No	Note 2	No
RLC C, NHEC	N/A		N/A
RLC D, HEC	Note 1	Note 1	Note 1

NOTES:

1.RLC Class D operations are not allowed for Part 27 rotorcraft (Re: 133.45(e) restriction).

2.A person who is not being carried or transported for compensation, is knowledgeable of the risks involved, and at some point is required to be outside of the rotorcraft in order to fulfill the mission. These persons are considered as RLC Class A, B, or C HEC as appropriate to the operation.

(2) § 27.865(a) Static Structural Substantiation Procedures: The following static structural substantiation methods should be used.

(i) Critical basic load determination. The critical basic loads and corresponding flight envelope are determined by statically substantiating the gross weight range limits, the corresponding vertical limit load factors (N_{ZW}) and safety factors applicable for the type of external load for which the application is being made.

Note: In cases where NHEC or HEC can have more than one shape, center-of-gravity, center-of-lift, or be carried at more than one distance in flight from the rotorcraft attachment, a critical configuration for certification purposes may not be determinable. If such a critical configuration can be determined, it may be examined for approval as a "worst case" to satisfy a particular certification criterion or several criteria, as appropriate. If such a critical configuration cannot be determined, the extreme points of the operational – external load configuration envelope should be examined with consideration given to any other points within the envelope which experience or other rationale would indicate should be investigated.

(ii) Vertical Limit and Ultimate Load Factors. The basic N_{ZW} is converted to ultimate load by multiplying the maximum vertical limit load by the appropriate safety factor. (For restricted category approvals, see guidance in paragraph AC 27 MG 5.) This ultimate load is used to substantiate all existing structure affected by, and all added structure associated with, the load carrying device, its attachments and its cargo. Casting factors, fitting factors, and other dynamic load factors should be applied where appropriate.

(A) **NHEC applications**. In most cases, it is acceptable to perform a standard static analysis to show compliance. A vertical limit load factor (N_{ZW}) of 2.5 g is typical for heavy gross weight NHEC hauling configurations (reference § 27.337). This vertical load factor should be applied to the maximum external load for which application is being made, together with a minimum safety factor of 1.5.

(B) **HEC applications**. If a safety factor 3.0 or more is used, it is acceptable to perform a standard static analysis to show compliance. The safety factor should be applied to the yield strength of the weakest component in the system (QRS, PCDS, and attachment load path). If a safety factor of less than 3.0 is used, both an analysis and a full-scale ultimate load test of relevant parts of the system should be submitted.

Since HEC applications typically involve lower gross weight configurations, a higher vertical limit load factor is required to assure that limit load is not exceeded in service. The applicant should use either the conservative value of 3.5 g's or an analytically derived maximum vertical limit load factor for the requested operating envelope. Linear interpolation between the vertical load factors of maximum and minimum design weights

may be used. However, in no case may the vertical limit load factor be less than 2.5 g's for any RLC application for HEC.

For the purpose of structural analysis or test, assume a 223-pound man as the minimum weight of each occupant carried as HEC.

Note: If the HEC is engaged in work tasks that employ devices of significant added weight (heavy backpacks, tools, fire extinguishers, etc.), the total weight of the 223-pound man and equipment should be assumed in the structural analysis or test.

(iii) Critical Structural Case. For applications involving more than one RLC class or cargo type, the structural substantiation is required only for the most critical case. The most critical case should be determined by rational analysis.

(iv) Jettisonable Loads. For the substantiating analyses or tests of all jettisonable RLC external loads, including HEC, the maximum external load should be applied at the maximum angle that can be achieved in service but not less than 30 degrees. The angle should be measured from the sling-load-line to rotorcraft vertical axis (z axis) and may be in any direction that can be achieved in service. The 30-degree angle may be reduced in some or all directions if it is impossible to obtain due to physical constraints or operating limitations. The maximum allowable cable angle should be determined and approved. The angle approval should be based on structural requirements, mechanical interference limits, and flight handling characteristics over the most critical conditions and combinations of conditions in the approved flight envelope.

(v) Hoist system limit load.

Note: In cases where hoist cables or long-line cables are utilized, a new dynamic system is established. Characteristics of the system should be evaluated to assure that either no hazardous failure modes exist or that they are acceptably minimized. For example, the cable or long line may exhibit a natural frequency that could be excited by sources internal to the overall structural system (i.e., the rotorcraft) or by sources external to the system. Another example is the loading effect of the cable acting as a spring between the rotorcraft and the suspended external load.

(A) Determine the basic loads that result in the failure or unspooling of the hoist or its installation, respectively.

NOTE: This determination should be based on static strength and any significant dynamic load magnification factors.

(B) Select the lower of the two values as the ultimate load of the hoist system installation.

(C) Divide the selected ultimate load by 1.5 to determine the true structural limit load of the system.

(D) Determine the manufacturer's approved (or applicants applied for) "limit design safety factor." Divide this factor into the true structural limit load (from (C) above) to determine the hoist system's working (or placarded) limit load.

(E) Compare the system's derived limit load to the applied for one "g" payload multiplied by the maximum downward vertical load factor (N_{ZWMAX}) to determine the critical payload's limit value.

(F) The critical limit payload should be equal to or less than the system's derived limit load for the installation to be approvable.

(3) <u>§ 27.865(b) and § 27.865(c) Procedures for Quick Release Systems and Cargo Hooks</u>: For jettisonable RLC's of any applicable cargo type, both a primary quick-release system (PQRS) and a back-up quick-release system (BQRS) are required. Features that should be considered are:

(i) The PQRS, BQRS and their load release devices and subsystems (such as electronically actuated guillotines) should be separate (i.e., physically, systematically, and functionally redundant).

(ii) The controls for the PQRS should be installed on one of the pilot's primary controls, or in an equivalently accessible location. The use of an "equivalent accessible location" should be reviewed on a case-by-case basis and used only where equivalent safety is clearly maintained.

(iii) The controls for the BQRS may be less sophisticated than that of the PQRS. For instance, manual cable cutters are acceptable provided they are listed in the flight manual as a required device and have a dedicated, placarded storage location.

(iv) The PQRS should release the external load in less than 5 seconds. The BQRS should release the external load in less than 30 seconds. This time interval begins the moment an emergency is declared and the ends when the load is released.

(v) Each quick-release device should be designed and located to allow the pilot or a crewmember to accomplish external cargo release without hazardously limiting the ability to control the rotorcraft during emergency situations. The flight manual should reflect the requirement for a crewmember and the related functions.

(vi) <u>Other load release types</u>. In some current configurations, such as those used for high line operations, a load release may be present that is not on the rotorcraft but is on the PCDS itself. Examples are a tension release device that lets out

line under an operationally induced load or a personal rope cutter. These devices are acceptable if:

(A) The off-rotorcraft release is considered a "third release." This type of release is not a substitute for a required release (i.e., PQRS or BQRS);

(B) The release meets other relevant requirements of § 27.865 and the methods of this AC or equivalent methods; and

(C) The release has no operational or failure modes that would affect continued safe flight and landing under any operations, critical failure modes, conditions, or combination of either.

(vii) Cargo hooks or equivalent devices and their related systems. All cargo hooks or equivalent devices should be approved to acceptable aircraft industry standards. The applicant should present these standards, and any related manufacturer's certificates of production or qualification as part of the approval package.

(A) General. Cargo hook systems should have the same reliability goals and should be functionally demonstrated under critical loads for NHEC and HEC, as appropriate. All engagement and release modes should be demonstrated. If the hook is used as a quick-release device, then release of critical loads should be demonstrated under conditions that simulate maximum allowable bank angles and speeds and any other critical operating conditions. Demonstration of any re-latching features and any safety or warning devices should also be conducted. Demonstration of actual in-flight emergency quick-release capability may not be necessary if the quick-release capability can be acceptably simulated by other means.

NOTE: Cargo hook manufacturers specify particular shapes, sizes, and cross sections for lifting eyes to assure compatibility with their hook design (e.g., Breeze Eastern Service Bulletin CAB-100-41). Experience has shown that, under certain conditions, a load may inadvertently hang up because of improper geometry at the hook-to-eye interface that will not allow the eye to slide off an open hook as intended.

NOTE: For both NHEC and HEC designs, the phenomena of hook dynamic roll-out (inadvertent opening of the hook latch and subsequent release of the load) should be considered to assure that QRS reliability goals are not compromised. This is of particular concern for HEC applications. Hook dynamic roll-out occurs during certain ground handling and flight conditions that may allow the lifting eye to work its way out of the hook.

Hook dynamic roll-out typically occurs when either the RLC's sling or harness is not properly attached to the hook, is blown by down draft, is dragged along the ground or through water; or is otherwise placed into the dangerous hook-to-eye configuration.

The potential for hook dynamic roll-out can be minimized in design by specifying particular hook-and-eye shape and cross-section combinations. For non-jettisonable RLC's, a pin can be used to lock the hook keeper in place during operations.

NOTE: Some cargo hook systems may employ two or more cargo hooks for safety. These systems are approvable. However, loss of any load by a single hook should be shown to not result in loss of control of the rotorcraft. In a dual hook system, if the hook itself is the quick-release device (i.e., if a single release point does not exist in the load path between the rotorcraft and the dual hooks), the pilot should have a dual PQRS that includes selectable, co-located individual quick releases that are independent for each hook used. A BQRS should also be present for each hook. For cargo hook systems with more than two hooks, either a single release point should be present in the load path between the rotorcraft and the multiple hook system, or multiple PQRS and BQRS's should be present.

(B) Jettisonable cargo hook systems. For jettisonable applications, each cargo hook-

(1) Should have a sufficient amount of slack in the control cable to permit cargo hook movement without tripping the hook release.

(2) Should be shown to be reliable (see Paragraph d.1).

(3) For HEC systems, unless the cargo hook is to be the primary quick-release device, each cargo hook should be designed so that operationally induced loads cannot inadvertently release the load. For example, a simple cargo hook should have a one-way, spring-loaded gate (i.e., "snap hook") that allows load attachment going into the gate but does not allow the gate to open (and subsequently lose the HEC) when an operationally induced load is applied in the opposite direction. For HEC applications, cargo hooks that also serve as a quick-release device should be carefully reviewed to assure they are reliable.

(4) § 27.865(b)(3) Reliability Determination for QRS's and Devices: Quick release systems are required to be reliable. The primary electrical and mechanical failure modes that should be identified and minimized are: (1) load release by any means, and (2) loss of continued safe flight and landing capability due to a QRS failure. However, any failure that could result in catastrophic failure modes, serious injuries, or fatalities should also be identified and shown to be extremely improbable. All other failure modes should be shown to be improbable. The reliability of the system should be demonstrated by completion and approval of all of the following:

(i) A FMEA showing that all potential failure mode of the QRS which may result in catastrophic failures, serious injuries, or fatalities are extremely improbable and any less significant failures are improbable.

(ii) A repetitive test of all functioning devices that affect or comprise the QRS and that tests all critical conditions or combinations of critical conditions at least 10 times each for NHEC and 30 times for HEC, using both the primary and backup QRS subsystems.

(iii) An environmental qualification program that includes consideration of high and low temperatures (typically -40F to +150F), altitudes to 12,000 feet, humidity, salt spray, sand and dust, vibration, shock, rain, fungus, and acceleration. Testing should be conducted in accordance with RTCA/DO-160 or MIL-STD-810 for high and low temperature tests and for vibrations.

(iv) Using the methods of compliance in other relevant paragraphs of the AC or equivalent methods.

(5) Functional Reliability and Durability Compliance Procedures for Hoist Systems under §§ 27.865(b)(3)(i) and (c)(2): Hoist systems and their installations in the rotorcraft should be designed, approved, and demonstrated as follows:

(i) For established, previously approved hoist unit designs that will be placed in a new rotorcraft installation, certification credit (to Amendment 27-36) for the unit itself can be given based on a successful unit design review (or a manufacturer's statement-of-certification accompanied by an FAA Form 8110-3 with appropriate DER approvals) that shows proper previous approval and that no new design changes have been made that would adversely affect the reliability or function of the unit (i.e., an update of the FMEA). If so approved, then only the hoist installation need be approved during the certification process.

(ii) For new hoist unit designs, the unit should be either approved to a standard aircraft industry specification that has been previously and successfully used to approve hoist units, or an equivalent specification should be developed and used during the certification process.

(iii) It is assumed that only one hoist cycle will typically occur per flight. This rationale has been used to determine the 10 demonstration cycles for NHEC applications and 30 demonstration cycles for HEC applications. However, if a particular application requires more than one hoist cycle per flight, then the number of demonstration cycles should be increased accordingly.

(iv) The hoist or rescue hook system should be reliable for the phases of flight in which it is operable, unstowed, partially unstowed, or in which cargo is carried. The hoist should be disabled (or an overriding, fail-safe mechanical safety device such as either a flagged removable shear pin or a load-lowering brake should be utilized) to prevent inadvertent load unspooling or release during any extended flight phases and in which hoist operation is not intended. Loss of hoist operational control should also be considered. The reliability of the system should be demonstrated by completion and approval of all of the following:

(A) A FMEA showing that all potential failure mode of the hoist or rescue hook system which may result in catastrophic failures, serious injuries, or fatalities are extremely improbable and any less significant failures are improbable.

(B) Unless a more rational test method is presented and approved, at least 10 repetitive tests of all functional devices that exercises the entire system's functional parameters should be conducted. These repetitive tests may be conducted on the rotorcraft, or by using a bench simulation that accurately replicates the rotorcraft installation.

(C) A hoist unit environmental qualification program that includes consideration of high and low temperatures (typically -40F to +150F), altitudes to 12,000 feet, humidity, salt spray, sand and dust, vibration, shock, rain, fungus, and acceleration. Testing in accordance with RTCA/DO-160 or MIL-STD-810 for high and low temperature tests and for vibrations. The hoist manufacturers should submit a test plan and follow-on test reports to the applicant and FAA following completion of qualification. It is intended that the hoist itself either be prequalified to the EMI and lightning threat levels specified for NHEC or HEC, as applicable for the requested operation, or that it be qualified as part of the entire onboard QRS to these threat levels.

(D) All instructions and documents necessary for continued airworthiness, normal operations, and emergency (see Paragraph d.17).

(v) Cable attachment. Either the cable should be positively attached to the hoist drum and the attachment should have ultimate load capability, or equivalent means should be provided to minimize the possibility of inadvertent, complete, cable unspooling.

(vi) Cable length and marking. A length of cable nearest the cable's attachment to the hoist drum should be visually marked to indicate to the operator that the cable is near full extension. The length of cable to be marked is a function of the maximum extension speed of the system and the operator's reaction time needed to prevent cable run out. It should be determined during certification demonstration tests. In no case should the length be less than 3-1/2 drum circumferences.

(vii) Cable stops. Means should be present to automatically stop cable movement quickly when the system's extension and retraction operational limits are reached.

(viii) Hoist system load-speed combination ground tests. The load versus speed combinations of the hoist should be demonstrated on the ground (either using an accurate engineering mock-up or a rotorcraft) by showing repeatability of the no load-speed combination, the 50 percent load-speed combination, the 75 percent load-speed combination and the 100 percent (i.e., system rated limit) load-speed combination. If

more than one operational speed range exists, the preceding tests should be performed at either all speeds, or at the most critical.

(A) At least 1/10 of the demonstration cycles (see definition) should include the maximum aft angular displacement of the load from the drum, applied for under § 27.865(a).

(B) A minimum of six consecutive, complete operation cycles should be conducted at the system's 100 percent (i.e., system limit rated) load-speed combination.

(C) In addition, the demonstration should cover all normal and emergency modes of intended operation and should include operation of all control devices such as limit switches, braking devices, and overload sensors in the system.

(D) All quick disconnect devices and cable cutters should be demonstrated at 0 percent, 25 percent, 50 percent, 75 percent, and 100 percent of system limit load or at the most critical percent.

NOTE: Some hoist designs have built-in cable tensioning devices that function at the no load-speed combination, as well as at other load-speed combinations. This device should work during the no load-speed and other load-speed cable-cutting demonstrations.

(E) All electrical and mechanical systems and load release devices for any jettisonable NHEC or HEC RLC should be shown to be reliable by both analysis and by testing.

(F) Any devices or methods used to increase the mechanical advantage of the hoist should also be demonstrated.

(G) During a portion of each demonstration cycle, the hoist should be operated from each station from which it can be controlled.

NOTE: A reasonable amount of starting and stopping during demonstration cycles is acceptable.

(ix) Hoist system continued airworthiness. The design life of the hoist system and any limited life components should be clearly identified, and the Airworthiness Limitations Section of the maintenance manual should include these requirements. For STC's, a maintenance manual supplement should be provided that includes these requirements.

NOTE: Design lives of hoist and cable systems are typically between 5,000 to 8,000 cycles. Some hoist systems have usage time meters installed. Others may have cycle counters installed. Cycle counters should be considered for HEC operations and high load or other operations that may cause low-cycle fatigue failures.

(x) Hoist system flight-tests. An in-flight demonstration test of the hoist system should be conducted for helicopters designed to carry NHEC or HEC. The rotorcraft should be flown to the extremes of the applicable maneuver flight envelope and to all conditions that are critical to strength, maneuverability, stability, and control, or any other factor affecting airworthiness. Unless a lesser load is determined to be more critical for either dynamic stability or other reasons, the maximum hoist system rated load or, if less, the maximum load requested for approval (and the associated limit load data placards) should be used for these tests. The minimum hoist system load (or zero load) should also be demonstrated in these tests.

(6) § 27.865(b)(3)(ii) Electromagnetic Interference: Protection of the QRS against potential internal and external sources of electromagnetic interference (EMI) and lightning is required. This is necessary to prevent inadvertent load release from sources such as lightning strikes, stray electromagnetic signals, and static electricity.

(i) Jettisonable NHEC systems - should be able to absorb a minimum of 20 volts per meter (i.e., CAT U) radio-frequency (RF) field strength per RTCA/DO-160.

(ii) Jettisonable HEC systems - should be able to absorb a minimum of 200 volts per meter (i.e., CAT Y) RF field strength per RTCA/DO-160.

NOTE 1: These RF field threat levels may need to be increased for certain special applications such as microwave tower and high voltage high line repairs. Separate criteria for special applications under multi-agency regulation (such as IEEE or OSHA standards) should also be addressed, as applicable, during certification. When necessary, the issue paper process can be used to establish a practicable level of safety for specific high voltage or other special application conditions. For any devices or means added to meet multi-agency regulations, their failure modes should not have an adverse effect on flight safety. Other certification authorities may require higher RF field threat levels than those required by § 27.865 (e.g., the European Joint Aviation Authorities Interim HIRF policy).

NOTE 2: An approved standard rotorcraft test that includes the full HIRF frequency and amplitude external and internal environments on the QRS and PCDS (or the entire rotorcraft including the QRS and PCDS) could be substituted for the jettisonable NHEC and HEC systems tests defined by d(6)(i) and d(6)(ii), respectively, as long as the RF field strengths directly on the QRS and PCDS are shown to equal or exceed those of d(6)(i) and d(6)(ii).

NOTE 3: The EMI levels specified in d(6)(i) and d(6)(ii) are total EMI levels to be applied to the QRS (and affected QRS component) boundary. The total EMI level applied should include the effects of both external EMI sources and internal EMI sources. All aspects of internally generated EMI should be carefully considered including peaks that could occur from time-to-time due to any combination of on-board systems being operated. For example, special attention should be given to EMI from

hoist operations that involve the switching of very high currents. Those currents can generate significant voltages in closely spaced wiring that, if allowed to reach some squib designs, could activate the device. Shielding, bonding and grounding of wiring associated with operation of the hoist and the quick-release mechanism should be clearly and adequately evaluated during design and certification. This evaluation may require testing. One acceptable test method to demonstrate adequacy of QRS shielding, bonding and grounding, would be to actuate the hoist under maximum load together with likely critical combinations of other aircraft electrical loads and demonstrate that the test squibs (that are more EMI sensitive than the squibs specified for use in the QRS) do not inadvertently operate during the test.

(7) § 27.865(c)(1) QRS Requirements for Jettisonable HEC Operations: For jettisonable HEC operations, both the PQRS and BQRS are required to have a Dual Actuation Device (DAD) for external cargo release. Two distinct actions are required to minimize inadvertent jettison of HEC. The DAD is intended for emergency use during the phases of flight that the HEC is carried or retrieved. The DAD can be used for both NHEC and HEC operations. However, because it can be used for HEC, the instructions for continued airworthiness should be carefully reviewed and documented. The DAD can be operated by the pilot from a primary control or, after a command is given by the pilot, by a crewmember from a remote location. If the backup DAD is a cable cutter, it should be properly secured, placarded and readily accessible to the crewmember intended to use it.

(8) § 27.865(c)(2) PCDS: For all HEC applications, an approved PCDS is required. The PCDS may be either previously approved or is required to be approved during certification. In either case, its installation should be approved. The failure of the PCDS, and its attachments to the rotorcraft should be shown to be extremely improbable (i.e., 1×10^{-9} failures per flight) for all failure modes that could cause a catastrophic failure, serious injury, or fatality. All significant failure modes of lesser consequence should be shown to be improbable (i.e., 1×10^{-5} failures per flight). An acceptable method of achieving this goal is to submit and achieve approval of all of the following:

(i) A FMEA showing that all potential failure modes of the PCDS which may result in catastrophic failures, serious injury, or fatality are extremely improbable and any less significant failures are improbable.

(ii) A repetitive test of all functional devices that cycles these devices at least 30 times under critical structural conditions, operational conditions, or a combination.

(iii) An environmental qualification review for the proposed operating environment.

Note: PCDS designs can vary from simple single occupant “donut” lifesaving devices to relatively complex multiple occupant cages or gondolas. The purpose of the PCDS is to

provide a minimum acceptable level of safety for personnel being transported outside the rotorcraft. The personnel being transported may be healthy or injured, conscious or unconscious.

(iv) TSO C167 is an approved minimum performance specification for HEC body harnesses.

(v) Static strength. The PCDS should be substantiated for the allowable ultimate load and loading conditions as determined under paragraphs d(2).

(vi) Fatigue. § 27.865(f) requires the metallic components of the PCDS to be substantiated for fatigue in accordance with § 27.571 (reference d(14)).

(vii) Personnel safety. For each PCDS design, the applicant should submit a design evaluation that assures the necessary level of personnel safety is provided. As a minimum, the following should be evaluated.

(A) The PCDS should be easily and readily ingressed or egressed.

(B) It should be placarded for proper capacity, internal arrangement and location of occupants, and ingress and egress instructions.

(C) For door latch fail-safety, more than one fastener or closure device should be used. The latch device design should provide direct visual inspectability to assure it is fastened and secured.

(D) Any fabric used should be durable and should be at least flame-resistant.

(E) Safety harnesses and belts should meet TSO C22, TSO C114 or TSO C167 requirements.

(F) Occupant retention devices and related design safety features should be used as necessary. In simple designs, rounded corners and edges with adequate strapping (or other means of HEC retention relative to the PCDS) and head supports or pads may be all the safety features that are necessary. However, in more complex PCDS designs, safety features such as seat belts, handholds, shoulder harnesses, placards, or other personnel safety standards may be required.

(viii) EMI and lightning protection. All essential, affected components of the PCDS, such as intercommunication equipment, should be protected against RF field strengths to a minimum of RTCA/DO-160 CAT Y.

(ix) All instructions and documents necessary for continued airworthiness, normal operations, and emergency operations should be completed, reviewed, and approved during the certification process (see Paragraph d.17).

(x) Flotation devices. PCDS's that are intended to have a dual role as floatation devices or life preservers should meet the requirements of TSO-C13f, "Life Preservers." Also, any PCDS design to be used in the water should have a floatation kit. The kit should support the weight of the maximum number of occupants and the PCDS in the water and minimize the possibility of the occupants floating face down.

(xi) Aerodynamic considerations. Litters and other types of PCDS designs may spin, twist or otherwise respond unacceptably in flight. These designs should be structurally restrained with devices such as a spider, a harness, or an equivalent device to minimize undesirable flight dynamics.

(xii) Medical design considerations. The PCDS should be designed to the maximum practicable extent and placarded to maximize the HEC's protection from medical considerations such as blocked air passages induced by improper body configuration and excessive loss of body heat during operations. Injured or water soaked persons may be exposed to high body heat loss from sources such as rotor wash and the airstream. PCDS occupant safety from transit induced medical considerations can be greatly increased by proper design.

(9) § 27.865(c)(3) QRS Design, Installation, and Placarding: For jettisonable HEC applications, the QRS design, installation, and associated placarding should be given special consideration to assure the proper level of occupant safety.

(10) § 27.865(c)(4) Intercom Systems for HEC Operations: For all HEC operations, the rotorcraft is required to be equipped for, or otherwise allow direct intercommunication under any operational conditions among crewmembers and the HEC. For simple systems, voice or hand signals to PCDS occupants are acceptable. In more complex systems, more sophisticated devices such as or two-way radios or intercoms should be employed.

(11) § 27.865(c)(5) Flight Manual Procedures: Appropriate flight manual procedures and limitations for all HEC operations should be presented. All limitations are required to be approved for all RLC class A, B, or C employing HEC. The flight manual should clearly define the method of communication between the flight crew and the HEC. These instructions and manuals should be validated during TIA flight-testing.

(12) § 27.865(d) Flight-test Verification Work: Flight-test verification work (or an equivalent combination of analysis and ground testing, either in conjunction with or in addition to operations rules such as Part 133 for the U.S.) that thoroughly examines the operational envelope should be conducted with the external cargo carriage device for which approval is requested (especially those that involve HEC). The flight-test program should show that all aspects of the operations applied for are safe, uncomplicated, and can be conducted by a qualified flight crew under the most critical service environment and, in the case of HEC, under emergency conditions. Flight tests should be conducted for the simulated representative NHEC and HEC loads

to demonstrate their in-flight handling and separation characteristics. Each placard, marking, and flight manual supplement should be validated during TIA flight-testing.

(i) General. Flight-testing (or an equivalent combination of analysis and testing) should be conducted under the critical combinations of configurations and operating conditions for which basic type certification approval is sought. Additional combinations of external load and operating conditions may be subsequently approved under relevant operational requirements as long as the structural limits and reliability considerations of the basic certification approval are not exceeded (i.e., equivalent safety is maintained). The qualification flight test work of this subparagraph is intended to be accomplished primarily by analysis or bench testing. However, at least one in-flight, limit load drop test should be conducted for the critical load case. If one critical load case cannot be clearly identified, then more than one drop test might be necessary. Also, in-flight tests for the minimum load case (i.e., typically the cable hook itself) with the load trailing both in the minimum and maximum cable length configurations should be conducted. Any safety-of-flight limitations should be documented and placed in the rotorcraft flight manual. In certain low-gross weight, jettisonable HEC configurations, the PCDS may act as a trailing airfoil that could result in entangling the PCDS and the rotorcraft. These configurations should be assessed on a case-by-case basis by analysis or flight-test to assure any safety-of-flight limitations are clearly identified and placed in the rotorcraft flight manual.

(ii) Separation characteristics of jettisonable external loads. For all jettisonable RLC of any applicable cargo type, satisfactory post-jettison separation characteristics of all loads should meet the minimum criteria that follow:

(A) Immediate "clean" operation of the QRS, including "clean" separate functioning of the PQRS and BQRS.

(B) No damage to the helicopter during or following actuation of the QRS and load jettisoning.

(C) A jettison trajectory clear of the helicopter.

(D) No inherent instability of the jettisonable (or just jettisoned) HEC or NHEC while in proximity to the helicopter.

(E) No adverse or uncontrollable helicopter reactions at the time of jettison.

(F) Stability and control characteristics after jettison should be within the originally approved limits.

(G) No unacceptable degradation of the helicopter performance characteristics after jettison.

(iii) Jettison requirements for jettisonable external loads. For representative cargo types (low, medium, and high density loads on long and short lines), emergency and normal jettison procedures should be demonstrated (by a combination of analysis, ground tests, and flight tests) at sufficient combinations of flight conditions to establish a jettison envelope which should be placed in the flight manual.

(iv) QRS demonstration. Repetitive jettison demonstrations should be conducted that use the PQRS. Except, the BQRS should be utilized at least once.

(v) QRS reliability (i.e., failure modes) affecting flight performance. The FMEA of the QRS (reference d(4)) should show that any single system failure will not result in unsatisfactory flight characteristics, including any QRS failures resulting in asymmetric loading conditions.

(vi) Flight-test weight and CG locations. All flight tests should be conducted at the extreme or critical combinations of weight and longitudinal and lateral CG conditions within the applied for flight envelope. The rotorcraft should remain within approved weight and CG limits both with the external load applied and after jettison of the load.

(vii) Jettison Envelopes. Emergency and normal jettison demonstrations should be performed at sufficient airspeeds and decent rates to establish any restrictions for satisfactory separation characteristics. Both the maximum and minimum airspeed limits and maximum decent rate for safe separation should be determined. The sideslip envelope as a function of airspeed should be determined.

(viii) Altitude. Emergency and normal jettison demonstrations should be performed at altitudes consistent with the approvable operational envelope and with the maneuvering requirements necessary to overcome any adverse effects of the jettison.

(ix) Attitude. Emergency and normal jettison demonstrations should be performed from all attitudes appropriate to normal and emergency operational usage. Where the attitudes of HEC or NHEC with respect to the helicopter may be varied, the most critical attitude should be demonstrated. This demonstration would normally be accomplished by bench testing.

(x) Hoist and rescue hook systems and cargo hook systems. An in-flight demonstration test of the hoist system should be conducted for helicopters designed to carry NHEC or HEC. The rotorcraft should be flown to the extremes of the applicable maneuver flight envelope and to all conditions that are critical to strength, maneuverability, stability, and control, or any other factor affecting airworthiness. Unless a lesser load is determined to be more critical for either dynamic stability or other reasons; the maximum hoist system rated load or, if less, the maximum load requested for approval (and the associated limit load data placards) should be used for these tests. The minimum hoist system load (or zero load) should also be demonstrated in these tests.

(13) § 27.865(e) External Loads Placards and Markings: Placards and markings should be installed next to the external load attaching means, in a clearly noticeable location, that state the primary operational limitations - specifically including the maximum authorized external load. Not all operational limitations need be stated on the placard (or equivalent markings) only those clearly necessary for immediate reference in operations. Other more detailed operational limitations of lesser immediate importance should be stated either directly in the RFM or in a RFM supplement.

(14) § 27.865(f) Fatigue Substantiation: The fatigue evaluation of § 27.571 should be applied as follows:

NOTE: The term "hazard to the rotorcraft" is defined to include all hazards to either the rotorcraft, to the occupants thereof, or both.

(i) Fatigue evaluation of NHEC applications. Any critical components of the suspended system and their attachments (such as the cargo hook or bolted or pinned truss attachments), the failure of which could result in a hazard to the rotorcraft, should include an acceptable fatigue analysis in accordance with AC 27 MG 11, paragraph e.

(ii) Fatigue evaluation of HEC applications. The entire PCDS and its attachments should be reviewed on a component-by-component basis to determine which, if any, components are fatigue critical or damage intolerant. These components should be analyzed or tested (per AC 27 MG 11, AC 27 MG 11, or other equivalent methods) to assure their fatigue life limits are properly determined and placed in the limited life section of the maintenance manual.

(15) Other Considerations

(i) Agricultural Installation (AI): AI's can be approved for either jettisonable or non-jettisonable NHEC or HEC operations as long as they meet relevant certification and operations requirements and follow appropriate compliance methods. However, most current AI designs are external fixtures (see definition) - not external loads. External fixtures are not approvable as jettisonable external cargo because they do not have a true payload (see definition), true jettison capability (see definition), or a complete QRS. Many AI designs can dump their solid or liquid chemical loads by use of a "purge port" release over a relatively long time period (i.e., greater than 30 seconds). This is not considered true jettison capability (see definition) since the external load is not released by a QRS and since the release time span is typically greater than 30 seconds (reference c(20) and d(7)). Thus, these types of AI's should be approved as a non-jettisonable external load. However, other designs that have the entire AI (or significant portions thereof) attached to the rotorcraft, that have short time frame jettison (or release) capability provided by a QRS that meets the definitions herein and that have no post-jettison characteristics that would endanger continued safe flight and landing may be approved as a jettisonable external load. For example, if all the relevant

criteria are properly met, a jettisonable fluid load can be approved as a NHEC external cargo. AC 27 MG 5 discusses other AI certification methodology.

(ii) External Tanks: External tank configurations that have true payload (see definition) and true jettison capability (see definition) should be approved as jettisonable NHEC. External tank configurations that have a true payload capability but do not have true jettison capability should be approved as non-jettisonable NHEC. An external tank that has neither a true payload capability nor true jettison capability is an external fixture; it should not be approved as an external load under § 27.865. If an external tank is to be jettisoned in flight, it should have a QRS that is approved for the maximum jettisonable external tank payload and is either inoperable or is otherwise rendered reliable to minimize inadvertent jettisons above the maximum jettisonable external tank payload.

(iii) Logging Operations: These operations are very susceptible to low-cycle fatigue because of the large loads and relatively high load cycles that are common to this industry. It is recommended that load-measuring devices (such as load cells) be used to assure that no unrecorded overloads occur and to assure that cycles producing high fatigue damage are properly considered. Cycle counters are recommended to assure acceptable cumulative fatigue damage levels are identifiable and are not exceeded. As either a supplementary method or alternate method, maintenance instructions should be considered to assure proper cycle counting and load recording during operations.

(16) Noise Certification: 14 CFR 36 is the noise certification standard. Section 36.1(a)(4) specifically exempts helicopters that are designed exclusively for agricultural work, carrying firefighting materials, or external loads activity from the noise standards. Section 21.93(b)(4) also contains specific information regarding external loads and what configurations do not constitute an acoustical change.

(17) Instructions for Continued Airworthiness. Maintenance manuals (and RFM supplements) developed by applicants for external load applications should be presented for approval and should include all appropriate inspection and maintenance procedures. The applicant should provide sufficient data and other information to establish the frequency, extent, and methods of inspection of critical structure, systems and components. This information is required by § 27.1529 to be included in the maintenance manual. For example, maintenance requirements for sensitive QRS squibs should be carefully determined, documented, approved during certification, and included as specific mandatory scheduled maintenance requirements that may require either "daily" or "pre-flight" checks (especially for HEC applications).

SUBPART D - DESIGN AND CONSTRUCTION

MISCELLANEOUS (DESIGN AND CONSTRUCTION)

AC 27.871 § 27.871 LEVELING MARKS.

a. Explanation. Reference marks are required for leveling the rotorcraft on the ground. These marks are necessary for accurate determination of weight and balance effects, particularly after modifications to the basic rotorcraft.

b. Procedures.

(1) Reference marks are sometimes provided in pairs, one high in the cabin and one low. The plumb weight is suspended from the high mark by an appropriate mechanical attachment, and the lower mark is used to level the rotorcraft by centering the plumb weight. The lower reference mark should be a raised or depressed target symbol and shall be applied to a permanent structural component or permanently attached plate in a readily accessible location. Seat tracks, floors, or door sills which are attached with permanent fasteners are typical locations.

(2) Horizontal reference marks, for support of bubble levels, may also be used, particularly for smaller rotorcraft.

AC 27.873 § 27.873 BALLAST PROVISIONS.

a. Explanation.

(1) This rule requires that ballast provisions prevent inadvertent ballast shifting while in flight or as a result of a landing. Shifting of the ballast may cause a hazardous change in the center of gravity thereby affecting rotorcraft controllability.

(2) Other rules noted here allow removable and fixed ballast and require markings or placards to prevent overloading the ballast installation.

(i) Section 27.29 specifies that the rotorcraft empty weight will include any fixed ballast. Section 27.31 allows the use of removable ballast to comply with the flight requirements. However, ballast may not be adjusted (moved, reduced, or increased) in flight.

(ii) Section 27.1541 requires conspicuous and durable markings or placards. Section 27.1557 requires placards stating allowable maximum weight, distributed loading, if necessary, and other appropriate limitations for ballast installation.

(3) Section 27.1583(c) concerns Rotorcraft Flight Manual instructions and information about removable ballast or loading information. The instructions must be included in the operating limitations section of the flight manual to allow ready observance of the limitations.

b. Procedures.

(1) The ballast installation may be substantiated by analysis or by static test. The design ultimate load may be derived from flight, landing, or minor crash conditions load factors specified in the rules. Substantiation by analysis will require use of the fitting factor prescribed by § 27.625 where appropriate. If static tests are to be conducted, a test plan should be prepared, submitted for evaluation, and agreed upon prior to the test.

(2) Ballast installations in the aft part of the fuselage and tail boom may be subject to significant landing condition angular inertia load factors as well as the usual linear load factors.

(3) Substantiation methods and procedures acceptable for the airframe substantiation may be used for the ballast installation as well.

(4) Removable ballast will require attention to ensure the ballast is secured easily and properly and will remain secured under the appropriate ballast design load factor requirements. The flight manual instructions should be evaluated for compliance with § 27.1583(c) by flight test and airframe personnel.

(5) The installation must be designed and placarded or marked for the maximum allowable ballast load and for other appropriate loading limits. Normally compliance with § 27.1541 is accomplished with a drawing review by airframe personnel along with a MIDO or FSDO compliance and conformity inspection. An additional compliance inspection by airframe personnel can be conducted if desired.

CHAPTER 2. PART 27
AIRWORTHINESS STANDARDS
NORMAL CATEGORY ROTORCRAFT

SUBPART E - POWERPLANT

POWERPLANT - GENERAL

AC 27.901. § 27.901 (through Amendment 27-20) INSTALLATION.

a. Section 27.901(a)

(1) Explanation. Paragraph (a) provides a definition of parts of rotorcraft for which safety requirements are set forth under the general title, SUBPART E - POWERPLANT. These parts include not only major propulsion elements and power transmission components but also controls, instruments, safety devices, including fire protection and other devices to protect personnel, and critical flight structure in event of fires.

(2) Procedures. To ensure that no certification aspect is overlooked in establishing compliance, certification engineers should make at least an informal breakdown of all components of the rotorcraft, assigning responsibility to powerplant certification engineers of all items within the above definition. While this procedure is usually straightforward, the following items of FAA/AUTHORITY powerplant responsibility are listed to minimize questions regarding authority and responsibility.

(i) Drive system components. All parts of the transmission, clutches, shafting, including the driveshafts (masts) of main and auxiliary rotors, powerplant cooling components, and powerplant instrumentation requirements under §§ 27.1305, 27.1337, 27.1543, 27.1549, 27.1551, 27.1553, 27.1555, and 27.1583.

NOTE: The division of responsibility between FAA/AUTHORITY airframe engineers and FAA/AUTHORITY powerplant engineers (in accordance with FAA/AUTHORITY practice) regarding the driveshaft is at the flange or spline interface between the driveshaft and the rotor hub. Rotor hubs, controls, blades, and associated components are the airframe engineers' responsibility. (Industry practice may not agree with this concept.)

(ii) Engines, except for mount structure.

(iii) Auxiliary power units, except for mount structure.

(iv) Combustion heaters, except for downstream ventilation air ducting, mixing, and distribution systems and for electrical aspects of controls and safety devices.

(v) Water/alcohol or other fluid power augmentation systems.

(vi) Engine induction systems including induction icing and snow ingestion, and exhaust systems, including exhaust shrouds and drains.

(vii) All fuel systems, including those serving engines, auxiliary power units, combustion heaters, power augmentation systems, etc., and vents and drains for those systems.

(viii) Oil systems for engines, auxiliary power units, rotor drive transmissions, and gearboxes, including grease lubrication.

(ix) Cooling aspects of engines, rotordrive transmissions and gearboxes, and auxiliary power units.

NOTE: Electrical generating equipment and hydraulic component cooling may be the responsibility of the systems and equipment engineer provided agreement is established among responsible personnel.

(x) Rotor brakes, except hydraulic and electrical aspects and structural aspects of nonrotating brake components.

(xi) Fire protection, including firewalls, fire extinguisher systems, fire detector systems, flammable fluid lines, fittings, and shutoff valves. The powerplant engineer has responsibility for evaluating compliance with §§ 27.861 and 27.863 as it pertains to fuel and oil systems.

(xii) Engine and transmission cowling and covering, including latches.

(xiii) Powerplant flexible controls.

(xiv) Powerplant accessories.

(xv) Pneumatic systems (engine bleed air) within the engine compartments, including shut-off valves and engine isolation features of bleed systems.

(xvi) Powerplant aspects of instrument markings and powerplant aspects of flight manuals, including limitations, normal and emergency procedures, engine performance; powerplant aspects of maintenance manuals, with emphasis on the limitations section of the manual and verification of the limitations established under § 27.1521.

b. <u>Section 27.901(b).</u>

(1) Explanation. Paragraph (b) requires that the various powerplant components and systems be investigated for general airworthiness.

(2) Procedures.

(i) Each item of the powerplant area of responsibility should be shown to be suitable for its intended purpose and installed to operate satisfactorily and safely between normal inspections and overhauls. Accessories mounted on engine or transmission drive pads should be determined to be compatible with the pad limits, including fit and speed range, overhang moment loads, running torque and static torque. This latter term pertains to protection of the engine or transmission which drives the accessory from damage to be expected from malfunction of the accessory. This protection is usually supplied by providing a shear section in the accessory drive shaft designed to fail before exceeding the static torque limit of the engine or transmission driving component. Note that when evaluating the strength of the mechanical shear section, material allowables quoted in materials handbooks should not be used since these are minimum strength values. Shear sections should consider maximum strength values to be expected which are on the order of 130 percent of the minimum strength values. Also, it should be verified that design data for shear sections are dimensioned to limit the maximum diameter as well as the minimum diameter. Installation of starter-generators may also require verification that horsepower extraction limits are not exceeded. Special flightcrew instructions in the flight manual to monitor generator load or to disconnect electrically loaded items to protect accessory or engine-transmission pad limits should be avoided.

(ii) Environmental qualification requires consideration or protection against adverse effects of extremes of cold weather, salt and sand/dust atmosphere, altitude effects, etc. Most powerplant components are subjected to many of these aspects during the individual qualification tests; however, satisfactory overall integrated system performance under these adverse conditions must be verified. Cold weather testing should include verification that lubricating oils and greases function properly, and that engine starting procedures are safe and do not impose excessive loads on accessories, engines, or drive system components. Powerplant engineers should coordinate compliance efforts in this area with system engineer's investigations of compliance with §§ 27.1301 and 27.1309. Full-scale rotorcraft operations in cold weather should be required, including at least some exposure in the range of -10° to -20° F if the aircraft is to be certified to these ambients. Cold soak or overnight exposure to cold weather is appropriate followed by starting and pre-takeoff procedures in accordance with the flight manual. Attention should be given to the practicality of important mandatory inspection procedures as affected by cold weather.

(iii) Accessibility for maintenance should be reviewed. Typically, some maintenance activities must involve disassembly or removal of adjacent components. This should be avoided if repetitive activity can jeopardize the performance of critical or safety-related equipment. Verify that easy access exists to items such as oil system

sight gauges or dip sticks, filler ports and drain valves for engines, auxiliary propulsion units, transmissions, fuel tanks and filters, etc.

(iv) Electrical interconnections to prevent difference of potential should be provided in the form of grounding straps or wires sized to carry the currents to be expected. Verify that the attachments for these grounding devices are not compromised by paint or zinc chromate which will tend to electrically insulate the engine or component. Note that engine mount structure should not be accepted as a grounding device since electrical current will cause corrosion at attach points.

(v) Axial and radial expansion of turbine engines is usually not a problem unless redundant mount arrangements are used. Special expansion provisions are usually required if engine components other than mounting points are attached to bulkheads, firewalls, other engines, or drive system components. Engine output shaft axial or bending loads due to thermal expansion and to deflection of supports under ground or flight loads should be checked. Other components of concern are compressor inlet flanges, exhaust ducts, and rigid fluid or air lines between aircraft structure and the engine. The engine installation data will provide limit loads to be considered for parts of the engine which normally are attached to airframe components.

c. Section 27.901(c).

(1) Explanation. Paragraph (c), in conjunction with the installation manual requirements of § 33.5, is intended to assure compliance with the detail installation requirements developed by the engine manufacturer to assure safe, continued operation of the engine.

(2) Procedure. Compliance with most of the detail requirements in the engine installation manual can be established by test or by design features and arrangements negotiated between the rotorcraft manufacturer and the FAA/AUTHORITY powerplant engineer. Some aspects, usually involving inlet and/or exhaust distortion limitations, vibration limitations and aircraft/engine interface items may require direct assistance and information from the engine manufacturer to determine that compliance with the installation manual exists. Fuel control/engine/rotor system torsional matching is usually a developmental problem to be worked out before presentation of the rotorcraft to the FAA/AUTHORITY; however, final flight tests for surge or stall, torsional stability, and acceleration/ deceleration schedules may require direct coordination among FAA/AUTHORITY installation engineers, engine manufacturers' representatives, and the FAA/AUTHORITY engine certification engineers. Reciprocating, carburetor equipped engines usually require a particular carburetor configuration to achieve adequate engine cooling. This configuration, identified as a "carburetor parts list," must be approved for the engine under Part 33 and should be listed on the type data sheet for the rotorcraft.

AC 27.901A. § 27.901 (Amendment 27-23) INSTALLATION.

a. Explanation. Amendment 27-23 changes § 27.901(b)(1) to require a satisfactory determination that the rotorcraft can operate safely throughout adverse environmental conditions such as high altitude and temperature extremes. This amendment was needed to provide consistent application of the environmental qualification aspects of the installation. This amendment also added a new paragraph (§ 27.901(b)(5)) to require design precautions to minimize the potential for incorrect assembly of components and equipment essential to safe operation.

b. Procedures. All of the policy material pertaining to this section remains in effect with the addition of design precautions. Design precautions should be taken to minimize the possibility of improper assembly of the components essential to the safe operation of the rotorcraft. Fluid lines, electrical connectors, control linkages, etc., should be designed so that they cannot be incorrectly assembled. This can be achieved by incorporating different sizes, lengths, and types of connectors, wires, fluid lines, and mounting methods. The applicant should perform a detailed maintenance assessment to clearly define the maintenance requirements, reliability, and serviceability of the drive system design. The applicant should consider all design qualification tests and service history data, if available. A review of accident data supports the importance of this assessment. Some applicants have utilized drive system vibration monitoring to verify continuing safe operation of their drive system.

[The remainder of this page intentionally left blank.]

[This page left intentionally blank.]

AC 27.903. § 27.903 (Amendment 27-11) ENGINES.

[See new AC 27.903B (dated 9/17/2009) posted as separate document in RGL with this Master AC.]

a. Engine Type Certification.

(1) Explanation. Section 27.903(a) is intended to ensure that engines used in type certified aircraft are properly qualified and that the associated installation requirements are established.

(2) Procedures.

(i) Compliance can be documented by verification that a type certificate data sheet has been issued by the FAA/AUTHORITY for the engine identified by the rotorcraft manufacturer as the engine planned for use in the rotorcraft. Reciprocating engines must have been qualified to a special test plan (§ 33.49(d)) to be eligible in rotorcraft. This eligibility should be verified by a note on the engine type certificate data sheet.

(ii) On some occasions, the engine certification program is conducted concurrently with the rotorcraft certification program. This is technically acceptable provided the engine type certificate is issued prior to the rotorcraft type certificate. However, practical considerations involving the use of unapproved engine installation data and the probability of engine design changes during the engine certification program that impact the rotorcraft certification program dictate that special procedures must be introduced to assure that the final rotorcraft certification program is satisfactory. If the engine under consideration is merely a minor model change from a previously certificated engine and these changes are unlikely to cause rotorcraft certification problems and do not involve significant installation aspects, the rotorcraft project engineer need only to follow the engine certification program by routine checks with the FAA/AUTHORITY office responsible for engine certification and, as a final pre-type certification item, verify that the engine type certificate has been issued. Rotorcraft Type Board agenda/minutes should reflect the ongoing status of the engine TC program. For rotorcraft certification programs involving new or significantly changed engines, the powerplant certification engineer for the rotorcraft should become as familiar with the engine as practicable with particular attention to engine ratings, limitations, performance, engine/rotorcraft interface aspects, and any Part 27 certification requirement involved in the engine program (fuel/oil filters, fuel heaters, integral firewalls, etc.) and establish an appropriate working arrangement with the FAA/AUTHORITY engine certification office to monitor changes in the engine certification progress which may impact the rotorcraft certification program. In addition, any rotorcraft certification activity such as test plans, analysis, compliance inspections, etc., which involves the engine should be accepted on a conditional basis; i.e., pending confirmation of completion of the engine program without changes pertinent to these aspects of rotorcraft program. The rotorcraft applicant should be advised of any limitations in this procedure, and that normally, the engine certification program should

be complete before authorizing formal FAA/AUTHORITY participation in the rotorcraft certification plan; i.e., TIA.

b. Engine cooling fan protection.

(1) Explanation. Section 27.903(b) is intended to provide safety to the rotorcraft in the event of an assumed cooling fan blade failure or to prescribe a test to show that the cooling fan blade retention means is sufficient that blade failure is not a consideration.

(2) Procedures. The applicant may select § 27.903(b)(1), (b)(2), or (b)(3) to show compliance with this section. If § 27.903(b)(1) is selected, a demonstration should be conducted to show that at the maximum fan speed to be expected, a failed blade is contained within a housing or shroud which is included in the proposed type design and designated by the applicant as the containment shield. The rotational speed required may be related to an overspeed limiting device or to the maximum transient speed to be expected from analysis or test of the system or component which drives the fan. For components driven directly by the engine, output shaft disconnect and the subsequent terminal speed of the engine may set the test condition. To conduct an overspeed blade failure containment demonstration, applicants have found it convenient to progressively weaken a blade to induce failure at or above the required demonstration speed. Blade failure may be expected to subsequently fail some or all of the remaining blades. This condition, provided all blades are contained, is acceptable for showing compliance with this rule. However, the corresponding loss of cooling may be unacceptable if it causes the loss of any function essential to a controlled landing.

(3) Section 27.903(b)(2) may be selected; however, without containment, damage to any component or structure in the plane of the fan rotor or any other trajectory to be expected should not cause the loss of any function essential to a controlled landing.

[The remainder of this page intentionally left blank.]

[Section AC 27.903 continued on the next page.

(4) If § 27.903(b)(3) is selected, a spin test at 122.5 percent of the maximum speed associated with either engine terminal speed or an overspeed limiting device would be acceptable to show compliance. No failure should occur and distortion should not result in fan element contact with housings or other adjacent components. (Note: 150 percent of the centrifugal force is achieved at 122.5 percent of the rotational speed.)

c. Turbine Engine Installation.

(1) Explanation. The certification of turbine engines and particularly, the qualification of turbine rotors, assumes that the limitations established during these certifications will be accurately and rigorously observed during ground and flight operations in an aircraft. This paragraph is intended to promote this concept.

(2) Procedures. Primary engine limitations in the form of time, gas temperature, torque, and rotational speed and their corresponding allowable transient values are defined in the approved engine installation manual. The rotorcraft manufacturer must provide reliable, accurate means to assure that these limitations are not exceeded. These means may be in the form of automatic limiters or by crew monitoring of appropriately marked instruments. The FAA/AUTHORITY powerplant certification engineer and the rotorcraft manufacturer's staff should verify these aspects by:

(i) Evaluating all applicable instrument, indicator, or warning devices, including transmitters, and limiting devices, if any, for system tolerances.

(ii) Closely reviewing the component qualification reports of items in 398c(2)(i) above to verify that these devices are properly qualified and that any deviations are acceptable.

(iii) Assuring that maintenance data is provided for functional checks and calibration of instruments and devices which are used to monitor or protect critical turbine rotor limitations. Preflight checks for automatic limiter devices may be appropriate.

(iv) Verifying that instrument markings are clear and relatively simple, that corresponding flight manual instructions and descriptions are straightforward and complete, and instruments are located and orientated to minimize the probability of reading error.

AC 27.903A. §27.903 (Amendment 27-23) ENGINES.

a. Explanation. Amendment 27-23 adds a requirement to § 27.903(a) that requires reciprocating engines used in rotorcraft to be certified in accordance with the special rotorcraft engine test requirements in § 33.49(d). This change was needed to

ensure that certification requirements are not overlooked when reciprocating engines are installed in rotorcraft to be certified under Part 27 requirements. Section (b) was revised to prescribe tests and qualifications for powerplant area cooling fans. This rule change requires cooling fans to be designed and installed to enable safe landing of the rotorcraft following a fan blade failure. Compliance with the previous requirements could result in hazards to the rotorcraft with the loss of cooling air to critical powerplant components. A new paragraph was also added to the rule for cooling fans, which are part of the powerplant installation. It should be determined that no cooling fan blade resonant conditions exist within the operating limits of the rotorcraft unless a fatigue evaluation is conducted. These requirements will ensure that correct qualification procedures are used for rotorcraft engines and that all powerplant cooling fans are properly tested.

b. Procedures.

(1) Engine type certification. All engines installed in rotorcraft should have a type certificate. The specific certification requirements for reciprocating engines when installed in rotorcraft are found in the paragraph listed in Part 33. Engines certificated under other approved certification rules (CAR Part 13 and FAR § 21.29, for imported engines) are also eligible. If a component, system, or arrangement is certified under Part 33 or other requirement, the applicant is not relieved of the necessity to comply with the requirements of Part 27. If the component, system, or arrangement, supplied as a part of a certificated engine, meets the Part 33 and Part 27 requirements, subsequent changes to these components, systems, or arrangements could negate compliance with Part 27.

(2) The applicant may select §§ 27.903(b)(1)(i), (b)(1)(ii), or (b)(1)(iii) to show compliance with this section.

(i) For compliance with § 27.903(b)(1)(i), a demonstration should be conducted to show that at the expected maximum fan speed, a failed blade will be contained within a housing or shroud that is included in the proposed type design and designated as the containment shield. The maximum fan rotational speed may be related to an overspeed limiting device or to the expected maximum transient speed from analysis or test of the engine, system, or component which drives the fan. For fans driven directly by the engine, output shaft disconnect and the subsequent terminal speed of the engine may establish the maximum fan speed for the test condition. To conduct an overspeed blade failure containment demonstration, applicants have found it convenient to progressively weaken a blade to induce failure at or above the required demonstration speed. Blade failure may be expected to subsequently occur on some or all of the remaining blades. This condition, provided all blades are contained, is acceptable for showing compliance with this rule. However, the corresponding loss of cooling may be unacceptable if it causes the loss of any function essential to continued safe flight and landing.

(ii) For § 27.903(b)(1)(ii) compliance, if containment protection is not installed, damage to any component or structure within the trajectory of the failed fan rotor should not cause the loss of any function essential to a controlled landing.

(iii) For § 27.903(b)(1)(iii) compliance, a spin test should be conducted. For fans driven directly by the engine, the test should be conducted at 122.5 percent of the terminal engine rotational speed that will occur under uncontrolled conditions, or at 122.5 percent of the maximum engine rotational speed that would be controlled by a reliable, approved engine overspeed limiting device. For fans driven by the rotor drive system, the test should be conducted at 122.5 percent of the maximum rotor drive system rotational speed expected in service, including transients.

(Note: Capability to withstand the ultimate load of 1.5 times the centrifugal force means that no failure should occur and distortion should not result in fan element contact with housings or other adjacent components during the 122.5 percent spin test which equates to 150 percent centrifugal force).

(3) Fatigue. If the cooling fan is not included in the fatigue evaluation under § 27.571, it should be shown that the cooling fan blades are not operating at resonant conditions within the normal operating limits of the rotorcraft.

[See new AC 27.903B (dated 9/17/2009) posted as separate document in RGL with this Master AC.]

AC 27.907. § 27.907 ENGINE VIBRATION.

a. Explanation. Section 27.907 is intended to require the design of the rotor drive system, including the engine, to be free from harmful vibration. A vibration investigation is required.

b. Procedures. Review Order 8110.9, Handbook on Vibration Substantiation and Fatigue Evaluation of Helicopter and other Power Transmission Systems. Note that the mechanical coupling of the engines to the rotor drive system creates, for torsional vibration considerations, one, rather complicated, drive system which responds to any forced or resonant frequency. Antinodes or nodes and frequencies may exist in the engine shaft which are absent when the engine is operated on a test stand; therefore, the vibration investigation conducted under Part 33 is not conclusive with respect to torsionals. As noted in Order 8110.9, the engine manufacturers' assistance is necessary to find compliance. Section 27.571 was amended by Amendment 27-12 to include "rotor drive systems between the engines and the rotor hubs" as part of the flight structure. This rule supplements § 27.907 and requires coordination with the structures certification engineer to avoid duplication of effort by the rotorcraft manufacturer. AC 27 MG 11, which provides acceptable methods of compliance with § 27.571, may also be used to find compliance with § 27.907.

In addition to basic drive system components such as main and auxiliary rotor drive shafts, the vibratory evaluation should include couplings, gear teeth, gear cases and splines, and should consider, where appropriate, low cycle fatigue associated with ground-air-ground cycles.

SUBPART E - POWERPLANT

ROTOR DRIVE SYSTEM

AC 27.917. § 27.917 (through Amendment 27-11) DESIGN.

a. § 27.917(a):

(1) Explanation. This paragraph requires the design of the drive system to include a means to automatically disengage the engine(s) from the rotor drive system in order to prevent excessive drag from an inoperative engine from adversely affecting the performance of the rotor system.

(2) Procedures. The design objective usually is met by installing a freewheeling or overrunning clutch in the drive shaft between the engine and the first part of rotor drive system. If lubrication for these clutches is required, it should be provided by a means that continues to function after an engine is made inoperative except that for single-engine rotorcraft, clutch lubrication need only be provided for autorotation descent with the engine inoperative. A 15-minute demonstration of freewheeling or overrunning operation is usually acceptable.

b. § 27.917(b):

(1) Explanation. This paragraph requires that control rotors (tail rotors, for example) will continue to be driven by the main rotors when the rotorcraft is in autorotation.

(2) Procedures. Provide hard mechanical interconnect shafting between the rotors such that the main rotor will drive the control rotor (tail rotor). Note that this requirement must be met with all engines inoperative, thus, the driving force for the tail rotors must depend on the autorotative driving forces inherent in the main rotor(s).

c. § 27.917(c):

(1) Explanation. This paragraph pertains to any device or feature designed into the rotor drive system intended to prevent damage in the event of excessive torque in the rotor drive system from high engine power or mechanical interference with normal rotation of the rotor drive system. The rule prohibits location of these devices in any part of the rotor drive system that is required to continue functioning to provide control of the rotorcraft.

(2) Procedures. Review the arrangement of the rotor drive system to determine that any intentionally designed weak links in the system, such as shear sections or slip clutches installed to relieve high torsional loads, are located so that their function will not

compromise the interconnect mechanism between the main and auxiliary rotors of the rotorcraft.

d. § 27.917(d):

(1) Explanation. This paragraph sets forth a definition of the rotor drive system and its associated components.

(2) Procedures. Coordinate with other certification personnel to ensure that other rules pertaining to rotor drive systems are properly addressed.

AC 27.921. § 27.921 ROTOR BRAKE.

a. Background. Rotor brake safety requirements are intended not only to prevent adverse effects on aircraft performance due to brake drag but also to minimize the possibility of fire. These fires, caused by friction from a dragging rotor brake, have occurred both in flight and during ground operation with extremely hazardous consequences.

b. General. This rule requires (1) that any limitations on the use of the rotor brake must be established, and (2) that the control for the brake must be guarded to prevent inadvertent operation.

c. Limitations.

(1) The limitations on the use of the rotor brake should first be defined by the applicant and will normally consist of merely the maximum speed eligible for application of the brake. In some installations, other limitations associated with engine operation may be specified.

(2) Control guard mechanisms to prevent inadvertent operation may be conventional. A cockpit evaluation of the guard should be conducted by flight test personnel to affirm the function of the guard, that markings, if any, are adequate, and that both latched and unlatched positions of the guard do not interfere with other cockpit functions.

d. Other rules require both generalized and specific rotor brake qualification tests. However, some significant aspects of brake safety tests are listed below for reference.

(1) Routine application of the brake at shutdown during the endurance test of § 27.923 and during the function and reliability tests of § 21.35.

(2) Torsional vibration loads in the rotor drive system and oscillatory loads in the brake components during a critical brake engagement procedure should be determined with appropriate consideration in the fatigue evaluation for these

components. Brake engagements should be conducted with and without collective control displacement as authorized by the flight manual or a training manual.

(3) Brake component temperature measurements during a critical brake application in conjunction with an evaluation of the general brake compartment for compliance with § 27.863.

(4) Placards, decals, and flight manual limitations and instructions appropriate to operate the rotor brake safely.

(5) An evaluation for hazardous failure modes as required by § 27.1309(b). If the brake hydraulic system is integral with the rotorcraft hydraulic system, failure modes of pressure regulators and control valves will be of interest. Mechanical cams, calipers, and levers may be prone to seize or fail to release the brake due, in part, to corrosion and lack of lubrication to be expected when brake components encounter high temperature cycling.

e. Maintenance manuals should be checked for completeness in the areas of wear limits for both pucks and disks, for disk warp limits, and for defects which induce brake chatter. Also, maintenance data to check for proper function of pressure modulating/relief devices should be included since misadjustments of this device can amplify the stresses and temperatures in the system.

AC 27.923. <u>§ 27.923 (Amendment 27-12) ROTOR DRIVE SYSTEM AND CONTROL MECHANISM TESTS</u>.

a. <u>Explanation</u>.

(1) This section is intended to require demonstration that the rotor drive system, as defined in § 27.917(d), is capable of normal operation within the limitations proposed, without hazard of failure from excessive wear or deterioration due to mechanical loads. The basic test is not designed and should not be expected to demonstrate safety from oscillatory stresses normally investigated under §§ 27.571 and 27.907, although any data generated by these tests applicable to showing compliance with §§ 27.571 and 27.907 may be used. Some variations in the endurance test plan to generate data applicable to the vibration substantiation effort or other qualification aspects may be acceptable if the basic requirements of the endurance test are preserved.

(2) This rule requires a series of runs consisting of a 60-hour, 30-hour, and 10-hour run for a total of (at least) 100 hours of testing, not including time required to adjust power or to stabilize operating conditions for those conditions that require stabilization. Extension of the total test time beyond 100 hours (or extension of any test run segment beyond the minimum) will occur if qualification for the 2 ½-minute one-engine-inoperative (OEI) optional rating is proposed by the applicant. The 30-minute OEI rating qualification test will extend the test beyond 100 hours for rotorcraft equipped with three or more engines.

(3) Section 27.923(b) requires the test to be conducted “on the rotorcraft.” This means a rotorcraft in conformity to the design for which approval is requested. However, many nonconformity features, such as doors, some cowling and instrumentation, fuel tanks (alternate external fuel supply may be utilized), interior features, fire detectors, extinguishers, inlet ducts, exhaust baffles, etc., may be acceptable provided each item is technically considered and found to be unimportant to the test results. Any significant deviations from the conformed rotorcraft configuration, such as using ground or flight test facilities instead of the rotorcraft, providing the conditions which exist on the rotorcraft can be accurately duplicated, should be defined in the test proposal and approved by the cognizant FAA/AUTHORITY engineering staff. The restraint (tie-down) arrangement used during the test will necessarily be arranged to react rotor thrust loads in lateral as well as vertical directions. However, the restraint should permit normal deflections due to rotor thrust in the engine and drive system support arrangement. Safety cables may be installed normal to the tailboom at the tail rotor gearbox location; however, restraint may be provided to keep airframe deflections from exceeding those expected in normal and accelerated flight.

(4) The test torque requirements of § 27.923 mean the torque values for which approval is requested, but must not exceed the values approved for each respective limit for the engine being used. However, an applicant should be allowed to qualify the rotor drive system for torque values higher than those for which approval is requested if the engines actually used are capable of the torque and can be shown by an output shaft torsional investigation to be equivalent or conservative with respect to torsional vibration to the engines proposed for the initial certification configuration. Variations in rotational speed from the certification values should not be allowed except where careful evaluations of vibration aspects, bearing loads, centrifugal stiffening effects, and torque variations are conducted.

(5) The rotor configuration required by § 27.923(b) is intended to ensure that lift, torque, and vibration loads to be expected in service are introduced into the endurance test, although the presence of the vibration aspects does not normally satisfy the vibration evaluations required by §§ 27.571 and 27.907. In fact, vibration modes may be changed and amplified by the tie-down restraints and the increased thrust to be expected from in-ground-effects on the rotor system. These effects, although unquantified, are intended as a normal part of endurance testing. Preproduction rotor blades have been successfully used in endurance tests but only after specific investigations of blade properties such as stiffness, inertia and inertial distribution, thrust and blade bending, and torsional frequency response have been carefully compared to ensure validity of the test. The endurance test includes testing the rotor control mechanism. Conformity of the rotors may be very significant to this aspect of the test.

(6) For approved designs, some drive system changes or mechanical power increases may only require partial testing to satisfy § 27.923 requirements provided an equivalent level of safety finding can be made for the remaining requirements based on the previously approved data.

b. Procedures.

(1) Section 27.923(a) requires the rotor drive system and rotor control mechanism to be in a serviceable condition at the end of the test. Verification of this requirement requires a complete disassembly and examination of the entire rotor drive system and rotor control mechanism. The disassembly itself should be closely monitored for evidence of adequate breakaway torque on all bolted fasteners. Samples of lubrication from oil sumps and filters should be retained for spectrographic analysis, and seals should be examined for possible damage due to test requirements. Care should be taken to differentiate between seal damage and bearing damage due to disassembly procedures so that the direct results of the test may be properly considered. Close visual observation of each tooth on each gear is necessary to affirm proper load/contact patterns and absence of excessive surface stress or scrubbing motions. Bearings should be examined to verify that ball or roller paths are within limits, bearing cages are undamaged, and bearing balls or rollers and their races are free from pitting. Any evidence of bearing races turning or spinning in respective housing or bores probably indicates design or fit deficiencies. The applicant should have available wear limits data which include items such as distance across pins and tooth profile limits for gears. Many of these items require special, close tolerance inspection equipment and trained inspectors to determine compliance. In some instances, bearings, clutches, oil pumps, etc., should be returned to the original manufacturer for a finding of serviceability. Localized overheating usually exhibited by discolorations is an indication of an unsatisfactory condition. Should any of the items discussed above or other defects appear such that the component is unserviceable, a redesign which includes recognizable improvements should be required before authorizing a retest. To simply “try again” in hopes of success should not be accepted.

(2) Section 27.923(a) also prohibits intervening disassembly which might affect test results. Generally, this simply means no disassembly whatsoever. However, some very limited disassembly can usually be conducted provided care is used to ensure that items such as critical fastener torques or gear backlash controls are not disturbed.

(3) Section 27.923(b) requires that each rotor drive system and control mechanism be tested for not less than 100 hours. This endurance test is intended to demonstrate a minimum level of reliability and proper functioning of this system. The test should be conducted on the rotorcraft to provide the most realistic test environment. Exceptions can be made only if a ground or flight test facility is used that closely simulates the support and vibration conditions existing on the actual rotorcraft. The rotor system installed on the ground test article should be the same as that used on the flight test vehicle. If significant productivity changes are made after completion of the tests, retesting may be required.

(4) In § 27.923(c), (d), (e), and (f), the runs should be made with the proper torques, rotor speeds, and control positions specified by each paragraph. The controls discussed in each paragraph are the flight controls; i.e., cyclic and directional controls

for rotorcraft with tail rotor and single main rotor. The collective control is normally used to set power and is not involved in the control cycling described in § 27.923(h). During control cycling the controls may be cycled from stop to stop, or a limited travel may be accepted if the travel produces the maximum fore and aft, left and right, and yaw thrust components of the rotors as measured in flight for a particular flight condition. One method of determining the required control displacement is to measure main rotor mast bending in level forward flight at maximum continuous power (or the power associated with the maximum rearward flight speed to be expected) for the aft control displacement limit. Using the same mast bending instrumentation with the rotorcraft in the ground tie-down situation and with collective control set for maximum continuous power, displace the cyclic fore and aft to obtain the same mast bending as measured in flight. Similar measurements and control displacements may be used for sideward thrust components. Yaw control displacement should consider maneuver requirements in conjunction with sideward flight. Critical gross weight and center of gravity should be used to establish test conditions. Vertical thrust may be used during the takeoff run and the runs at 2 ½-minute power. OEI runs should be conducted with the cyclic set for maximum forward thrust for the 30-minute power run and at maximum vertical thrust for the 2 ½-minute power run. For these runs and any run that does not specify the position for the yaw control, that control should be set to react main rotor torque.

(5) Section 27.923(e) prescribes the takeoff portion of the endurance test. This is a 10-hour test that must be run at not less than the maximum torque and the maximum RPM to be approved for takeoff. For this test the main and auxiliary rotor controls should be in the normal position for vertical ascent. If the applicant elects (for a multiengine rotorcraft) to perform the 2 ½-minute OEI power test, a series of three 2 ½-minute repetitive runs should be conducted during the course of the 10-hour test. For these tests, main and auxiliary rotor controls should be in the position for vertical ascent, and power settings for the operating engine should provide red line torque (or manifold pressure) and RPM for the 2 ½-minute OEI power rating. The nonoperating engine may be allowed to operate at idle or may be shut down.

(6) The torque and speed requirements in § 27.923(e) for the optional 2 ½-minute OEI tests should be interpreted as described above for the takeoff runs. If the test is conducted during warm ambient conditions, excessive engine gas temperatures may be required to achieve the torque and speed conditions required by this part of the test. Minor adjustments in the run schedule may be allowed to take advantage of cooler nighttime ambient temperatures. Addition of water/alcohol systems to increase engine hot-day power may be appropriate in some instances. Liquid nitrogen spray into engine inlets has also been used to depress inlet temperatures sufficiently to obtain test conditions.

(7) The requirement in § 27.923(g) for declutching the engine may be difficult to achieve if engine decelerations and rotor system decelerations rates are similar. In some cases, the engine fuel control deceleration schedule may be adjusted to achieve clutch disengagement; otherwise, an engine shift brake mechanism may be needed.

(8) Tests described in § 27.923(h) should be conducted under the conditions of maximum continuous power and RPM as described in § 27.923(c).

(9) Section 27.923(i) requires 200 clutch engagements. This test is prescribed to establish a level of reliability of clutch components installed as a part of the rotor drive system of rotorcraft. The clutch tests apply to all clutches installed to comply with § 27.917(b), and each such clutch must be tested. A rotor brake is not required for certification, although a brake of some type may be installed temporarily to facilitate conducting the clutch testing required by this section. Clutch disengagement is also required by this section; thus, malfunction of the disengagement feature would be a basis for discontinuance. Some rotorcraft configurations (those with single-spool turbine engines or reciprocating engines) include an additional clutch to decouple the engine from the drive system to facilitate engine starting. These clutches should also be exercised at least 200 times during this test.

(10) Section 27.923(j) sets forth the optional tests to be conducted if a 30-minute OEI rating is requested. Flight control positions should be set for level flight or climb, whichever produces the maximum forward thrust component, and the antitorque system control should be set to react the maximum rotor torque. The torque and rotational speed values should be the maximum for which approval is requested.

c. Additional Test Considerations.

(1) Pressure Lubricated Gearboxes. The endurance test hardware can be adjusted/modified to sustain high-limit oil temperature and low-limit oil pressure to provide a basis for approval of the values listed as limits. A minimum of 20 hours at maximum continuous torque and maximum continuous rotational speed should be involved in the test. Other parameters such as minimum oil temperature and maximum oil pressure may more appropriately be evaluated by bench test. The significant points here are effects of extremely high oil pressure (due to the high viscosity of cold oil) on any positive displacement oil pump, on filters for possible collapse, on oil coolers for possible rupture due to internal pressure, seals, bypass valves, and most important, adequate lubrication of gears, bearings, etc., under conditions of minimal oil flow. Normally, an operational restriction against exceeding idle power/speed conditions until significant warm-up occurs is prescribed. Individual component qualification tests may provide data to meet some of these aspects.

(2) Asymmetric Power Inputs. The existing endurance test schedule does not necessarily provide for any asymmetric power inputs from multiengine drive system arrangements. For this situation, the drive system should at least be subjectively evaluated for possible hazards or excessive loads to be expected from asymmetric torque inputs. If required, additional testing should be considered.

(3) Accessory Drives. Normally, all accessory drives on a gearbox will be loaded during the endurance test. Electrical load banks or other suitable methods may be used to ensure that the generator drives are loaded and thus properly qualified.

Hydraulic pumps may be loaded by resetting hydraulic system relief valves to maintain limit pressure (load) continuously. If this condition is excessively severe, a method of load cycling may be appropriate. Note that accessory loads reduce the power available to the main rotor. Also, tail rotor loads are, insofar as the transmission is concerned, another large accessory. Care should be taken to ensure that in-flight unloading of these accessory drives, including the tail rotor, does not subject the main gearbox to loads significantly beyond those qualified by endurance tests.

(4) Gearbox Oil Tanks. Normally, gearbox oil is contained in an integral cast sump which, for other reasons, has sufficient strength to obviate the need for pressure tests. However, a subjective evaluation should be made to ensure that detail design features such as sight gauges, filler caps, etc., offer adequate strength.

AC 27.923A. § 27.923 (Amendment 27-23) ROTOR DRIVE SYSTEM AND CONTROL MECHANISM TESTS.

a. Explanation. Amendment 27-23 revised § 27.923(c) to remove the references to “engine power” to avoid confusion. Previous wording could have been interpreted to mean tests prescribed by this section should be conducted at powers corresponding to engine ratings established under Part 33, rather than rotorcraft powers which may be lower than those established under Part 33, but selected by the applicant as a limit on their product. Section 27.923(d) was revised to remove the references to “engine power” and to clarify the test requirements for 30-minute and continuous OEI powers. Previously, §§ 27.923(e) and (j), as they relate to the 2 ½-minute and 30-minute power ratings, respectively, provided for only minimal testing of the capability of the rotor drive system to sustain these powers. Amendment 27-23 amended these sections to extend the testing to adequately assure valid qualification tests. These changes ensure the integrity of the rotor drive system so that it will safely sustain the higher stresses expected with actual, repeated use of these power ratings. A new § 27.923(k) was added that provides a qualification test schedule for the new, optional, continuous OEI rating.

b. Procedures. The policy material pertaining to this section remains in effect with the following additions:

(1) Section 27.923 requires a minimum of 100 hours of endurance testing.

(i) For single engine rotorcraft and others that will not have OEI ratings, the 100-hour test is comprised of 60 hours at not less than maximum continuous power, 30 hours at not less than 75 percent maximum continuous power, and 10 hours at not less than takeoff power.

(ii) For multiengine rotorcraft for which OEI ratings are requested, the test is comprised of 60 hours at not less than maximum continuous power, 25 hours at not less than 75 percent maximum continuous power, 10 hours at not less than takeoff power, and 5 hours at simulated OEI power conditions.

(2) The endurance time, cited in paragraph b(1) above, excludes the time required to adjust power or to stabilize operating conditions. Extension of the total test time beyond 100 hours (or extension of any test run segment beyond the minimum) will occur if qualification for the 2 ½-minute, 30-minute, or continuous OEI optional ratings is proposed by the applicant for rotorcraft equipped with two or more engines.

(3) The requirements in § 27.923(f) stipulate that the endurance tests conducted at maximum continuous and 75 percent maximum continuous power should be conducted in intervals of not less than 30 minutes. These tests may be conducted on the ground or in flight. The takeoff power endurance test described in § 27.923(e) should be conducted in intervals of not less than 5 minutes.

(4) The new § 27.923(k) sets forth the tests to be conducted if a continuous OEI rating is requested. Flight control positions should be set for level flight or climb, whichever produces the maximum forward thrust component. The anti-torque system control should be set to react the maximum rotor torque. The torque and rotational speed values should be the maximum for which approval is requested.

AC 27.923B. <u>§ 27.923 (Amendment 27-29) ROTOR DRIVE SYSTEM AND CONTROL MECHANISM TESTS</u>.

a. <u>Explanation</u>. Amendment 27-29 added § 27.923(e)(2) that defines qualification tests for 30-second/2-minute OEI ratings. This new paragraph also allows for the 30-second/2-minute OEI portion of the endurance test to be accomplished on a representative bench test facility using the drive system components which can be adversely affected by these tests.

b. <u>Procedures</u>.

(1) For accomplishment of the endurance test for 30-second/2-minute OEI, § 27.923(e)(2) requires that 10 applications of 30-second/2-minute OEI power be demonstrated for each power section during the 10 hour takeoff power segment of § 27.923(e). Each 30-second/2-minute OEI application should be conducted immediately following a 5 minute stabilized takeoff power run. Following the 5 minute takeoff power run, one engine must simulate a power failure and each engine providing power after the failure must apply the maximum torque and maximum speed for use with 30-second OEI power. This power level should be maintained for at least 30-seconds. The 30-second OEI power should then be followed by an application of the maximum torque and maximum speed for 2-minute OEI power for at least 2 minutes. Section 27.923(e)(2) also requires that one of the 30-second/2-minute OEI segments for each engine be accomplished from the flight idle condition.

(2) Additionally, due to the damage inflicted on the engines and the ensuing cost caused by operating the engine at these powers, the 30-second/2-minute portion of the endurance test can be accomplished on a bench test found to be representative of

the rotorcraft. The representative bench test rig should have the ability to generate the torques, speeds, vibration frequency, and acceleration rate generated by the rotorcraft. The power should have the same method/path of application as that used on the rotorcraft. The test rig should be configured with the same components used for conducting the endurance test on the rotorcraft except that the test components not affected by asymmetric power application may not have to be installed (i.e., if a combining gearbox is used it may not be necessary to have the main transmission installed on the bench test rig).

(3) The takeoff portion of the endurance test should be accomplished on the rotorcraft. When conducting the bench test for 30-second/2-minute OEI it is not necessary to repeat the takeoff portion of the endurance test; however, the simulated power failure and application of 30-second/2-minute OEI power by the remaining engine(s) should be accomplished after the input power has stabilized at takeoff power.

AC 27.927. § 27.927 (Amendment 27-12) ADDITIONAL TESTS.

a. Section 27.927(a):

(1) Explanation. This paragraph is the authority to require any special tests or investigations to establish that the rotor drive system is safe.

(2) Procedures. The certification engineer should review the design of the rotor drive system and its installation and intended operation for features or conditions that may not be adequately qualified in the tests prescribed by this part and, if necessary, additional qualification test programs should be developed and accomplished to ensure safe operation of the rotor drive system. Items of interest would include poorly defined load paths associated with redundant design features, flight deflections of structure and of mounting arrangements, and special or unusual operating procedures which may be anticipated or proposed by the applicant.

b. Section 27.927(b):

(1) Explanation. This paragraph prescribes testing to qualify the rotor drive system for the power excursions to be expected with governor-controlled engines wherein the power from the engine(s) changes automatically to maintain rotor speed at preselected values. At high collective flight control displacements, the normal rotor speed droop will result in the governor-controlled engine(s) automatically accelerating to maximum fuel flow or to any other power, speed, temperature, or torque limiting device, regardless of crew action or artificially established limitations reflected by instrument markings. This high power condition can occur typically during a normal landing when the crew applies high collective to cushion ground contact or, for multiengine rotorcraft, during any flight regime when an engine fails and the corresponding loss of power results in drooping the rotor speed. Special tests are prescribed by this section to provide assurance that the rotor drive system can safely sustain these conditions. The tests of this section should be conducted without intervening disassembly, and all rotor

drive system components should be in serviceable condition after the test. It is permissible but not required that these tests be performed on the same specimen of the rotor drive system used to show compliance with § 27.923.

(2) Procedures. Testing as prescribed by this section should be conducted on a ground-test rotorcraft conformed to the type design suggested for the endurance test of § 27.923. In most cases, testing to comply with § 27.927(b)(1) is accomplished as a continuation of the test of § 27.923 using the same test vehicle. For this test, the main rotor control (cyclic/collective) may be set to simulate vertical lift. The auxiliary rotor control (antitorque) may be set or adjusted to react main rotor torque. Rotation speed should be maximum normal for the test condition; i.e., all engines operating as for takeoff. Using the collective control, obtain torque as required to meet either § 27.927(b)(1)(i) or (ii). This will normally be 110 percent of takeoff torque or a lower value as limited by an approved, reliable device to simultaneously limit torque on all engines. If individual torque limiters are provided for each engine, rigging tolerances should be at maximum allowed mismatch for the type design. For the one-engine-inoperative (OEI) test of § 27.927(b)(2), rotor RPM droop, if any, may be allowed as would occur in service. Since this OEI test requires the remaining engine(s) to produce power not usually available under normal atmospheric conditions, supplemental power augmentation may be needed such as inlet air refrigeration, ramming, or overfueling the engine. Alternatively, bench testing with a transmission test rig may be appropriate providing close simulation of the drive system torsionals, shaft/coupling, misalignment, etc., is achieved. Overtesting (excessive torque) to compensate for inadequacies in the bench test may be negotiated with the FAA/AUTHORITY approval office. Note that compliance with § 27.903(b) requires that the remaining engine(s) be capable of safe, continued operations under the high power conditions of this test. This may require the engine manufacturer to conduct special testing or to produce suitable evidence that the stresses (and gas temperatures) associated with these governor-induced high power excursions do not compromise the airworthiness of the remaining engines or their capability to produce topping power automatically during the initial moments of flight after an engine failure.

c. Section 27.927(c):

(1) Explanation. This paragraph prescribes a test which is intended to demonstrate that in the event of a pressure failure of any pressurized lubrication system used on the rotor drive system, no failure or malfunction will occur in the rotor drive system that will impair the capability of the crew to execute an emergency descent and landing. The lubrication system failure modes of interest usually are limited to failure of external lines, fittings, valves, coolers, etc., of pressure lubricated transmissions.

(2) Procedures. Conventionally, a bench test (transmission test rig) is used to demonstrate compliance with this rule. Since this is essentially a test of the capability of the residual oil in the transmission to provide limited lubrication, a critical entry condition for the test would be the critical eligible lubricant preheated to the transmission oil temperature limit. With the transmission operating at maximum normal speed, with

lubricant as described above, with nominal cruise torque applied (reacted as appropriate at main mast and tail rotor output quills), and with a vertical load at the mast equal to gross weight of the rotorcraft at 1g, disconnect or cause to leak an external oil plumbing device. Upon illumination of the low oil pressure warning (required by § 27.1305), reduce engine input torque to zero to simulate autorotation, and continue rotation for 15 minutes. Apply input torque to simulate a minimum power landing for approximately 15 seconds to complete the test. Successful demonstration may involve limited damage to the transmission provided it is determined that the autorotative capabilities of the rotorcraft were not significantly impaired.

AC 27.927A. § 27.927 (Amendment 27-23) ADDITIONAL TESTS.

a. Explanation. Amendment 27-23 changed § 27.927 by adding a requirement that the rotor drive system overtorque tests prescribed by § 27.927(b)(3) be conducted at the maximum rotational speed intended for the power condition of the test. The previous rule only specified the torque to be applied to the rotor drive system during the overtorque test.

b. Procedures. The changes to this section did not change the suggested method of compliance.

AC 27.931. § 27.931 SHAFTING CRITICAL SPEEDS.

a. Explanation.

(1) At certain speeds, rotating shafts tend to vibrate violently in a transverse direction. These speeds are variously known as “critical speeds,” “whirling speeds,” or “whipping speeds.” The vibration results from the unbalance of the rotating system and can be shown to reach destructive values with only minimal unbalance. The nature of this phenomena is that as shaft rotational speed increases, residual unbalance in the shaft gives rise to centrifugal forces. These forces cause the shaft to rotate in a bent or bowed configuration with the centrifugal force induced bending loads being balanced by coriolis and elastic forces in the shaft. As shaft rotational speed increases, the centrifugal forces increase to the point at which they exceed the elastic forces in the shaft, and divergence occurs. This point in the speed range is called the critical speed. At shaft speeds above the critical speed, a 180° phase change occurs, the shaft’s mass center moves toward the center of rotation, and the amplitude of vibration diminishes with further increases in shaft speed.

(2) A design option would be to operate the shafting subcritical; i.e., below the first critical speed, with adequate margins between critical speed and the maximum allowable speed, including transients. However, another option, that of supercritical shaft operation; i.e., operating above the first or even higher critical speeds with adequate margins between any critical speed for the normal operating speed range may be permitted. This latter option requires some form of system damping to permit safe

transition through the critical speed range and to avoid excessive nonsyncronous vibrations or instability when transitioning through the critical speed.

(3) A review of typical design practices and drive system arrangements discloses several types of shaft support and loading:

(i) Main rotor/mast/transmission assemblies rigidly mounted to the airframe.

(ii) Main rotor/mast/transmission assemblies compliantly mounted to the airframe.

(iii) Main rotor supported through a bearing arrangement by a rigid nonrotating structure with a coaxial torque shaft driving the rotor.

(iv) Cross-shafting, interconnect shafting, tail rotor drive shafting which are generally supported by gearboxes at each end and by hanger bearings and couplings at intervals along the tail rotor drive shaft.

(v) Engine to transmission shafting which, for compliant pylons, incorporates a flexible or geared coupling, to accommodate the misalignment and chucking.

(vi) Tail rotor/mast/gearbox supported on the tailboom or near the upper extremity of a vertical fin.

(4) With regard to compliant pylon mountings, recent developments in vibration control have led to rotor isolation wherein the fuselage is isolated from the rotor and transmission, resulting in improved vibration and system reliability. Rotor isolation systems typically entail the installation of isolation devices at the transmission-airframe interface. The crux of rotor isolation is providing adequate, low-frequency isolation without excessive relative displacement or loss of mechanical stability. Rotor isolation affects shaft critical speeds in the following ways:

(i) First, the transmission mounting configuration, system stiffness, and tuning requirements may result in different fore-and-aft and lateral natural frequencies, imposing additional analytical requirements. For compliant mounting, the response while transitioning through the fundamental or rocking modes is generally controlled by dampers or elastomeric elements.

(ii) Second, the relatively high displacements permitted by the isolation system, depending on configuration, may result in variations in shaft misalignment and length thus adding further complexity to the analytical prediction of critical speeds.

b. Procedures.

(1) Subcritical Shafting Designs. Three basic methods of qualification may be considered, with the required margins relative to the degree of assurance provided. The margins are shown for guidance only.

(i) Analytical.

(A) Simplistic model(s) as shown in figures AC 27.931-1 and AC 27.931-2; 35-percent margin shown above maximum operating speed.

(B) Detailed model, taking into account significant variations in shaft stiffness, mass distribution, cone adapters, support bearing stiffnesses, support structure; 20-percent margin shown above maximum operating speed.

(ii) Analytical supported by tests. Analysis supported by shake test (rotating or nonrotating) or by bench test, where appropriate adjustments are made for differences between the bench and the aircraft; 15-percent margin shown above maximum operating speed.

(iii) Whirl test on the aircraft.

(A) For all cases, it should be shown that, under maximum permissible unbalance and at the maximum operating speed, the shafting and support structure has acceptable clearance and does not have excessive vibration.

(B) For compliant pylon mountings, damping of the rigid body rocking modes, which are often transitioned during runup to normal speed (and which are not critical flexing modes), may be verified by analyses, laboratory tests, or ground runup with the rotor at maximum permissible unbalance. Damping on the order of 5 percent equivalent viscous damping is generally acceptable.

(C) For tail rotor masts, the analysis should include fixed system structural response including tailboom, fixed control surfaces, and vertical fin. The frequency analysis will then contain both fixed system and rotating system modes. An energy analysis can then be used to identify whether the modes are predominantly fixed system or rotating system modes. Systems with up to 35-percent energy in the rotating system have been operated in the field without significant problems. For this type of shafting installation, it is advisable to avoid fixed system modes at multiples of shaft speed, particularly where highly non-isotropic mountings exist.

(2) Supercritical Shafting Design. Another facet occasionally encountered with shafting is the concept of normally operating at speeds above the critical speed, commonly referred to as “supercritical operation.” To function properly, suitable dampers must be installed to enable the shaft to pass safely through the lower critical speed up to the operating speed, and speed controls should be devised to avoid any tendency to operate continuously at any critical speed. Accurate balancing of the rotating components will also decrease the energy to be dissipated into the damping

device during transition thereby increasing its serviceability and reliability. Note that damper design and locations become more complex as selected operating speed increases through the third or fourth critical frequency. Multiple node points will exist where dampers will not be effective. Production specimen testing at high speed/high torque conditions should include checks for shaft straightness until experience verifies that shaft deflecting is not significant. For systems utilizing squeeze film dampers at the support bearings, variations in oil pressure, flow restrictions, and the effects of bearing preload should be evaluated. The effects of shaft and unbalance and the proximity of the damper to bottoming under maximum unbalance should be evaluated.

(3) If the shafting configuration of the rotorcraft includes universal joints or misalignment couplings, a velocity differential will exist across the joint which creates sinusoidal torques and bending moments at both shafts at multiples of the rotation speed. To avoid amplification of these torques and bending moments, the design should preclude coincidence of critical speeds and multiples of normal speeds.

(4) Order 8110.9, Handbook on Vibration Substantiation and Fatigue Evaluation of Helicopters and Other Power Transmission Systems, also addresses this subject. This document is distributed to section level and above in all Regional Aircraft Certification Offices.

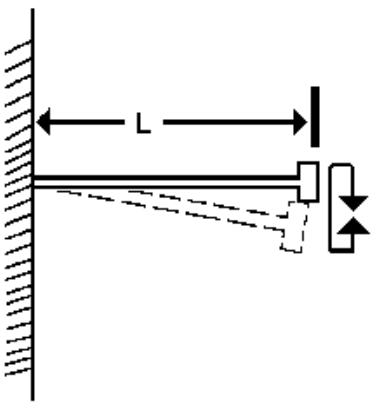

$$W_{cr} = \sqrt{\frac{k}{M + 0.23m}}$$

W_{cr} = first critical speed, RAD/SEC

k = shaft spring rate, LB/IN = $3EI/L^3$

E = modulus of elasticity

I = moment on inertia

M = mass of weight, LB-SEC^2/IN

m = mass of shaft, LB-SEC^2/IN

FIGURE AC 27.931-1 CANTILEVERED SHAFT, FIRST CRITICAL SPEED

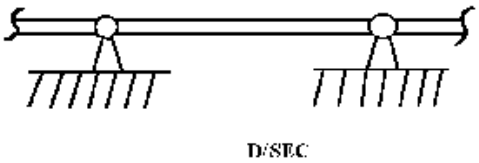

$$W_{cr} = a \sqrt{\frac{E\ I}{u\ L^4}}$$

W_{cr} = first critical speed-RAD/SEC

E = Young's modulus

I = inertia of shaft

u = mass per unit length

L = length between supports

a = a numerical constant: for first critical speed, a = $(pi)^2$ = 9.87

The numerical constant (a) for higher critical whirl modes or other shaft support systems may be derived from standard texts on this subject.

FIGURE AC 27.931-2 SHAFT BETWEEN SUPPORT BEARINGS, FIRST CRITICAL SPEED

AC 27.935. § 27.935 SHAFTING JOINTS.

a. Explanation. This rule requires the design of shafting joints to include provisions for lubrication when such lubrication is necessary for operation.

b. Procedures. Review the design of the rotor drive system for universal joints, slip joints (splines) and other shaft couplings. Lubrication access points (Zerk fittings) should be required unless the design incorporates alternate provisions for lubrication acceptable to the FAA/AUTHORITY and shown valid by test or experience.

AC 27.939. § 27.939 (Amendment 27-11) TURBINE ENGINE OPERATING CHARACTERISTICS.

a. Explanation. This section requires evaluation of engine operation, engine inlet airflow distortion, and engine/drive system torsional stability. A satisfactory rotorcraft design for all three items should be established by the manufacturer early in his development program since changes in design to satisfy these requirements are typically very expensive and will adversely impact other basic design features. The results of these evaluations are used to verify that FAA/AUTHORITY-approved Engine Installation Manual requirements are satisfied.

b. Procedures.

(1) Turbine engine operation.

(i) Explanation. Smooth, stable operation of turbine engines is essential to safety and control of rotorcraft. This can be adversely affected by rotorcraft maneuvers, turbulence, high altitude, temperature, airspeed, and installation features such as the engine air inlet duct, exhaust duct, and the location with respect to other airframe items which induce or influence air flow through the engine. Powerplant control displacement rate can also be a factor, although most modern engines incorporate internal protection for this aspect. The engine's tolerance to these factors is reflected as the "stall margin" which is established by the engine manufacturer through design and test. However, this stall margin is applicable only to an engine with a specified inlet and exhaust and at specified altitude, temperature, and effective airspeed. Typically, the specified engine inlet duct is a symmetrical bellmouth and the exhaust is a short straight duct of specified diameter and length. The stall margin, even under the above test conditions, usually varies with engine power, acceleration or deceleration, compressor air bleed, and accessory power extraction.

(ii) Procedure. The official flight test plan should include requirements to investigate the engine operating characteristics for stall, surge, flameout, acceleration and deceleration response, and transient response (within approved limits) throughout the operating range of the rotorcraft. This should include maximum airspeed-sideslip combinations, power recoveries, hover with wind from all azimuths and other maneuvers appropriate to the type. Recirculation of exhaust gases during hover can be

critical for engine operation. Particular attention should be given to flight/operating conditions which can be judged critical from review of data on engine inlet pressure and temperature distribution patterns and engine stall margin data if available. High altitude has typically been critical for these tests and rearward flight at high altitude has resulted in unacceptable thermal distortions in the inlet due to reingestion. Stall, surge, or flameout which may be hazardous is unacceptable; i.e., causes loss of engine function, loss of control, severe torsional shock through the rotor drive system, or otherwise damages the rotorcraft.

(2) Vibration.

(i) Explanation. Engine airflow patterns are deflected or distorted by the presence of airframe inlet hardware, cowling, fuselage panels, and, to a degree, in almost all flight regimes. Additional items such as airframe installed particle separators, deflectors for snow, ice, or sand protection, and obstructions forward of the engine inlet, such as a hoist kit, could affect the engine air flow patterns. The rotating elements of the engine, particularly the compressor blades, will be subjected to a cyclically varying air flow as these elements move into and out of areas of deflected airflow to the engine. A corresponding aerodynamic load will be imposed on these engine elements. Since this loading is also cyclic, the possibility of critical frequency coupling with an engine component shall be investigated.

(ii) Procedure. Typically, this evaluation would involve installation in the engine inlet of a special multiple probe, total pressure sensing system, and flight testing which largely follows that prescribed for evaluation of engine operating characteristics as described above. Data from these tests can be reduced to create a pressure map at the compressor inlet face which, in conjunction with compressor speeds, may be used to determine the frequencies and relative amplitudes of the cyclic air loading imposed on the engine compressor blades. The engine manufacturer either supplies the sensing probe or specifies its design and performance. Also, the engine manufacturer may evaluate the test results or publish acceptance criteria. A wave analysis may be involved in identifying higher order excitations. Engine exhaust ducts which include bends, noise suppressors, or other obstructions may require an evaluation similar to that discussed above for the engine inlet. The engine manufacturer should be consulted for instructions or approval of this aspect. High performance engines may also require an engine inlet temperature survey. Details of instrumentation and acceptance criteria should be provided by the engine manufacturer. Engines equipped with only centrifugal compressors are less likely to encounter frequency coupling and may not require this investigation. The engine manufacturer's recommendations should be followed in these cases.

(3) Torsional Stability.

(i) Explanation. Governor-controlled engines installed in rotorcraft are subject to a fuel control resonant feedback condition which could be divergent if not properly designed or compensated. This condition occurs when the response

frequency of the governor on the engine is coincident with or close to a low order natural torsional frequency of the rotorcraft rotor drive system. Typically, these frequencies appear in the 3 to 5 CPS range. The manufacturer usually resolves torsional instability problems by introducing damping into the engine governor/fuel control. Provisions for this change must be supplied by or approved by the engine manufacturer. The final configuration may be a compromise between a lightly damped control, which will allow a positive but slow convergence of drive system torsional oscillations, and a highly damped control which exhibits excessive rotor speed droop or overspeed following rotorcraft collective control displacement.

(ii) Procedure. A ground and flight test program should be devised to evaluate the torsional response of the engine and drive system combination presented by the applicant. Instrumentation to record drive system torsionals should be applied to all major branches of the drive system. Engine parameters such as torque and power turbine speed should be recorded simultaneously with drive system parameters. The test program should include ground tie-down operation and flight operation across a range of engine power and rotor speeds while injecting control inputs as close to the first order drive system natural frequency as possible. Mechanical methods of making these inputs are not usually necessary if the desired frequency is in the 3 to 5 CPS range and the instrumentation readout confirms that the drive system was actually excited torsionally at its natural frequency. Control inputs should include collective, antitorque, and throttle. Also, cyclic inputs may be important on tandem rotor rotorcraft. The acceptance criteria may be dependent on several items. Among these are rotor and drive system fatigue loading, engine power response characteristics, limitations established by the engine manufacturer, etc. The acceptance criteria are usually stated as a percent damping (minimum). Typically, 1 percent of critical equivalent viscous damping (or greater) is acceptable. In effect, this means that the free vibration response to a control input damps to ½ amplitude in 11 cycles or less.

SUBPART E - POWERPLANT

FUEL SYSTEM

AC 27.951. § 27.951 (through Amendment 27-9) FUEL SYSTEM--GENERAL.

a. Explanation.

(1) The term “fuel system” means a system which includes all components required to deliver fuel to the engine(s). This includes, but is not limited to, all components provided to contain, convey, drain, filter, shutoff, pump, jettison, meter, and distribute fuel to the engines.

(2) Paragraph (a) of this section is a general statement of the performance requirements for fuel systems and constitutes authority to require the fuel system to be adequate notwithstanding compliance with detail requirements listed in §§ 27.953 through 27.999 of this subpart.

(3) Paragraph (b) of this section requires fuel systems to be designed so that air will not enter the system under any operating conditions by either arranging the system so that no fuel pump can draw fuel from more than one tank or by other acceptable means.

(4) Paragraph (c) of this section sets forth a fuel system performance requirement intended to ensure that ice to be expected in fuel when operating in cold weather will not prevent the fuel system from supplying adequate fuel to the engines. Although fuel system filters and strainers are the items in the fuel system most susceptible to clogging from ice particles in the fuel, this paragraph requires that the entire fuel system be shown to be capable of delivering fuel, initially contaminated with water and cooled to critical icing conditions, to the engine(s).

b. Procedures.

(1) For paragraph (a), the applicant should show compliance with the fuel system requirements of this subpart, except that if unusual fuel system arrangements or requirements exist which are not adequately addressed by these subparts, this paragraph may be used as authority to require special tests, analysis, or system performance needed for proper engine functioning.

(2) For paragraph (b), review the fuel system design with special attention to fuel tank selector valves, crossfeed systems, and multiple tank outlet arrangements to ensure that no fuel system configuration will allow air to enter the system. For questionable situations, the applicant should conduct ground tests and flight tests as necessary to verify compliance with this section.

(3) Paragraph (c) provides for sustained satisfactory operation of the fuel system, with initially ice-contaminated fuel. Since ice in the fuel system is not considered to be an emergency condition, but rather is an expected service encounter, compliance would not involve the imposition of special rotorcraft limitations. Flight manual instructions such as land as soon as practicable, reduce altitude to some value less than otherwise permitted, reduce power, turn on boost pumps, etc., are not appropriate in demonstrating compliance. Some methods of fuel system ice protection which have been used to show compliance follow.

(i) Fuel heater. Usually these devices are fuel-to-engine oil heat exchangers and are normally located to protect the fuel filter from blockage by ice in the fuel. The adequacy of these devices should be established. Usually this involves generation of a heat balance between heat gained by fuel and heat lost by oil using performance data provided by the manufacturers of the fuel-oil heater, the oil cooler, the heat rejected by the engine to the oil, etc. A minimum oil temperature associated with the adequacy of the fuel heater may need to be established, marked on the oil temperature gauge, and verified to be maintained during critical flight conditions. Other unprotected parts of the fuel system remain to be evaluated and substantiated for compliance with this requirement.

(ii) Oversized fuel filter. This method may only substantiate the fuel filter and, as with the fuel heater method, is incomplete without evaluation of the remainder of the fuel system. An icing test of the filter should be accomplished. Fuel preparation procedures and method of testing should follow the applicable portion of SAE Aerospace Recommended Practice (ARP) No. 1401. A satisfactory configuration is achieved when a filter is demonstrated to have the capacity to continue to provide the filtration function, without bypassing, when subjected to fuel contaminated by ice to the degree required by this rule. Usually, a delta pressure caution signal for the filter is needed to alert the flight crew that progressive filter blockage is in progress. The caution device setting should be established by test which demonstrates that after illumination of the caution signal sufficient filter capacity exists to enable completion of the flight. Fuel pressure should not fall below established limits because of ice accumulation on the filter.

(iii) Anti-ice additives. This method utilizes the properties of ethylene glycol to reduce the freezing temperature of water in the fuel. It has the advantage over other methods of protecting all components in the fuel system from ice blockage. Compliance with the rule by this method involves the following.

(A) Eligible additives. PFA-55MB (Phillips Petroleum Co.) and additives per specification MIL-I-27868, Revision D, or earlier. Later versions of this specification do not require glycerin, which may be needed to protect fuel tank coatings.

(B) Compatibility. Both engine fuel system and aircraft fuel system should be verified to be chemically compatible with the additive at the maximum concentration to be expected in the fuel system. Usually, information on eligible system materials can

be obtained from the engine manufacturer for the engine fuel system and from the additive manufacturer for aircraft fuel system materials.

(C) Adding or blending the additive to the fuel. These additives do not mix well with the fuel and indiscriminate dumping of additive into the tank will not only fail to protect the system from ice accumulation but likely will damage nonmetallic components in the system. Some fuels may have additive premixed in the fuel. If other fuels are to be eligible, a method for blending additive into the fuel during refueling must be devised and demonstrated to be effective.

(D) Placards should be added near the fuel filler opening to note that fuel must contain the anti-ice additive PFA-55MB MIL-I-27686 within the minimum and maximum allowed concentration.

(E) The FAA/AUTHORITY-approved flight manual should contain necessary information to attain satisfactory blending of the additive and procedures to allow the operator to check the blend in the fuel tank.

(iv) Fuel system protection (other than filters). If the fuel heater method or oversize filter method (paragraphs AC 27.951b(3)(i) and b(3)(ii)) is proposed, the remainder of the fuel system should be shown to be free from obstruction by fuel ice. This may be shown by testing the system with ice-contaminated fuel (prepared as suggested for filter tests) or, in many cases, by selecting fuel system components which by test or by previous experience are known to be free of ice collection tendencies. Tank outlet screens (or tank-mounted pump inlet screens) may be the significant fuel system feature for further evaluation. In some instances, fuel turbulence due to pump motions may be sufficient to keep the screen clear of ice. In other instances, small screen bypass openings (approximately one-fourth inch in diameter) located outside the predominant fuel flow path have been found satisfactory.

NOTE: Advisory Circular (AC) 20-29 contains information regarding compliance with the fuel ice protection requirements of Part 25, § 25.997(b). The information in this AC is largely valid except for references to the quantity of water to be expected in fuel and the amount of additive required to ensure freedom from fuel ice hazards.

AC 27.952. § 27.952 (Amendment 27-30) FUEL SYSTEM CRASH RESISTANCE.

a. Explanation.

(1) Section 27.952 (added by Amendment 27-30) provides safety standards that minimize postcrash fire (PCF) in a survivable impact. The rule contains comprehensive crash resistant fuel system (CRFS) design and test criteria that significantly minimize fuel leaks, creation of potential ignition sources, and the occurrence of PCF. Section 27.952 accomplishes this for survivable impacts by:

(i) Providing comprehensive criteria to minimize fuel leaks and potential ignition sources;

(ii) Requiring increased crash load factors for fuel cells in and behind occupied areas to ensure the static, ultimate strength necessary for impact energy absorption, structural integrity, fuel containment, and occupant safety;

(iii) Maintaining the load factors of § 27.561 for fuel cells in other areas (particularly underfloor cells) to ensure leak-tight fuel cell deformation in energy absorbing underfloor structure without unduly crushing or penetrating the occupiable volume; and

(iv) Requiring a 50 ft. dynamic vertical impact (drop) test to measure fuel tank structural and fuel containment integrity.

(2) Section 27.952 applies to all fuel systems (including auxiliary propulsion unit (APU) systems).

(3) Some similarities exist among the fire protection requirements of §§ 27.863, 27.1337(a)(2), and 27.952. The requirements in each standard are not mutually exclusive. Overlapping requirements should be certified simultaneously.

(4) The use of bladders is not mandated as this would unduly dictate design. However, in the majority of cases, their use is necessary to meet the test requirements of § 27.952. If a design does not use bladders, the application should be treated as a new and unusual design feature and should be thoroughly coordinated with the Airworthiness Authority for Technical Policy to insure adequate safety. Experience has shown that bladders with wall thicknesses from 0.03 to 0.018 inches typically meet the § 27.952 test requirements.

b. Related Material. Documents shown below may be obtained from The Naval Publications and Forms Center, 5801 Tabor Avenue, Philadelphia, Pennsylvania 19120-5094, ATTN: Customer Service (NPODS).

(1) ~~Military Specification, MIL-T-27422B, Amendment 1, April 13, 1971, Tank, Fuel, Crash-resistant Aircraft~~. (canceled 6-7-97 without replacement)

(2) Military Standard, MIL-STD-1290 (AV), January 25, 1974, Light Fixed and Rotary Wing Aircraft Crashworthiness.

(3) Military Standard, MIL-H-83796, August 1, 1974, Hose Assembly, Rubber, Lightweight, Medium Pressure, General Specification for.

(4) Military Specification, MIL-V-27393 (USAF), July 12, 1960, Valve, Safety, Fuel Cell Fitting, Crash Resistant, General Specification for.

(5) Military Specification, MIL-H-25579 (USAF).

(6) Military Specification, MIL-H-38360.

(7) U.S. Army Publication USARTL-TR-79-22E, “Aircraft Crash Survival Design Guide, Volume V---Aircraft Postcrash Survival”, dated January 1989.

NOTE: Section 4, “Postcrash Fire Protection” of Volume V of the Design Guide is the modern update to MIL-STD-1290. Section 4 contains a comprehensive design guide for military CRFS designs that may be useful for civil CRFS designs.

c. Conceptual Definitions.

(1) Survivable Impact. An impact (crash) where human tolerance acceleration limits are not exceeded in any of the principal rotorcraft axes, where the structure and structural volume surrounding occupants are sufficiently intact during and after impact to constitute a livable volume and permit survival, and where an item of mass does not become unrestrained and create an occupant hazard. “Livable volume” relates to the ability of an airframe to maintain a protective shell around occupants during a crash and to minimize threats, such as accelerations, applied to the occupiable portion of the aircraft during otherwise survivable impacts. In lieu of a more rational, approved criteria, the load factors of § 27.952(b)(1) constitute the structural human survivability accelerations limits.

(2) Postcrash Fire (PCF). A fire occurring immediately after and as a direct result of an impact. The fire is either the result of fuel released from a leaking fuel system reaching an existing or a crash-induced ignition source, a crash-induced ignition source internal to an undamaged or damaged fuel system, or a combination. PCF's have an intensity range from the minimum of a small local flame to the maximum of an instantaneous massive fire or fireball (explosion).

(3) Fuel Tank or Cell. A reservoir that contains fuel and may consist of a hard shell (of a composite, metal, or hybrid construction) with either a laced-in, snapped in, or otherwise attached semirigid or flexible rubber matrix bladder (or liner), spray-on bladder, or no bladder. The hard shell may be either the airframe (integral tank) or a separate rigid tank attached to the airframe. The device has inlets and outlets for fuel transfer and internal pressure control.

(4) Ignition Source. An ignition source that when wet with fuel or in contact with fuel vapor would cause a PCF.

(5) Major Fuel System Component. A fuel system part with enough mass, installation location hazard or a combination to be structurally considered in a crash. Structural consideration is required when crash-induced relative motion can occur between the part and its surrounding structure from inertial impact forces, airframe deformation forces, or for other reasons.

(6) Drip Fence. A physical barrier that interrupts liquid flow on the underside of a surface, such as a fuel cell, and allows it to drip nonhazardously to an external drain.

(7) Flow Diverter. A physical barrier that interrupts or diverts the flow of a liquid.

(8) Frangible Attachment or Fitting. An attachment or fitting containing a part that is designed and constructed to fail at a predetermined location and load.

(9) Deformable Attachment or Fitting. An attachment or fitting containing a part that is designed and constructed to deform at a predetermined location and load to a predetermined final configuration.

(10) Self-Sealing Breakaway Fuel Fitting. A fuel-carrying in-line, line-to-firewall, bulkhead or line-to-tank connection that breaks in half and self-seals when subjected to forces greater than or equal to the unit's design breakaway force. Each half self-seals using a spring-loaded valve (e.g., trap door or equivalent means) that is normally open but is released and closed upon fitting separation. Fitting breakaway force is typically controlled by a frangible metal ring (or series of circumferential tabs) that connects the two fitting halves. Normal, fuel-tight integrity is maintained by "O" rings held under pressure by the rigid, frangible connecting ring (or tabs). When broken open, a small amount of fuel (usually less than 8 ounces) is released. This is the fuel trapped in the coupling space between the two spring-loaded valves. Once failed each coupling half may leak slightly. Typically, this leak rate should be less than 5 drops per minute per coupling half.

(11) Crash Resistant Flexible Fuel Cell Bladder. Flexible, rubberized material, usually with fibers (i.e., rubber "resin" and natural or synthetic fiber) in both the 0° (warp) and 90° (fill) directions that is used as a liner in a rigid shell or integral tank. The material acts as a membrane because, when unsupported, it can only carry pure tension loads. Therefore, it must be uniformly supported by rigid structure (reference § 27.967) so that the liner carries only compressive fluid loads and the surrounding shell structure carries the fluid-induced shear, tension, and bending loads transmitted through the liner or bladder. The material is usually secured (e.g., laced, snapped, etc.) into its surrounding structure at key locations to maintain its intended conformal shape. In many designs, lightweight spacers, such as structural foam, are used between the liner and the airframe to maintain the liners intended conformal shape and to transmit fluid loads to the airframe. The material is either qualified under TSO-C80, "Flexible Fuel and Oil Cell Material," or qualified during certification. Sections 27.952 and 27.963(g) have increased the minimum puncture resistance qualification requirement for liner material (see TSO-C80, paragraph 16.0) from 15 to 370 pounds.

(12) Crash Resistant Fuel System (CRFS). A fuel system designed and approved in accordance with § 27.952 that either prevents a PCF or delays the start of a severe PCF long enough to allow escape.

(13) As Far as Practicable. "As Far as Practicable" means that within the major constraints of the applicant's design (e.g., aerodynamic shape, space, volume, major structural relocation, etc.), this standard's criteria should be met. The level of practicability is much higher in a new design project than in a modification project. The engineering decisions, evaluations, and trade studies that determine the maximum level of practicability should be documented and approved.

(14) Fireproof. Defined in § 1.1, "General Definitions" and in AC 20-135, "Powerplant Installation and Propulsion System Component Fire Protection Test Methods, Standards and Criteria" dated February 6, 1990.

d. Procedures.

(1) Section 27.952 should be applied to all fuel system installations. Any major design change should be reevaluated for compliance with the CRFS requirements. It should be noted that most standard materials and processes are acceptable for crash resistant fuel system construction; however, magnesium, magnesium alloys, and cadmium plated parts (when exposed to fuel) are not recommended, because of their inherent ability to create or contribute to a post crash fire. Section 27.952(a) requires each tank, or the most critical tank (if clearly identified by rational analysis) to be drop tested. The tank is filled 80 percent with water and the remaining 20 percent is filled with air (or, in the case of a flexible fuel cell, the air may be evacuated by hand and the cell resealed). The tank openings, except for the vents, are closed with plugs (or other suitable means) so that they remain watertight. The vents are left open to simulate natural venting. Otherwise, the tank is flight configured. The test tanks are installed in their surrounding structure and dropped from a height of 50 feet on a nondeformable surface (e.g., concrete or equivalent). To be considered a valid test, the tank must impact horizontally ±10°. The 50-foot distance is measured between the nondeformable surface and the bottom of the tank. The ±10° attitude requirement can be ensured by using lightweight cord or a light sling to balance the tank assembly horizontally prior to being dropped. MIL-T-27422B shows a typical test setup. Tank attitude at impact should be verified by photography or equivalent means. The nondeformable floor surface should be covered by a thin plastic sheet so that any leakage is readily detected. The tank water should be tinted with dye to make leakage and seepage sources easy to identify. The tank (except for the vent openings) should be wrapped in light plastic sheet to ensure that minor leakage or seepage (and its source) is detected. Minor spillage through the open vents during the drop test is allowed. The dye should not significantly affect the water's viscosity or other physical properties that may reduce or eliminate any leakage from the drop test. The nondeforming drop test surface should be carefully reviewed. Concrete is acceptable. A fixed and uniformly supported steel plate (loaded only in uniform compression without any springback) is acceptable. Floors or floor coverings such as dirt, clay, wood, or sand are not acceptable. Selection

of the critical fuel tank is important. Factors such as size, fuel cell design and construction, and material(s) should be accounted for when selecting the critical tank. The applicant may elect to drop only a bare fuel cell, not a surrounding structural airframe segment with a fuel cell installed. If so, the applicant must show that puncture hazards to the fuel cell have been eliminated.

(i) If the applicant elects to perform the drop test with surrounding aircraft structure, the cell should be enclosed in enough surrounding structure (production or simulated) so that the airframe/fuel tank interaction during the 50-foot drop is realistically evaluated. This allows the fuel-tight integrity of the “as installed” fuel cell to be evaluated and may provide protection in some designs due to the energy absorption of the surrounding airframe when crushed by impact. This provides realistic testing of fuel cell rupture points caused by installation design features, projections, excessive deformation and local tearout of fittings, joints, or lacings. The amount of actual (or simulated) structure included in the test requires engineering evaluation, risk assessment, and detailed analysis and may require subassembly (e.g., joint) tests for proper determination. Typically, the structure surrounding and extending 1 foot forward and aft of the fuel cell is adequate. This structure has a high probability of causing crash-induced fuel cell leakage. Each application should be examined individually to include all potential structural hazards. If the surrounding structure is clearly shown not to be a contributing hazard for the drop test, and if the applicant elects to do so, the fuel cell may be conservatively dropped alone. This determination should be carefully made by a detailed engineering evaluation. The evaluation should use standard, finite element-based programs (e.g., ‘KRASH”, NASTRAN, etc.) or similar programs submitted during certification, subassembly or component tests. Elimination of the surrounding structure for the drop test configuration is not trivial. If elimination is applied for, the data should clearly and conclusively show that the surrounding structure is not an impact hazard. In any case, the drop height is a constant 50 feet. The work that determines the test article configuration should be summarized, documented, and approved.

(ii) If the drop test is used to show partial compliance with the underfloor fuel cell load factors of § 27.952(b)(3), test plans should be approved. Minor spillage from the open vents is allowed. Full compliance to these load factors should be shown by static analysis and/or tests. The intent is to provide a fuel cell that is fuel tight and does not unduly crush the occupiable volume or overly stiffen energy absorbing underfloor structure under vertical impact.

(iii) Immediately after the drop test, the tank should be placed in the same axial orientation from which it was dropped and visually examined for leakage. Minor spillage from the open vents is allowed. After 15 minutes, the tank should be reexamined and any new leakage or seepage sources noted and recorded. Any evidence of fluid on the plastic floor cover or tank wrapping sheet should be noted and recorded. Any fluid leakage or seepage constitutes a test failure. This procedure should be repeated immediately with the tank inverted and the vents plugged. The inversion procedure will identify any leak sources on the upper surfaces.

(2) Section 27.952(b) provides three sets of static load factors for design and static analysis of fuel tanks, other fuel system components of significant mass and their installations. “Installation” is structurally defined as the fuel cell’s attachment to the airframe and any additional local (point design) airframe structure affected significantly by fuel cell crash loads (i.e., that would fail or deform to the extent that a fuel spill or a ballistic hazard would occur in a survivable impact). Section 27.952(d) significantly limits the amount of local airframe structure to be considered. The provision of load factors by zone ensures the fuel-tight integrity necessary to minimize PCF in a survivable impact. Unless explicitly shown by both analysis and test that the probability of fuel leakage in a survivable impact is 1×10^{-9} or less, each tank and its installation must be designed and analyzed to one set of these load factors. Also, as stated and explained in the advisory material for § 27.561, the load factors specified by § 27.561(d) are for the airframe structure surrounding the fuel cell only. The fuel cells themselves (and any fuel system components of significant mass in the underfloor area) and their attachments to the surrounding airframe structure are subject to the load factors of § 27.952(b)(3).

(i) Section 27.952(b)(1) provides load factors for the design and static analysis of fuel cells and their attachments inside the cabin volume. These load factors are provided to prevent crash-induced fuel cell ballistics hazards to and fuel spills (that may cause a PCF) directly on occupants from local structural failures in a survivable impact.

(ii) Section 27.952(b)(2) provides load factors for design and static analysis of fuel cells and their attachments located above or behind the cabin volume. These load factors are provided to prevent injury or death from a fuel cell behind or above the occupied volume that is loosened by impact and to prevent fuel spills (which may cause a PCF) in a survivable impact.

(iii) Section 27.952(b)(3) provides load factors identical to those of § 27.561 for design and static analysis of fuel cells and attachments located in areas other than inside, behind, or above the cabin volume. Since many fuel cells are located under the cabin floor, these load factors provide fuel-tight structural protection in a survivable impact.

(iv) For some crash resistant semi-rigid bladder and flexible liner fuel cell installations, the 50-foot drop test (reference § 27.952(a)) can (with some additional rational analysis) simultaneously satisfy both the drop test requirement and the vertical down load factor ($-N_Z$) requirement of § 27.952(b)(3) for the fuel cell itself and its installation. This approach reduces the certification burden.

(v) For applicants that seek to substantiate the $-N_Z$ load factor requirement of § 27.952(b)(3) using the 50-foot drop test, additional substantiation is required for § 27.952(b)(3) (as is currently practiced) for the fuel cell under the loading of the remaining three load factors and the remaining rotorcraft structure under the

loading of all four load factors. In some cases substantiation of the remaining three load factors can be further simplified by a successful drop test if the fuel cell is symmetric (i.e., structurally equivalent in all four directions).

(3) Section 27.952(c) requires self-sealing breakaway fuel fittings at all fuel tank-to-line connections, tank-to-tank interconnects, and other points (e.g., fuel lines penetrating firewalls or bulkheads) where a reasonable probability (as determined by engineering evaluation, service history, analysis, test or a combination) of impact-induced hazardous relative motion exists that may cause fuel leakage to an ignition source and create a PCF during a survivable impact. In some coupling installations (such as fuel line-to-fuel tank connections), the tank coupling half should be sufficiently recessed into the tank or otherwise protected so that hazardous relative motion (of the fuel cell relative to its surroundings) following an impact-induced coupling failure does not cause a tearout or deformation of the tank half of the separated coupling that would release fuel. The only exceptions are either-

(i) Installations that use equivalent devices such as extensible lines (hoses with enough slack or stretch to absorb relative motion without leakage) or motion absorbing fittings (rotational or linearly extensible joints); or

(ii) Installations that conclusively show by a combination of experience, tests, and analysis to have a probability of fuel loss to an ignition source in a survivable crash of 1×10^{-9} or less.

(4) Section 27.952(c)(1) specifies the basic design features required for self-sealing breakaway couplings.

(5) Section 27.952(c)(1)(i) defines the design load (strength) conditions necessary to separate a breakaway coupling. These loads should be determined from analysis and/or test, reference paragraph d(6). The minimum ultimate failure load (strength) is the load that fails the weakest component in a fluid-carrying line based on that component's ultimate strength. This load comes from local deformation between the coupling and its surrounding structure during a worst-case survivable impact. A failure test of three specimens of the weakest component in each line that contains a coupling should be conducted in the critical loading mode. (If a single critical loading mode cannot be clearly identified, each of the three most critical loading modes should be tested.) The three specimen test results should be averaged. The average value is then used to size the breakaway fuel coupling. [For standard specification (i.e., "off the shelf") hardware, equivalent testing may have already been accomplished and, if no other mitigating circumstances in the design and installation exist, need not be repeated.] To assure separation of the coupling prior to full line failure and to prevent inadvertent actuation, the design load that separates the coupling should be between 25 and 50 percent of the minimum ultimate failure load (strength) of the line's weakest component. The critical loads should be compared to the normal service loads calculated and measured at the coupling location to insure unintended service failures do not occur. Typically this criterion is readily satisfied by the natural design because

working loads are much less than crash-induced loads. A separation load less than 300 pounds should not be used regardless of the line size. The minimum 300-pound load is necessary to prevent ground maintenance failures. A fatigue analysis and/or test (reference paragraph d(10)) should be performed to ensure the installation is either a safe-life design or has a conservative, mandatory replacement time. The simplified method of paragraph e(2)(i) of AC 27 MG-11 may normally be used because of the low ratio of working load-to-crash-induced failure load. However, since fatigue failures have occurred in service, all fatigue sources (especially high-cycle vibratory sources) should be evaluated. Fracture critical materials should be avoided, and damage tolerant materials utilized. Also, if airframe deformation due to flight loads is significant, its effect on the couplings should be checked to ensure that static or low-cycle fatigue failures do not occur prior to the part's intended retirement life. Large flight load deformations are not usually present in rotorcraft.

(6) Section 27.952(c)(1)(ii) requires a self-sealing breakaway coupling to separate when the minimum breakaway load (reference paragraph AC 27.952d(5) and § 27.952(c)(1)(i)) is met or exceeded in a survivable impact. The loading modes (each of which produces a breakaway load) are determined by analyzing and/or testing the surrounding structure to determine the probable impact forces and directions. The modes usually occurring are tension, bending, shear, compression, or a combination (figure AC 27.952-1). The coupling should be designed and tested to separate at the lowest ultimate impact load (lowest critical mode) as long as the minimum working load criterion of § 27.952(c)(1)(i) is also satisfied. Each breakaway coupling design should be tested in accordance with the following (reference MIL-STD-1290) or equivalent procedures. It should be noted that the ratio of the ultimate failure load of the weakest component in the fuel line and the normal service load (i.e., the peak load or approved clipped peak load experienced during a typical flight) of that component should be as high as possible and still meet the other load criteria of this section. Typically, this ratio should not be less than 5.

(i) Static Tests. Each breakaway coupling design should be subjected to tension and shear loads to verify and establish the design load required for separation, nature of separation, leakage during valve actuation, general valve functioning, and leakage following valve actuation. The rate of load application should not be greater than 20 inches per minute. Tests to be used where applicable are shown in figure AC 27.952-1.

(ii) Dynamic Tests. Each breakaway coupling design should be proof-tested under dynamic loading conditions. The couplings should be tested in the three most likely anticipated modes of separation as defined in paragraph d(5). The test configurations should be similar to those shown in figure AC 27.952-1. The load should be applied in less than 0.005 second, and the velocity change experienced by the loading jig should be 36 ±3 feet per second.

(7) Section 27.952(c)(1)(iii) requires that breakaway couplings be visually inspectable to determine that the coupling is locked together (fuel-tight) and remains

open during normal operations. Visual means (such as, an axial misalignment between the two coupling halves, a designed-in visual indicator, a combination or other acceptable criteria) should be considered and specified in the maintenance manual rejection criteria for operational inspections. Inspectability and phased inspection requirements should be evaluated. Special inspections after severe maneuvers or hard landings should be required.

(8) Section 27.952(c)(1)(iv) requires breakaway couplings to have design provisions that prevent uncoupling or unintended closing by operational shocks, vibrations, or accelerations. These provisions depend on both the coupling's design and installation location. The structural environment should be defined, analyzed, and compared with coupling specifications and certification data so that inadvertent decoupling or closing does not occur. A phased inspection requirement should be considered.

(9) Section 27.952(c)(1)(v) requires a coupling design to not release more than its entrapped fuel quantity when the coupling has separated and each end is sealed off. The entrapped fuel is determined by the coupling design and is essentially the fuel trapped between the seals when separation occurs (see breakaway coupling definition). This is usually less than 8 ounces of fuel per coupling. Most coupling designs will leak slightly after separation. This is acceptable but the leak rate should be 5 drops per minute, or less, per coupling half. Specifications defining the entrapped volume of fuel should be approved. If the coupling is not approved or manufactured to an acceptable military or civil specification, the qualification testing of d(6) should be conducted.

(10) Section 27.952(c)(2) requires that each breakaway coupling or equivalent device either in a single fuel feed line or a complex fuel feed system (e.g. a multiple feed line or multitank cross feed system) be designed, tested, installed, inspected, maintained, or a combination, so that the probability of inadvertent fuel shutoff in flight is 1×10^{-5}, or less, as required by § 27.955(a). This should be determined by reliability and failure analysis, other analysis, tests, or a combination and should be documented and approved. Continued airworthiness should be ensured by phased inspections, specific component replacement schedules, or a combination. This section also requires each coupling or equivalent device to meet the fatigue requirements of § 27.571 to prevent leakage. (See the fatigue discussion in paragraph d(5).) The typical method of compliance with § 27.571 used for rotor system parts may not be necessary to meet § 27.952(c)(2). An S-N curve may not need to be generated using full-scale specimen fatigue tests if the conservative method of paragraph e(2)(i) of AC 27 MG 11, "Fatigue Evaluation of Rotorcraft Structure" can be applied successfully.

(11) Section 27.952(c)(3) requires that an equivalent device, used instead of a breakaway coupling, not produce a load, during or after a survivable impact, on the fuel line to which it attaches greater than 25-50 percent of the ultimate load (strength) of the line's weakest component. This minimizes crash-induced fuel spills that may cause a PCF. The ultimate strength of the weakest component should be determined by analysis and/or tests. At least three specimens of the component should be tested to

failure in the critical loading mode and the results averaged. [For standard specification (i.e., “off the shelf”) hardware, equivalent testing may have already been accomplished and, if no other mitigating circumstances in the design and installation exist, need not be repeated.] The average value is then used to size the equivalent device. Each equivalent device must meet the fatigue requirements of § 27.571 to prevent fatigue-induced leakage. Equivalent devices should be statically and dynamically tested in an identical manner (where feasible) to breakaway couplings (reference paragraph d(6)). All fuel hoses and hose assemblies (whether or not they are used in lieu of breakaway fittings) should meet the following (reference MIL-STD-1290) or equivalent requirements. Any stretchable hoses used as equivalent devices should be able to elongate a minimum of 20 percent without leaking fuel. All other hoses used as equivalent devices should have a minimum of 20-30 percent slack. It should be noted that the ratio of the ultimate failure load of the weakest component in the fuel line and the normal service load (i.e., the peak or approved clipped peak load experienced during a typical flight) of that component should be as high as possible and still meet the other load criteria of this section. Typically, this ratio should not be less than 5.

(i) All hose assemblies should meet or exceed the cut resistance, tensile strength, and hose-fitting pullout strength criteria of MIL-H-25579 (USAF), MIL-H-38360, or equivalent standards.

(ii) Hoses should neither pull out of their end fittings nor should the end fittings break at less than the minimum loads shown in figure AC 27.952-3 when the assemblies are tested as described in d(11)(iii) below. In addition to the strength requirements, the hose assemblies should be capable of elongating to a minimum of 20 to 30 percent by stretch, slack, or a combination without fluid spillage.

(iii) Hose assemblies should be subjected to pure tension loads and to loads applied at a 90° angle to the longitudinal axis of the end fitting, as shown in figure AC 27.952-2. Loads should be applied at a constant rate not exceeding 20 inches per minute.

(12) Section 27.952(d) requires frangible or deformable structural attachments to be used to install fuel tanks and other major system components to each other and to the airframe when crash-induced hazardous relative motion could cause local rupture and tearout of the component, spill fuel to an ignition source, and create a PCF. If it can be conclusively determined that the probability of fuel spillage is 1×10^{-9} or less, no further action is required. Typically, frangible designs are much easier to certify than deformable designs because the scatter in failure loads is much less. Also, some standard frangible military hardware (e.g., frangible bolts) is readily available. This is not so for deformable designs. Each frangible or deformable structural attachment and its installation should be reviewed to insure that, after an impact failure (i.e., separation or deformation), it does not become a puncture or tear-out hazard and cause fuel spillage.

(13) Section 27.952(d)(1) defines the impact design load conditions necessary to deform a deformable attachment or to separate a frangible attachment. These loads should be determined from analysis and/or test (reference paragraph d(14)), and verified during certification. All impact loading modes (tension, bending, compression, shear, and a combination) should be analyzed and the minimum critical frangible or deformable design load determined, based on the ultimate strength of the attachment's weakest component. The critical load should be compared to the normal service loads calculated and measured at the attachment's location to insure unintended service failures do not occur. (Normally, this criterion is readily satisfied because working loads are much less than impact loads.) A fatigue check should be conducted to ensure that the attachments meet the requirements of § 27.571. Typically, this can be accomplished using the simplified method of AC 27 MG 11, paragraph e(2)(i),because of the low ratio of working-load-to-crash-induced failure load. However, because of service history, all fatigue sources (especially high cycle vibratory sources) should be reviewed. The standard method of compliance with § 27.571 used for rotor system parts may not be necessary to meet § 27.952(d)(3). An S-N curve may not need to be generated using full-scale specimen fatigue tests, if the conservative method of AC 27 MG 11, paragraph e(2)(i),can be applied successfully. Fracture critical materials should be avoided and ductile, damage tolerant materials utilized. Phased inspections to ensure continued airworthiness should be considered. Special inspections after severe maneuvers or hard landings should be required. A breakaway or deformation load less than 300 pounds (based on maintenance considerations) is not permitted. If airframe deformation due to flight loads is significant, its effect should be checked to ensure that a static failure or low cycle fatigue failure does not occur. Large flight load deflections are not usually present in rotorcraft.

(14) Section 27.952(d)(2) requires a frangible or locally deformable attachment to function when the minimum breakaway or deformation load (reference § 27.952(d)(1)) is met or exceeded in a survivable impact. The minimum breakaway or deformation load is the load that either breaks or deforms each of the frangible or deformable attachment(s) of each fuel cell, fuel line, or other critical fuel system component to the airframe. Each breakaway/deformation load must be between 25 percent to 50 percent of the load which would cause failure (i.e., impact induced tearout and subsequent fuel leakage) of the attachment to fuel cell, fuel line, or other critical component interface. This is necessary in some installations to prevent tearout of the structural attachment from the fuel cell component to which it is attached and the resultant fuel leakage in a survivable impact. The primary loading modes (each of which will produce a breakaway or deformation load) must all be considered to determine the minimum load. This is done by analyzing the surrounding structure (reference paragraph d(13)) to determine the three most probable impact failure forces and their directions. The attachment should then be tested to insure it breaks or deforms at the lowest ultimate crash (impact) load as long as the minimum working load criterion of § 27.952(d)(1) is also satisfied. It should be noted that the ratio of the ultimate failure load of the weakest component in the frangible or deformable component's load path and the normal service load (i.e., peak load or approved clipped peak load experienced during a typical flight) of that component should be as high as

possible and still meet the other load criteria of this section. Typically this ratio should not be less than 5. The following certification tests (reference MIL-STD-1290) or equivalent should be conducted on each frangible or deformable attachment design.

(i) Static Tests. Each frangible or deformable device should be tested in the three most likely anticipated modes of failure as defined in paragraph d(13). Test loads should be applied at a constant rate not exceeding 20 inches per minute until failure occurs.

(ii) Dynamic Tests. Each frangible or deformable attachment should be tested under dynamic loading conditions. The attachment should be tested in the three most likely failure modes as determined in paragraph d(13). The test load should be applied in less than 0.005 second, and the velocity change experienced by the loading jig should be 36 ±3 feet per second. It should be noted that the dynamic load pulse is a ramp function starting at either previously determined failure load in 0.005 seconds. The velocity change of the test jig 0 or some small test fixture preload and reaching the is also a ramp function starting at 0 and reaching a final velocity of 36±3 ft./sec. in 0.005 seconds. These ramps functions simulate the dynamic conditions of a survivable impact under which the frangible/deformable attachment must perform its intended function.

(15) Section 27.952(d)(3) requires a frangible or locally deformable attachment to meet the fatigue requirements of § 27.571 to eliminate premature fatigue failure. The simplified method of AC 27 MG 11 may be used. Because of service history, all fatigue sources (especially high cycle vibratory sources) should be reviewed. Fracture critical materials should be avoided and ductile, damage tolerant materials utilized.

(16) Section 27.952(e) requires that, as far as practicable, fuel and fuel containment devices be adequately separated from occupiable areas and potential ignition sources. Several generic categories of ignition sources and potential PCF-producing contact scenarios exist. The intent of the section is to define all possible leak and ignition sources that could be activated in a survivable impact and to provide design features to eliminate or minimize them such that the occurrence of PCF is minimized and escape time is maximized. Adequate separation should be accomplished by a thorough design review, potential PCF hazard analysis, and detailed design trade studies. The resultant findings should be documented and approved. The following PCF hazards and any other such hazards should be documented, minimized by design to the maximum practicable extent, and their resolution documented and FAA/AUTHORITY approved. Conditions to be reviewed should include, but are not limited to, the following:

(i) High temperature ignition sources.

(A) Tank fillers or overboard fuel drains should not be located adjacent to engine intakes or exhausts so that fuel vapors could be ingested and ignited.

(B) Fuel lines should not be located in any occupiable area unless they are shrouded or otherwise designed to prevent spillage and subsequent ignition during and immediately following a survivable impact.

(C) Fuel tanks should not be located in or immediately adjacent to engine compartments, engine induction or exhaust areas, heaters, bleed air ducts, hot air-conditioning ducts, or any other hot surface.

(D) Fuel lines should be kept to a minimum in the engine compartment. Fluid lines should not be located immediately adjacent to engine exhaust areas, heaters, bleed air ducts, hot air-conditioning ducts, or any other hot surface.

(E) Fuel lines should not be located where they can readily spill, spray, or mist onto hot surfaces or into engine induction or exhaust areas. These locations should be determined for each aircraft design by considering probable structural deformation hazards in relation to the fuel system.

(ii) Electrical ignition sources.

(A) Fuel tanks and lines should not be located in electrical compartments.

(B) Electrical components and wiring should be separated from fuel lines and vent openings and kept to a minimum in fuel areas.

(C) Electrical wiring should be hermetically sealed and equipment should be explosion-proofed in areas where they are immersed in or otherwise directly subjected to fuel and vapors and should meet § 27.1309 or should otherwise be protected such that ignition is extremely improbable.

(D) Electrical sensor lines that penetrate fuel tank walls should be protected from abrasion or guillotine cutting during a survivable impact by use of potting, rubber plugs or grommets, or other equivalent means and should be designed with sufficient local slack, or equivalent means, to prevent both the wires and their protective mountings from being cut by or torn from fuel tank walls by local deformation.

(E) Electrical wires should be designed with sufficient slack or equivalent means to accommodate structural deformation without creating an ignition source.

(F) Electrical wires that could be subjected to severe local abrasion, cutting, or other damage during a survivable impact should be protected locally by nonconductive shields or shrouds.

(G) Electrical wires that are not sufficiently separated from heat or ignition sources to avoid potential contact during a survivable impact should be locally shrouded with a nonconductive fireproof shroud.

(iii) Friction spark, chemical, and electrostatic ignition sources. Fuel lines and tanks should be designed and located to eliminate fuel or fuel vapor ignition from potential mechanical friction spark ignition sources, chemical ignition sources, and electrostatic ignition sources having a high probability of being activated or created during a survivable impact.

(iv) Separation of fuel tanks and occupiable areas. Fuel tanks should be located as far as practicable from all occupiable areas. This minimizes potential PCF sources in occupiable areas and the potential for occupant saturation with fuel on impact. The design should be reviewed to minimize these potential hazards. Fuel tanks should also be removed, as far as practicable, from other potentially hazardous areas such as engine compartments, electrical compartments, under heavy masses (e.g., transmissions, engines, etc.), over landing gear, and other probable areas of significant impact damage, including rollover and skidding damage.

(v) Fuel Line Shielding. Areas of the fuel line system where the probability of spilled fuel reaching potential ignition sources or occupiable areas is greater than extremely improbable should be shielded with drainable fireproof shrouds. Shrouds should be drainable to allow periodic inspections for internal fuel leaks. The design should be reviewed to ensure these criteria are met.

(vi) Flow Diverters and Drain Holes.

(A) Drainage holes should be located in all fuel tank compartments to prevent the accumulation of spilled fuel within the aircraft. Holes should be large enough to prevent clogging by typical debris and to prevent fluid accumulation from surface tension force blockage.

(B) Drip fences and drainage troughs should be used to prevent gravity-induced flow of spilled fuels from reaching any ignition sources such as hot engine areas, electrical compartments, or other potential hot spots. Drip fences and troughs are also necessary to prevent PCF by routing spilled fuel around ignition sources to drainage holes to minimize fuel accumulation inside the fuselage. Recurring inspection requirements to ensure holes and troughs remain airworthy should be identified. These criteria should be met, as far as practicable, for all postcrash attitudes. This is readily accomplished for the standard landing attitude, but is more difficult for other abnormal attitudes. However, the design should be thoroughly reviewed to insure

maximum compliance without adversely impacting other safety and design criteria such as aerodynamic smoothness.

(vii) Fuel Drain System. The fuel drain system and its attachments to the airframe should be designed and constructed, as far as practicable, to be crash resistant. The following and other appropriate means should be considered for a crash resistant design. Tank drains should be recessed or otherwise protected so that they are minimally damaged by impact. Attachment of fuel drains to the airframe should be made with either frangible fasteners or equivalent means to prevent impact induced tearout and leakage. The number of drains should be minimized by design techniques such as those that avoid low points in the lines. Drain lines should be made of ductile materials or otherwise designed to provide impact tolerance. Drain line connections, fittings, and other components should be designed to meet the fatigue requirements of § 27.571 and 27.952(d)(3). This ensures that unintended partial or full fatigue failures do not occur in normal operations that, if undetected, could compromise the CRFS's intended level-of-safety for the mitigation of post crash fire in a survivable impact. Drain valves should be designed to have positive locking provisions in the closed position in accordance with § 27.999(b)(2).

(17) Section 27.952(f) specifies that fuel tanks, fuel lines, electrical wires, and electrical devices must be designed and constructed, as far as practicable, to be crash resistant. Typical mechanical design criteria necessary to minimize fuel spillage sources, ignition sources, and their mutual contact in a survivable impact (i.e., provide crash resistance) are stated by the following subparagraphs. These mechanical design criteria should be incorporated in each design to the maximum practicable extent. Compliance is accomplished and assessed by a thorough design review and potential PCF hazard analysis with findings and solutions that are documented and approved. Any additional PCF hazards that are identified should be documented, included, addressed equally, and eliminated to the maximum practicable extent. Engineering evaluation, analysis, and tests are all required to determine the maximum level of practicability.

(i) They should not initiate or contribute to a post crash fire in an otherwise survivable impact. A hazard analysis should show which components are critical in this regard and should be assessed in detail for hazard elimination purposes.

(ii) Fuel and electrical lines and components should be located away from each other, away from probable crash impact areas, and away from areas where structural deformation or large objects (such as engines or transmissions) may, by crushing or penetration, cause fuel spillage or create an electrical ignition source, or both.

(iii) Fuel and electrical lines and components should be located separately and away from areas where impact and severing by rotor blades during a survivable impact are probable.

(iv) Fuel and electrical lines and components should be in no danger of being punctured or severed during a survivable impact by locally stiff vertical understructure such as a collapsed landing gear strut.

(v) Fuel and electrical lines and components should be routed separately in areas of maximum protection, such as along heavier structural members, and away from areas where significant damage is probable.

(vi) Fuel and electrical lines and components running through hazardous areas or directly through structure, such as a bulkhead, should be locally separated and protected from over-extension, severe abrasion and guillotine cutting by frangible panels, suitable clearance, rubber grommets, braided armor shielding (which should be nonconductive for electrical lines), or other equivalent means.

(vii) Fuel lines routed directly to instruments, transducers, or other equivalent devices should be crash resistant, in accordance with § 27.1337(a)(2), to minimize leakage in case of line rupture induced during a survivable impact.

(viii) Electrical wires routed directly into electrical boxes or instruments should be designed with sufficient local slack and locally routed in the least probable damage direction and zone, or otherwise protected to minimize the probability of damage-induced arcing.

(ix) Fuel lines routed directly into fuel tanks or other fuel system components should be locally routed in the least probable damage direction and zone, or otherwise protected, to minimize the probability of damage-induced fuel leaks.

(x) Fuel pumps mounted inside fuel tanks should be rigidly attached to the fuel tank only. If the pump is airframe mounted and has structural significance, it should have a frangible or deformable attachment (reference paragraph AC 27.952d(12)). Electrical boost pumps, if used, should be installed with a minimum of 6 inches of slack wire at the pump connection. The pump wires should be shrouded to prevent cutting in a survivable impact. Nonsparking, breakaway wire disconnects or other equivalent means may be used in lieu of the 6 inches of slack wire.

(xi) Fuel filters and strainers, to the maximum practicable extent, should not be located in or adjacent to the engine intake or exhausts and should retain the smallest practicable quantity of fuel.

(xii) The number of fuel valves should be kept to a minimum. If electrically operated valves are used, they should be installed with a minimum of 6 inches of slack in the electrical lines, unless protected by equivalent mean (reference 17(i)). The valves should be installed with the maximum amount of protection and separation of the electrical wires from the remainder of the valve assembly.

(xiii) Fuel quantity indicators mounted in or on fuel tanks should be selected, designed, and installed to provide the minimum puncture or tear hazard to the fuel tank in a survivable impact.

(xiv) Fuel tank and bladder enclosures should have smooth, regular shapes that avoid sharp edges and corners. Minimum concave and convex radius design criteria should be developed and adhered to. Magnesium should not be used in fuel cells, and any cadmium-plated parts should not be exposed to fuel.

(xv) Any shielding of electrical wires from abrasion, cutting, or overextension must be nonconductive.

(xvi) All fuel line installations not containing breakaway couplings should be reviewed to insure that they will not be overtensioned in a survivable impact, that they are properly grouped and properly exit fuel tanks, firewalls, and bulkheads in the area of least probable damage, and that their number and lengths are safely minimized.

(xvii) Crash resistance guidance for other basic components is contained in related AC paragraphs such as paragraphs AC 27.963 (§ 27.963, bladders and liners), AC 27.973 (§ 27.973, fuel tank filler connections) and AC 27.975 (§ 27.975, fuel tank vents).

(18) Section 27.952(g) requires rigid or semirigid fuel tank or bladder walls of any material construction to be both impact and tear resistant. This minimizes a PCF from impact-induced rupture and tear.

(i) A rigid tank or bladder can resist fluid pressure loads as a flat plate in bending. A semirigid tank can resist fluid pressure loads partially as a flat plate in bending and partially as a membrane in tension. Flexible liners are exempt from the requirements of § 27.952(g) since an unsupported flexible liner can resist only pure tension loads acting as a membrane (i.e., it has negligible bending strength). The rigid shell structure required by § 27.967(a)(3) that surrounds the flexible liner (membrane) carries the crash-induced impact and tear loads; whereas, the flexible liner is only significantly loaded in tension if the shell structure is penetrated by a sharp object on impact.

(ii) For metallic tanks, rigid or semirigid composite tanks (resin matrix), semirigid bladder designs (rubber matrix), metal-composite hybrid designs, and all other tank designs, impact and tear resistance should be shown by analysis and tests.

(iii) Designs using resin matrix composites should be subjected to the composite structure substantiation guidance of AC 20-107A, Composite Aircraft Structure, dated April 25, 1984, and paragraph AC 27 MG 8. Designs using rubber matrix composites are subject to the standard substantiation requirements for these devices, such as TSO-C80.

(iv) One set of crash resistance tests that constitutes an acceptable method of substantiation to the requirements of § 27.952(g) for all tank designs regardless of the materials used are those specified in Paragraphs 4.6.5.1 (Constant Rate Tear); 4.6.5.2 (Impact Penetration); 4.6.5.3 (Impact Tear); 4.6.5.4 (Panel Strength Calibration); and 4.6.5.5 (Fitting Strength) of MIL-T-27422B, "Military Specification; Tank, Fuel, Crash-Resistant Aircraft." These test requirements, or equivalent means, should be applied for and discussed early in certification. If the MIL-T-27422B tests are selected, severity differences between military combat requirements and the civil environment should be accounted for by reducing the MIL-T-27422B requirements, as follows:

(A) Constant Rate Tear. The minimum energy for complete separation should be 200 foot-pounds (reference 4.6.5.1).

(B) Impact Penetration. The drop height of a 5-pound chisel should be reduced to 8.0 feet (reference 4.6.5.2).

(C) Impact Tear. The drop height of a 5-pound chisel should be reduced to 8.0 feet and the average tear criteria should not exceed 1.0 inch (reference 4.6.5.3).

(19) Section 27.952(g) also requires that all fuel tank designs (regardless of the materials utilized and whether or not a flexible liner of any type is used) for each tank or the most critical tank be analyzed and tested to the criteria of paragraph (18)(iv) of § 27.952, or equivalent.

(20) Any type of flexible liner or bladder used in any type of fuel tank construction (integral, hard shell, etc.) must meet the strength and puncture resistance requirements of § 27.963(g). Section 27.963(g) contains the new puncture resistance requirement for flexible liners and other liner material certification requirements. Unlined, bladderless fuel tanks are also required to meet this requirement. Most unlined, rigid fuel cell designs should readily exceed the 370-pound minimum puncture force requirement because of overriding design requirements and material characteristics, such as stiffness and ductility.

NOTE: TSO-C80, "Flexible Fuel and Oil Cell Material," is referenced in the advisory material for § 27.963(g) and contains the detailed qualification requirements for these materials. The current puncture resistance test of TSO-C80, paragraph 16.0, states that the force required to puncture the bladder material must be greater than or equal to 15 pounds (e.g., screwdriver test). Section 27.963(g) has increased the TSO paragraph 16.0 puncture force value to be greater than or equal to 370 pounds. This is for fuel cell bladder or liner material only. Oil cell material puncture force requirements are not changed.

e. Typical Examples of Loading Modes and Test Setups for CRFS Components. The following figures, which are referred to periodically in the advisory

circular, show typical examples of test setups for CRFS components such as breakaway fuel fittings, hoses, hose end fittings, and hose assemblies.

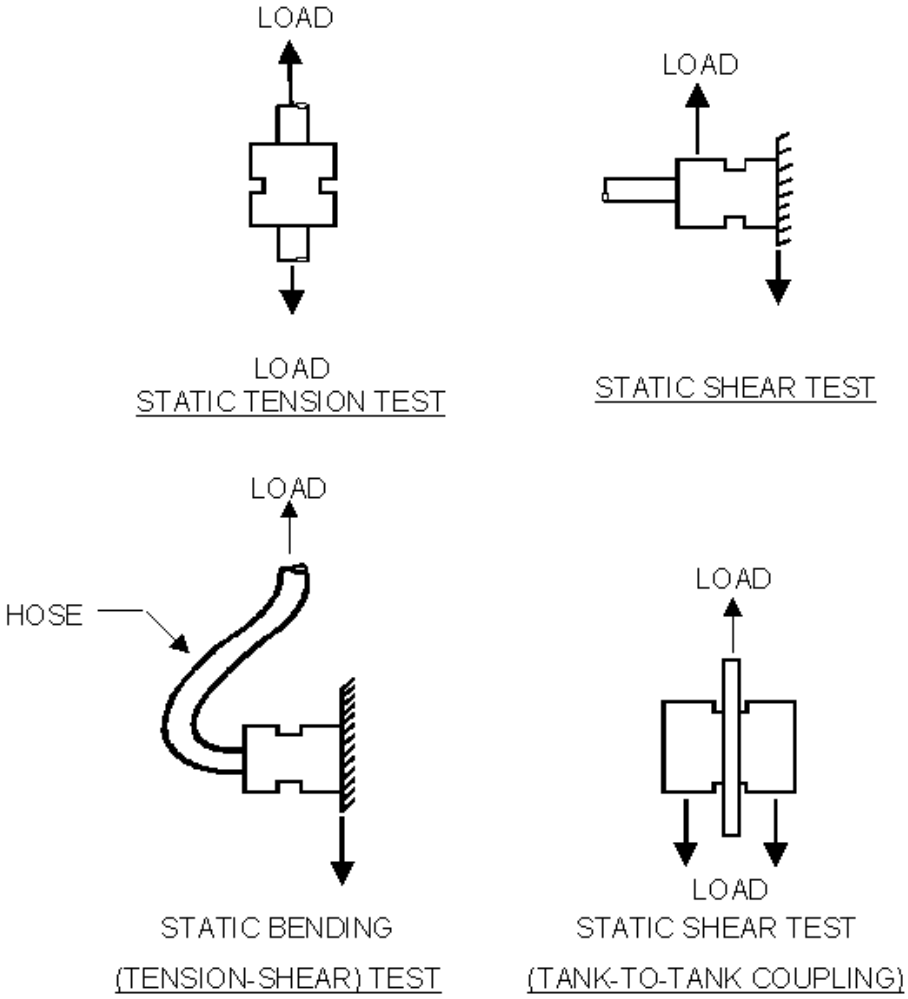

FIGURE AC 27.952-1 STATIC TENSION AND SHEAR LOADING MODES

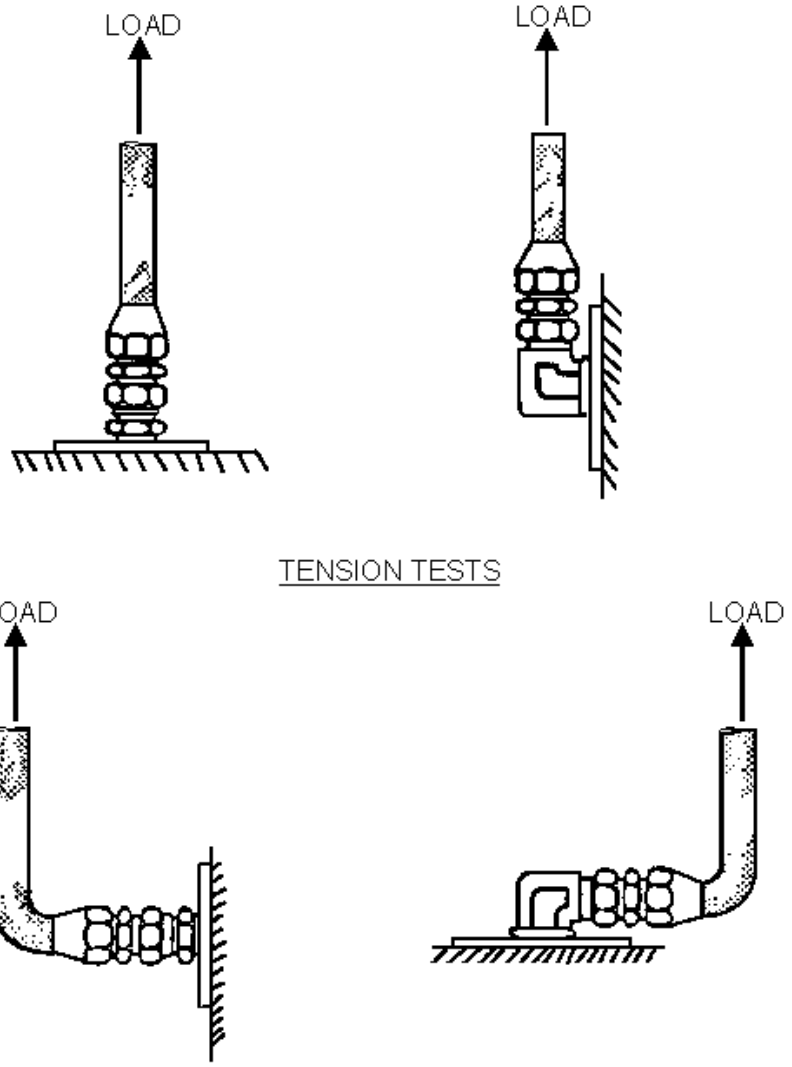

FIGURE AC 27.952-2 HOSE ASSEMBLY TESTS

Hose End Fitting Type	Fitting Size	Tension Load (lb)		Bending Load (lb)	
		Minimum Average Load*	Minimum Individual Load	Minimum Average Load*	Minimum Individual Load
STRAIGHT	-4	600	475	425	400
Tension = 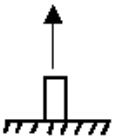	-6	700	575	425	400
	-8	900	650	650	600
	-10	1450	1175	675	625
Bending = 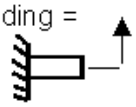	-12	1775	1475	950	850
	-16	2125	1825	1425	1300
	-20	2375	2075	1550	1425
90° ELBOW	-4	600	475	425	400
Tension =	-6	700	575	425	400
	-8	900	650	450	400
	-10	1450	1175	475	425
Bending = 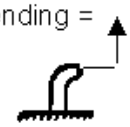	-12	1775	1475	500	450
	-16	2125	1825	775	700
	-20	2375	2075	1100	1000

*Average of at least 3 tests.

FIGURE AC 27.952-3 MINIMUM AVERAGE AND INDIVIDUAL LOADS FOR HOSE AND HOSE-END FITTING COMBINATIONS

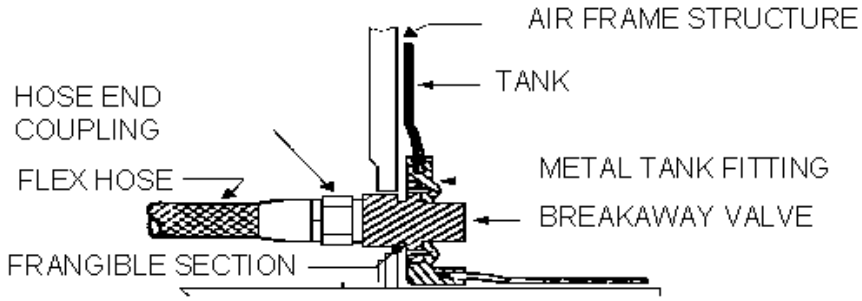

ITEM	LOWEST FAILURE LOAD (LB)*	FAILURE MODE
Flex Hose	**3000**	**Tension Breakage**
Flex Hose	**1500**	**Pull Out of End Fitting**
Tank Fitting	**7500**	**Pull Out of Tank**
Hose End Coupling	**1650**	**Break (Bending)**
Breakaway Valve	**2500**	**Pull Out of Tank Fitting**
Breakaway Valve	**Not More Than** $\frac{1500}{2} = 750$ **Not Less Than** $\frac{1500}{4} = 375$	**Break at frangible Section**

*Loads may or may not be representative; values are for explanatory purposes only.

FIGURE AC 27.952-4 TYPICAL METHOD OF BREAKAWAY FUEL FITTING LOAD CALCULATIONS (TANK INSTALLATION USED AS EXAMPLE ONLY; BASIC TECHNIQUE APPLICABLE TO OTHER CONFIGURATIONS)

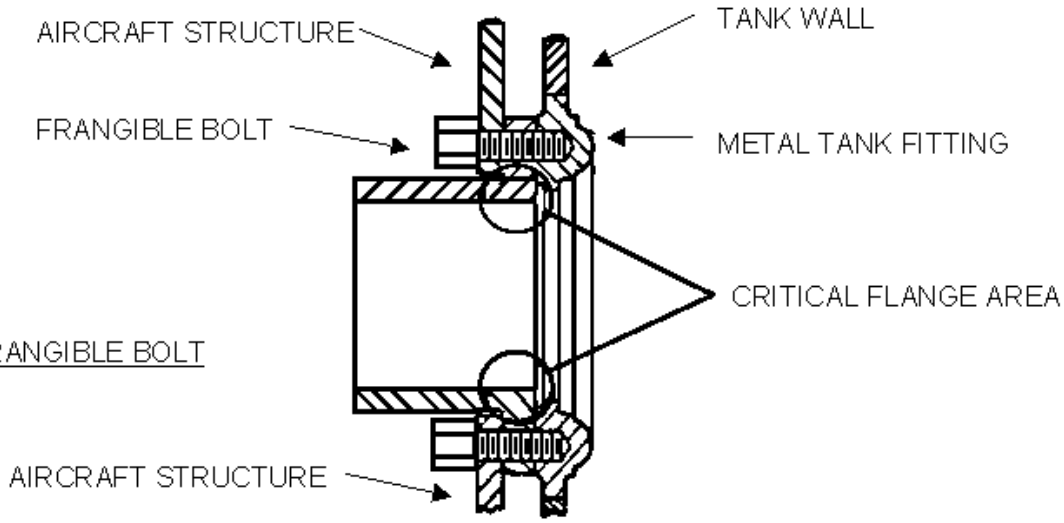

ITEM	LOWEST FAILURE LOAD (LB)*		FAILURE MODE
AIRCRAFT STRUCTURE	4000		SHEAR
TANK FITTING	3000		PULLOUT OF TANK
FLANGE	5000		SHEAR
FRANGIBLE BOLT	NOT MORE THAN $\frac{3000}{2} = 1500$	NOT LESS THAN $\frac{3000}{4} = 750$	BREAK (TENSION-SHEAR)

FIGURE AC 27.952-5 TYPICAL METHODS OF FRANGIBLE OR DEFORMABLE ATTACHMENT LOAD CALCULATIONS: EXAMPLE 1, FRANGIBLE BOLTS.

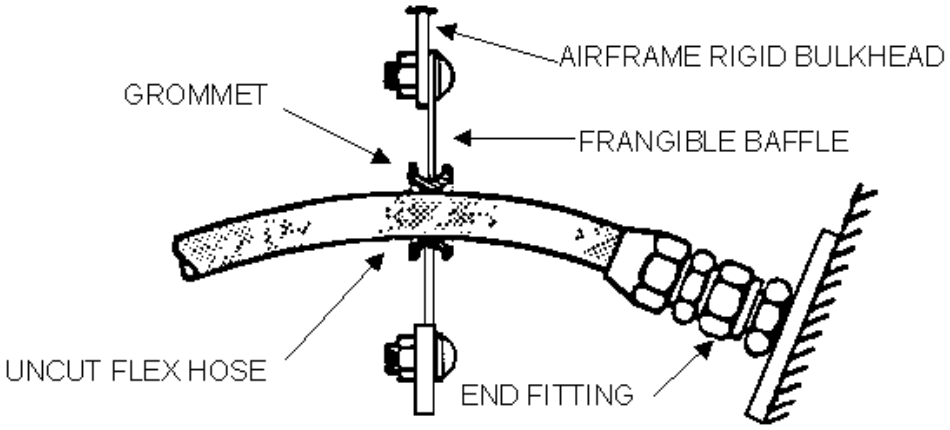

ITEM	LOWEST FAILURE LOAD (LB)*		FAILURE MODE
RIGID BULKHEAD	4000		BEARING
FLEX HOSE	3000		TENSION BREAKAGE
FLEX HOSE	1500		PULLOUT OF END FITTING
END FITTING	1750		BENDING
FRANGIBLE BAFFLE	NOT MORE THAN $\frac{1500}{2} = 750$	NOT LESS THAN $\frac{1500}{4} = 375$	BEARING

*VALUES ARE SHOWN FOR EXPLANATORY PURPOSES ONLY

FIGURE AC 27.952-6 TYPICAL METHODS OF FRANGIBLE OR DEFORMABLE ATTACHMENT LOAD CALCULATIONS: EXAMPLE 2, FRANGIBLE BAFFLE.

AC 27.953. § 27.953 FUEL SYSTEM INDEPENDENCE.

a. Explanation.

(1) Section 27.953(a) specifies independent fuel feed systems for each engine of multiengine rotorcraft; however, separate fuel tanks for each engine are not required.

(2) If a single tank is used to feed more than one engine, § 27.953(b) specifies:

(i) That independent fuel tank outlets be provided to each engine, each having a shutoff valve.

(ii) At least two vents for the tank located to minimize the probability of both vents becoming obstructed simultaneously.

(iii) Filler caps designed to minimize the probability of incorrect installation or in-flight loss.

(iv) That fuel supply from each tank outlet to any engine be independent of fuel supply to other engines.

b. Procedures.

(1) The purpose of § 27.953(a) is to ensure an independent fuel supply system for each engine on multiengine rotorcraft. Unlike the corresponding regulation for Category A, Part 29 rotorcraft, separate fuel tanks are not required.

(2) The assessment of an independent fuel supply system for each engine would begin at the fuel supply pickup point within the tank and continue to the engine fuel inlet at the engine.

(3) If supply line crossfeed capability is included as a feature, care must be exercised to ensure that the opening of the crossfeed does not jeopardize the continued safe operation of more than one engine. For example, if the crossfeed valve is automatically operated by a low pressure signal in the supply line for one engine, the possibility that fuel line leakage could cause opening of the crossfeed and jeopardize the continued safe operation of both engines should be considered. Similarly, opening the crossfeed valve with a suction lift system should not allow air into the fuel supply line of any engine.

(4) The independent fuel supply system requirement for each engine is for normal fuel system operations. Fuel system designs which allow the continued safe operation of all engines under expected fuel system component failure conditions (for example, a failed boost pump) by using common fuel flow paths under failure conditions are not prohibited.

(5) In § 27.953(b), the phrase “if a single fuel tank is used,” is intended to mean if a single fuel tank is used to feed more than one engine. This interpretation is needed in order to preclude, for example, a tri-engine design with two fuel tanks where two engines draw fuel by independent means from one tank, but only one vent is provided for that tank. This design would clearly violate the intent of § 27.953(b)(2) to assure that two vents be supplied if fuel is drawn by more than one engine from a single tank.

(6) If a single fuel tank is used to supply fuel to more than one engine:

(i) There should be independent tank outlets for each engine, each incorporating a shutoff valve at the tank. The phrase, “at the tank,” has rightfully been interpreted to allow the firewall shutoff valve, which may actually be some distance from the tank itself, to be used to show compliance with § 27.953(b)(1). Section 27.953(b)(1) specifically allows the shutoff valve, if located at the tank, to serve as the firewall shutoff valve provided the line between the valve and the engine compartment does not contain a hazardous amount of fuel that can drain into the engine compartment.

(ii) There should be at least two vents arranged to minimize the probability of both vents becoming obstructed simultaneously. Typically, the means used to prevent simultaneous obstruction is physical separation. The blockage or malfunction of any vent should not jeopardize the continued safe operation of more than one engine.

(iii) The filler cap(s) for the tank should be designed to minimize the probability of incorrect installation or in-flight loss. Usually, there should be only one way to install and lock a fuel cap; if more than one way is possible, either method should provide the positive sealing to avoid spillage. Minimizing the probability of in-flight fuel loss would include the ability to visually determine that the cap is properly installed and locked prior to flight.

(iv) Section 27.953(b)(4) simply clarifies that if a single tank is used to feed more than one engine, the provisions for independent fuel feed systems (reference § 27.953(a)) apply to the engines being fed from that tank.

AC 27.954. <u>§ 27.954 (Amendment 27-23) FUEL SYSTEM LIGHTNING PROTECTION</u>.

a. <u>Background</u>. During the initial development and promulgation of the standards concerning the airworthiness of rotorcraft, it was not deemed necessary to specify design features that would protect the rotorcraft from the meteorological phenomenon of lightning. This was due, in part, to the fact that rotorcraft were primarily operated in a VFR and nonicing environment. Also, a prudent pilot avoided thunderstorms where the possibility of encountering severe weather and a lightning strike was much greater. The construction, design, and operating environment of civil rotorcraft have changed markedly within the past two decades. Many rotorcraft are now authorized to fly IFR. Additionally, many rotorcraft now use the same advanced technologies in structures and

systems as do airplanes. Because of these facts the possibility of a lightning strike encounter to the rotorcraft has been greatly increased. If the fuel system of the rotorcraft has not been properly designed and constructed, a fuel vapor ignition may occur if the rotorcraft encounters a lightning strike. This occurrence generally results in a catastrophe to the rotorcraft. To prevent such a catastrophe and provide a level of safety equivalent to normal utility, acrobatic and commuter category airplanes, a specific rule for the lightning protection of normal category rotorcraft fuel systems was adopted in Amendment 27–23.

b. Explanation.

(1) This regulation requires that the rotorcraft's fuel system be designed and constructed so that an ignition of fuel vapor will not occur when the rotorcraft is involved in a lightning strike. For the purposes of this regulation the fuel system is comprised of the fuel tank with all its associated plumbing and any other areas of the rotorcraft likely to have fuel vapor present (such as sumps and drains for the tank itself). Externally mounted fuel tanks are also considered to be part of the "fuel system."

(2) Other associated installations such as electrical wiring in the fuel tanks which could provide a source of ignition due to an indirect or induced effect should also be considered.

c. Procedures.

(1) The current revision of Advisory Circular 20-53 provides guidance on an acceptable method and procedure to be utilized to demonstrate that the design and construction of the fuel system is compliant with § 27.954.

(2) FAA Report No. DOT/FAA/CT-89/22 contains additional information regarding the lightning environment. Also contained in this report are design and test techniques which provide for a design that will be adequately protected from fuel vapor ignition when the rotorcraft encounters the lightning environment. This report is available to the public by order from the National Technical Information Service, Springfield, VA 22161.

AC 27.955. § 27.955 FUEL FLOW.

a. Explanation.

(1) Section 27.955 is intended to ensure adequate fuel flow to the engine(s) at maximum power under the intended aircraft operating conditions and maneuvers.

(2) In showing adequate fuel flow, the rule provides--

(i) That the fuel be supplied within the appropriate engine fuel pressure range;

(ii) That the test be conducted with minimum fuel onboard, consistent with test safety; and

(iii) That operation with both main and emergency pumps be considered.

(3) Section 27.955(b) specifies that if an engine can be supplied with fuel from more than one tank, the fuel system must feed promptly when fuel becomes low in one tank and another tank is selected.

b. Procedures.

(1) Testing (including bench tests) has been the accepted method to show compliance with § 27.955(a). Analytical techniques may be used to adjust the system test results to various fuel conditions and flows or to account for minor modifications to a system. A purely analytical approach is not generally acceptable.

(2) Methods to adjust the test data for different fuel properties and flows should be verified by limited testing.

(3) If a suction lift system is used and hot fuel verification is involved, testing is appropriate.

(4) The proper interpretation of the phrase “100 percent of the fuel flow required under the intended operating conditions and maneuvers” may include consideration of acceleration fuel flow in addition to the steady-state fuel flow requirement.

(i) For example, if on a single-engine rotorcraft on a cold-day takeoff, engine torque is the limiting parameter, the steady-state fuel flow demand corresponding to that torque may be exceeded during engine acceleration in maneuvers.

(ii) In addition to the consideration of acceleration fuel flow, good design would include some margin to account for possible inadvertent overtorque.

(5) For multiengine rotorcraft, adequate fuel flow under OEI conditions should be assured in the critical fuel system configuration.

(i) If on a multiengine rotorcraft, it is acceptable to operate following an engine failure in more than one fuel system configuration (for example, if crossfeed is an acceptable mode) then the supplying of two engines through common components may be more critical than the OEI condition.

(ii) In verifying satisfactory fuel system operation for OEI conditions, the fact that the remaining engine may go to the gas producer speed topping limit fuel flow rather than to the steady-state OEI power value should be assessed.

(6) Adverse transient and steady-state maneuver loads should be considered since the g-loading experienced may tend to decrease the fuel inlet pressure below allowable limits.

(7) In assuring adequate fuel flow at the necessary engine inlet pressure (§ 27.955(a)(1)), both hot and cold fuel would normally be evaluated for the suction lift system, whereas cold fuel is usually more critical for the boosted pressure system.

(8) The method of specifying the fuel inlet pressure requirements varies with the engine model. Some of these include:

(i) Specification of a gage pressure as a function of altitude for suction system operation. The particular fuel and fuel temperature for demonstrating the criteria may be specified in the engine documents. Other approved fuels, fuel temperatures, and boost-pump-on operation are considered satisfactory if the demonstration with the specified fuel is successful.

(ii) Specification of a maximum allowable vapor-to-liquid ratio for hot fuel, and minimum absolute pressure as a function of altitude for cold fuels.

(iii) Specification of a fuel inlet pressure relative to the true vapor pressure of the fuel, in combination with a maximum allowable vapor-to-liquid ratio.

(iv) Specification of separate pressure limits for boost-on and suction lift operation.

(v) Specification of special limits for emergency use or emergency fuels.

(9) Because the various methods of specifying the engine inlet fuel pressure requirements are sometimes related to fuel temperature and altitude, it is often necessary to explore the extremes of the envelope to assure compliance rather than attempting to select one critical condition. Additionally, the rapid increase in fuel viscosity at colder temperatures, which tends to significantly increase system pressure drop, can more than offset a slight drop in required fuel flow such that the critical fuel inlet conditions may not be experienced at maximum engine fuel flow.
Figure AC 27.955–1 illustrates the point.

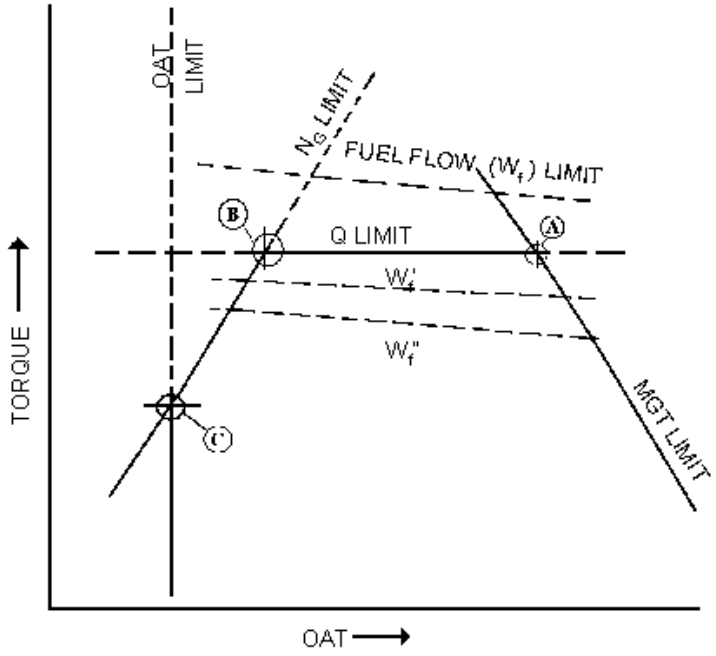

FIGURE AC 27.955-1 FUEL FLOW

NOTES:

(1) Point A on figure AC 27.955-1 is the highest fuel flow within aircraft limitations, but the system pressure drop is not expected to be maximum because of the low kinematic fuel viscosity.

(2) Point B is the maximum flow at cold temperatures but as the fuel temperature is further reduced, the fuel viscosity increases very rapidly.

(3) Point C represents the maximum viscosity of the fuel, but the fuel flow is somewhat reduced from point B. The maximum system pressure drops and, therefore, minimum fuel inlet pressure may occur between points B and C depending on the specific relationship of fuel viscosity to required fuel flow.

(10) A conservative demonstration would consider the maximum allowable fuel viscosity in combination with the maximum fuel flow. Otherwise, several test points may be required.

(11) For those systems which specify a minimum V/L ratio, the methods provided in Aerospace Recommended Practice (ARP) 492 published by the Society of Automotive Engineers are acceptable in evaluating test results.

(12) Since the lower quantity of fuel in the tank will reduce the hydrostatic head and thus the fuel inlet pressure, § 27.955(a)(2) specifies that the quantity of fuel in the tank should be minimum.

(13) Section 27.955(a)(4) specifies that each main and emergency pump be evaluated. If it can be determined which pump and flow path is critical, only that configuration would be tested. Similarly, for suction fuel systems, the critical flow paths and flow requirements should be evaluated. If pumps are required to supply the necessary fuel, § 27.1305(c) would require a fuel pressure indicator and § 27.1549 would require a red radial at the minimum safe operating fuel pressure for any fuel or fuel usage condition. This pressure limit should be used to determine compliance with § 27.955(a)(1) for all operations.

(14) Section 27.955(b) requires the fuel system to feed promptly when fuel becomes low in one tank and another tank is selected. This requirement is important because momentary fuel flow interruption must be expected to result in complete power failure and, for single engine rotorcraft, an emergency landing.

AC 27.955A. § 27.955 (Amendment 27-23) FUEL FLOW.

a. Explanation. Amendment 27-23 adds new requirements for test conditions to ensure that adequate fuel flow is available to the engine in critical combinations of adverse conditions that may be expected during operation of the rotorcraft. The amendment also requires a correlation between fuel filter blockage and the fuel filter warning device required by § 27.1305(q). Design and performance standards for auxiliary fuel tank and transfer tank fuel systems are provided. These changes were made to ensure that all parameters associated with fuel supply to the engine are adequately addressed.

b. Procedures. All of the policy material pertaining to this section remains in effect with the following additions:

(1) Section 27.955 is intended to ensure adequate fuel flow to the engine(s) during all operating conditions of the rotorcraft. This includes the fuel flows necessary to operate the engine(s) under the test conditions required by § 27.927. Testing (including bench or rig tests) has been the accepted method of showing compliance with this section although analytical techniques may be used to adjust system test results to various fuel flow conditions or to account for minor modifications to a system.

Analytical methods that are used to adjust the test results should be verified with limited testing. It should be shown during compliance testing that the fuel pressure, at the engine to airframe interface, will be within the limits specified by the engine manufacturer. The fuel pressure at this point should be maintained within limits specified by the engine manufacturer during all critical maneuvers and accelerations. All of the following conditions should be met during compliance testing unless it can be shown that combinations of the conditions are not possible.

(i) The fuel quantity in the tank(s) in use during the test may not exceed the unusable fuel quantity established under § 27.959, plus the minimum quantity required to conduct the test.

(ii) During the compliance test, the rotorcraft should be maneuvered to create the most critical fuel pressure head between the fuel tank outlet and the engine to airframe interface (engine fuel inlet).

(iii) For boost pump fed systems, it should be determined which pump (primary or secondary) would create the most critical restriction if it failed. The critical pump should then be installed to create the critical restriction, either by actual or simulated failure.

(iv) Various combinations of engine power demand, electrical power available, and motive flow requirements for ejector pumps, will have an effect upon the fuel flow and pressure available at the engine to airframe interface. Adequate fuel pressure should be available to the engine with the most critical combination of these parameters.

(v) Critical values of fuel properties that may adversely affect fuel flow and/or fuel pressure should be applied. This includes alternate types of fuel if certification with alternate fuels is requested. At the minimum, the fuel that will create the highest vapor to liquid ratio should be used during hot fuel tests (§ 27.961). The most viscous fuel should be used during cold fuel tests.

(vi) The fuel filter, required by § 27.997, should be partially blocked to simulate the maximum contamination allowable. The blockage should be sufficient to activate the impending bypass indicator that is required by § 27.1305(q).

(2) Unique Conditions. The phrase, "…Provide the engine with at least 100 percent of the fuel required under all operating and maneuvering conditions…" (§ 27.955(a)), includes unique flight conditions within the operational envelope of the rotorcraft. Critical conditions of fuel flow to the engine(s) may exist under the following conditions (and others identified by the applicant); therefore, they should be evaluated and tested if applicable:

(i) In a single engine rotorcraft, a rapid acceleration to maximum power (torque) that will be requested for certification may be a critical condition. In this case

the fuel flow required during the transient may exceed the fuel flow required for steady state at the maximum power condition.

(ii) In multiengine rotorcraft, a rapid acceleration to the maximum OEI power rating that will be requested may be a critical condition. The fuel flow during the transient may be higher than that required at the steady state OEI condition.

(3) If auxiliary fuel pumps (boost pumps) are used to supply fuel to the engines, and ejector pumps are used for cross-feed or other inter-tank fuel distribution systems, a test should be run that will place the maximum fuel demand on the auxiliary pump(s).

(4) In some multiengine rotorcraft, a single pump may be required to provide fuel flow to all engines in the event of an auxiliary pump failure. If this is the case, a test should be conducted with a simulated (or actual) failed auxiliary pump. If the functional auxiliary pump is designed to provide motive flow for cross-feed systems, the most critical condition of fuel flow demand should be tested.

(5) Transient and steady state maneuver loads (g-loading) may affect the fuel pressure at the engine to airframe interface. This effect should be considered and then tested, if appropriate.

(6) The methods of specifying the engine inlet fuel pressure requirements are sometimes related to fuel temperature and altitude. Therefore, it is necessary to explore the extremes of the envelope to assure compliance rather than attempting to select one critical condition. For instance, the increase in fuel viscosity at cold temperatures may increase system pressure drop and offset a slight drop in required fuel flow. In this case, critical fuel inlet conditions may not be experienced at maximum engine fuel flow.

(7) A conservative demonstration would consider the maximum allowable fuel viscosity in combination with the maximum fuel flow. Otherwise, several test points may be required.

(8) Fuel Transfer Systems. Section 27.955(b) specifies that if normal operation of the rotorcraft fuel transfer system continually delivers fuel to an engine feed tank, and maintains a specific fuel level in the feed tank, then the specified fuel level in the feed tank should be maintained automatically during all flight or surface operating conditions expected with the rotorcraft.

AC 27.959. § 27.959 UNUSABLE FUEL SUPPLY.

a. Explanation. This rule requires the applicant to establish a value for unusable fuel for each tank. This value for unusable fuel may be selected by the applicant to facilitate compliance with § 27.1337(b)(1) provided the amount is equal to or greater than the actual unusable fuel. The actual unusable fuel is the amount of fuel in the tank

when, in the critical flight attitude, evidence of system or engine malfunction occurs or, in the case of transfer tanks, when flow to the receiving tank is interrupted.

b. Procedures.

(1) The unusable fuel for each tank can be determined by flight tests which involve flight in the critical stable attitude and during maneuvers until indication of a malfunction. Maneuvers should be conducted to be critical or conservative with respect to unusable fuel. For boosted systems, the “first evidence of malfunction” may be a pressure fluctuation to below the fuel pressure minimum redline, engine power fluctuation, or boost pump failure warning indication. For suction lift systems, the indication may be engine power interruption. Since an accurate measurement of the remaining fuel in the tank should be obtained, a method to close off flow from that tank would be needed. For transfer tanks, or tanks which are limited to use only during cruise flight, the flight regimes usually can be limited to level flight at the CG condition which, by inspection, would create the maximum unusable fuel. For tanks for general use, the flight regimes should also include takeoff and landing using pitch attitudes to be expected, as well as hover and level flight conditions. The possible adverse effects of extreme lateral CG should be considered.

(2) Normally, these tests are conducted with all equipment (pumps, ejectors, etc.) operating as prescribed by the design. However, values for unusable fuel with pump failures, if significantly different, should also be determined and listed in the flight manual. The value for unusable fuel to be considered in the empty weight of the aircraft should be that value determined with the pump(s) operating normally; i.e., pump failure need not be considered.

c. While the procedures of paragraph (b)(1) are acceptable, fuel exhaustion during critical flight test conditions must be expected. To minimize this possible flight test hazard, the applicant may, in many cases, utilize analysis and/or ground tests involving normally available flight test data on aircraft attitudes, tank configuration studies, and critical flight condition studies to determine unusable fuel. Any questionable results, however, should be resolved by actual flight test or introduction of conservatism into the finding.

AC 27.961. § 27.961 FUEL SYSTEM HOT WEATHER OPERATION.

a. Explanation.

(1) Section 27.961 specifies that a hot fuel test be conducted on suction lift systems, and on other fuel systems conducive to vapor formation, to ensure that the system is free from vapor lock at a fuel temperature of 110° F under critical operating conditions.

(2) Pressure boosted systems would not ordinarily require hot fuel tests unless-

(i) There are high points in the fuel system which would allow accumulation of vapor; or

(ii) The engine fuel inlet pressure is negative relative to tank pressure because of low boost pump pressure or high fuel system pressure losses (but still within fuel pressure limits).

(3) The requirement to use 110° F fuel is a carryover from the recodification of CAR Part 6, although the use of hotter fuel would tend more toward vapor formation.

(4) The term “vapor lock” means a change in normal engine operation as a result of the formation of fuel vapor-air mixtures in the fuel feed system.

b. Procedures.

(1) The fuel type to be used should be that with the highest true vapor pressure (TVP) at the 110° F condition.

(2) The fuel should be heated as rapidly as possible since the longer fuel is heated the more vaporization occurs resulting in unconservative test results.

(3) If the test is performed at cool ambients, the fuel lines, tanks, etc., may have to be insulated to ensure that the fuel inlet temperature is approximately the same as would be experienced on a hot day.

(4) The fuel level should be the lowest consistent with test safety.

(5) The flight tests to the service ceiling should include maximum power climbs to selected intermediate altitudes where various maneuvers including the following are performed:

(i) Low power descent with rapid transition to takeoff power.

(ii) Turns and cyclic pull-ups with load factors comparable to the flight strain survey.

(iii) For multiengine rotorcraft with 30-minute and/or 2.5-minute OEI power ratings, conduct a rapid single-engine acceleration from low power to engine topping power followed by cruise at the maximum allowable OEI power.

(6) The flight test maneuvers should be repeated at the service ceiling.

(7) Except for transients and descents, the power available used should correspond to a 100° F sea level day lapsed 3.6° F/1,000 foot pressure altitude.

(8) Engine operation throughout the test should be normal; i.e., no surge, stall, flameout, etc., and the engine fuel inlet requirements should not be exceeded.

(9) Alternative tests on appropriate test rigs may be conducted ensuring proper simulation of altitude, ambient temperature, fuel temperature, fuel flow, and load factors.

AC 27.961A. § 27.961 (Amendment 27-23) FUEL SYSTEM HOT WEATHER OPERATION.

a. Explanation. Amendment 27-23 simplifies and restates the fuel system hot weather certification requirements and adds a requirement for the system to be capable of providing adequate fuel during probable transients. These changes clarified the existing wording to assure adequate qualification testing.

b. Procedures. This paragraph specifies that all suction lift systems and any other fuel system that may be conducive to vapor formation show satisfactory engine fuel inlet conditions (within criteria established by the engine manufacturer) when using the fuel with the highest true vapor pressure (TVP) at 110° F fuel temperature. Engine operating conditions should include those defined by §§ 27.927(b)(1) and 27.927(b)(2). Compliance can be shown by analysis, testing, or a combination of both.

AC 27.963. § 27.963 FUEL TANKS: GENERAL.

a. Explanation.

(1) Paragraph (a) sets forth general requirements for fuel tank structural aspects.

(2) Paragraph (b) requires design features to react forces to be expected from fuel surging due to accelerations of the rotorcraft.

(3) Paragraph (c) requires design features to ensure heat transfer from an engine compartment fire will not jeopardize the fuel tank integrity.

(4) Paragraph (d) requires design features to minimize the hazards of a leaking fuel tank and also requires design features to ensure that unwanted transfer of fuel from one tank to another does not occur due to differences of pressure in the tanks.

b. Procedures.

(1) For paragraph (a), the tests of § 27.965 are normally adequate if performed in conjunction with the reliability test of § 21.35 or other service simulation tests.

(2) For paragraph (b), internal or external stiffening may be required for surge resistance. If the analysis provided to show the adequacy of the surge resistance is

questionable, the slosh and vibration tests of § 27.965 may be accepted as substantiation of this requirement.

(3) The fuel tank clearance required by paragraph (c) may be determined by inspection of the design.

(4) The ventilation and interconnect requirements of paragraph (d) may usually be determined by flight tests which explore maximum rates of climb and descent with sensitive pressure measuring equipment installed inside tanks and in the ventilation airspaces provided to comply with this rule.

AC 27.963A. § 27.963 (Amendment 27-23) FUEL TANKS: GENERAL.

a. Explanation. Amendment 27-23 added new subsections (e) and (f) that require designs and tests to ensure that no exposed surface inside a fuel tank would, under normal or malfunction conditions, constitute an ignition source. They also set forth standards for the design and qualification of fuel tanks located in personnel compartments. These requirements are needed to ensure freedom from the hazards of fuel tank internal explosions and to ensure that fuel tanks, installed in passenger compartments, present no hazards to the personnel or to the rotorcraft.

b. Procedures. Section 27.963(e) requires the temperature of any exposed surface inside a fuel tank to be at least 50° F lower than the lowest auto-ignition temperature of the fuel or fuel vapors in the tank (reference paragraph AC 27.1185b(3), § 27.1185). For compliance with § 27.963(e), the internal component surface temperatures can be determined by flight or laboratory tests. The most critical flight conditions are established with sensitive temperature and pressure measuring equipment. This equipment is installed inside the tanks and in the ventilation air spaces.

AC 27.963B. § 27.963 (Amendment 27-30) FUEL TANKS: GENERAL.

a. Explanation. Amendment 27-30 adds a new requirement to paragraph (g) that (in addition to the current requirements) requires that the fuel tank bladder or liner be puncture resistant by meeting the TSO C-80, paragraph 16.0, screwdriver test requirements, using a new crash resistance based minimum puncture force of 370 lbs. A new requirement is also added to paragraph (f). Paragraph (f) now additionally requires that each fuel tank installed in a personnel compartment be crash resistant by meeting the applicable criteria of the new Crash Resistant Fuel System requirements of § 29.952 (Re: paragraph AC 27.952).

b. Procedures.

(1) Paragraph (g). The procedures for old paragraph (g) still apply under new (g). In addition, to comply with the added puncture resistance requirement under new (g), the requirements of § 27.952(h) must be met. Paragraph AC 27.952 gives the

detailed compliance procedures for § 27.952(h). The compliance procedures for § 27.952(h) also provide compliance for puncture resistance under § 27.963(g).

(2) Paragraph (f).The procedures for old paragraph (f) still apply under new (f). Compliance with the added crash resistance requirement of new (f) can be shown by conducting a thorough design review of each fuel tank compartment to ensure that all the regulatory criteria are met. (All fuel drains and vents should also be reviewed to ensure that they meet applicable § 27.952 requirements.) A basic static loads analysis followed by a stress analysis is typically used to determine that the enclosure protects the fuel tank and provides the crash resistance level necessary for occupant survival in an otherwise survivable impact. The applicable emergency load factors are typically used to design the enclosure. (Section 27.952 contains the corresponding load factors for fuel cells and their attachments.) The emergency load factors are typically adequate for all loading conditions encountered by the enclosure in service. The typical design approach is to design the enclosure to crush at a rate approximately the same as the crush rate of the fuel tank and to ensure that all puncture hazards (such as sharp projections either enhanced or created by impact that would penetrate the fuel tank) are minimized in design. (See paragraph AC 27.952 guidance material for details.)

27.965. § 27.965 (Amendment 27-12) FUEL TANK TESTS.

a. Explanation. This regulation defines the tests that must be accomplished to show compliance for rotorcraft fuel tanks.

(1) Four basic types of fuel tanks are: (1) a metal tank installed in the aircraft or at the wing tip; (2) an integral tank; (3) a nonmetallic self-supporting tank (fiberglass); and (4) nonmetallic flexible bladder-type tanks.

(2) There are two basic tests required by the regulations. One test procedure substantiates the design by tests and analysis by applying applicable pressure to the tank. The other procedure substantiates the design by vibration and slosh tests of the tanks.

b. Procedures.

(1) Pressure Test. The 3.5 or 2.0 PSI pressure test listed in the regulations should be conducted unless the pressure with a full tank for maximum limit acceleration or emergency acceleration is greater. Section 27.337 gives the value for the limit acceleration.

(2) Vibration and Slosh Tests.

(i) There is not an absolute value of what constitutes “large” unsupported or unstiffened flat areas. However, it has generally been considered that any fuel tank with less than 10 gallons capacity, constructed with simple, wide, flat geometric shape and using metal (in metal tanks) of 0.05-inch thickness or greater would not require

tests in accordance with § 27.965(d). Using this basis, a 14- by 14-inch properly constructed tank would not require vibration and slosh tests.

(ii) If the tank construction is of a metal or integral design which can be shown to be similar to previously approved tanks with acceptable service history, the vibration and slosh tests may not be required. Similarity would entail comparing the construction technique; i.e., similar panel size, similar sealing methods, skin and angle thickness, loads being similar, etc.

(iii) For fuel tanks located in the sponson or stub wing, the entire sponson or wing should be rocked and vibrated unless it can be determined that a certain portion of the tanks is critical. In this case a fixture should be developed such that the portion of the tank being tested is rocked about a pivot point which would produce the same amplitudes of motion for the portion of the tank being tested, as if the whole sponson or wing was being tested. Structure loads in conjunction with these tests have not been required.

(iv) The amplitude of vibration specified in the regulation is double amplitude (peak to peak). Vibration amplitudes less than one thirty-second of an inch must be justified by instrumented tests of the tank installed in the aircraft.

(v) The vibration and slosh procedures listed in Military Specification, MIL-T-6396, have been accepted to show compliance with § 27.965(d).

(3) After all tests have been conducted, the tanks should be leak checked using test fluid conforming to Federal Specification TT-S-735 type III or equivalent.

AC 27.967. <u>§ 27.967 FUEL TANK INSTALLATION</u>.

a. <u>§ 27.967(a)</u>:

(1) <u>Explanation</u>. This paragraph was added by Amendment 27-30 to create parallelism of both regulatory structure and level of safety between Parts 27 and 29 by the Crash Resistant Fuel System final rule on October 3, 1994. This paragraph sets forth a series of detail requirements for fuel tanks intended to ensure that tank leakage or failure is unlikely. These regulatory requirements pertain primarily to proper support of the tank and protection against chafing.

(2) <u>Procedures</u>. For conventional metal tanks, the support devices, commonly called “cradles,” should be designed with wide flanges or cap strips at the contact area with the tank to distribute the loads in the tank material. To prevent chafing, install nonmetallic padding, treated to eliminate absorption of fuel between the tank and the support structure. Cork strips sealed with shellac and bonded to the support structure have been found suitable. Fuel cell sealant material should be applied over rivet heads and in corners. Bladder cells must be designed to fit accurately in the cell cavity in

order to avoid fluid loads in the bladder itself. The interior of the cavity should be smooth to avoid damage to the bladder cells.

b. § 27.967(b):

(1) Explanation. This paragraph requires the design to provide ventilation and drainage of spaces adjacent to fuel tanks to avoid accumulation of fuel or fumes to be expected from minor leakage of fuel tanks. This is needed to minimize the possibility of fire or explosion in these spaces. An exception to this requirement is allowed for bladder cells installed in a closed compartment. For this configuration, ventilation may be limited to that provided by compartment drains if the ventilation is adequate to maintain proper pressure relationship between the bladder cell and cell compartment air spaces.

(2) Procedures. With the assumption that fuel tank leakage will occur, require the tank compartments to be provided with drains at any low point. These drains should conduct fuel clear of the rotorcraft and should be three-eighths of an inch or larger in diameter to minimize clogging. As with any drain intended to function in flight, verification that reverse flow will not occur due to pressure differentials at each end of the drain is appropriate. Ventilation for these tanks should involve openings in the compartment such that in-flight slipstream and/or rotor downwash will rapidly and continuously purge the tank compartment of fuel fumes. Openings should not be located so the fumes or fuel can reenter the rotorcraft. For flexible tank liner configurations (bladder cells), no specific ventilation is required if the cell is located in a compartment which is closed, except for drain holes. Note that a cell leak may be expected to produce fumes in the compartment airspace which are flammable; thus, items installed in bladder tank cavities shall not create a hazard during either normal or malfunction conditions. The vent system for the interior of the cell must be adequate to ensure that the bladder cell interior pressure is always positive or at least neutral with respect to any other airspace in the cell compartment to prevent collapse of the bladder cell. Drainage of the cell compartment should meet the criteria discussed above.

(3) A light mesh or string network hung between the bladder cell and its compartment walls is recommended to provide seepage channels to facilitate fuel leakage to the low-point compartment drains.

c. § 27.967(c):

(1) Explanation. This paragraph requires a measure of protection for fuel tanks from adverse effects of a fire in a fire zone.

(2) Procedures. Verify that a firewall meeting the requirements of § 27.1185 effectively separates any fuel tank from any engine. To minimize hazards of heat transfer to a fuel tank through a fire wall during an engine compartment fire, verify that at least one-half inch of clear airspace exists between the tank and the firewall.

d. § 27.967(d):

(1) Explanation. This paragraph is intended to prevent hazards to integral fuel tanks to be expected by impingement of flames or products of combustion from an engine compartment fire.

(2) Procedures. Review the design for relative positions of engine compartments and integral fuel tanks to estimate the flowpath of fire or heat from an engine compartment fire. Consider autorotation for single-engine rotorcraft and, for multiengine rotorcraft, low power descent as power-on flight in this evaluation. If questionable compliance exists, clear indication of the flow impingement patterns may be identified by ejecting dye from engine compartment openings during flight.

AC 27.969. § 27.969 FUEL TANK EXPANSION SPACE.

a. Explanation.

(1) Space must be provided in each fuel tank system to allow for expansion of the fuel as a result of a fuel temperature increase. The space provided for this purpose must have a minimum volume equal to 2 percent of the tank capacity.

(2) The fuel tank filling provisions must be designed to prevent inadvertent filling of the fuel tank expansion space when fueling the rotorcraft in the normal ground attitude on level ground.

b. Procedures.

(1) Fuel tanks with interconnected vents need not have provisions for fuel expansion in each tank if equivalent expansion provisions are available in another area.

(2) The fuel filler ports should be located below the designated fuel expansion space height to ensure that the fuel expansion space cannot be inadvertently filled with fuel.

(3) Each fuel tank expansion space must comply with the venting requirements of § 27.975.

(4) For multiengine rotorcraft using a single expansion tank to satisfy the requirements of this regulation, the effect of blockage or failure of any vent from this common tank must be considered with respect to compliance with the applicable engine isolation requirements.

AC 27.969A. § 27.969 (Amendment 27-23) FUEL TANK EXPANSION SPACE.

a. Explanation. Amendment 27-23 allows some interconnected fuel tanks to have a common expansion space in lieu of individual expansion spaces. This change

relieves complex design requirements where simpler designs have proven to be satisfactory.

b. Procedures. There is no change to the suggested methods of compliance.

AC 27.971. § 27.971 FUEL TANK SUMP.

a. Explanation.

(1) Each fuel tank must be provided with a drainable sump which is located at the lowest point in the tank with the rotorcraft in a normal ground attitude.

(2) The main fuel supply to any engine may not be drawn from the bottom of any fuel sump.

(3) Each fuel sump drain must comply with the requirements of § 27.999.

b. Procedures.

(1) Each fuel sump should have an effective capacity which is not less than 0.25 percent of the tank capacity or 1/16 gallon, whichever is greater, with the rotorcraft in any ground attitude to be expected in service. This sump capacity will provide a level of safety equivalent with other normal category aircraft (reference § 23.971).

(2) Demonstration of compliance with the minimum sump capacity requirements may be shown by analysis, test, or a combination of both depending on the complexity of the fuel system design.

(3) If minimum sump capacity is to be demonstrated by test, the following general test procedures will produce acceptable results:

(i) Determine the most critical ground attitude to be expected in service from such considerations as uneven terrain, slope landing limits, etc. The critical attitude for each tank will be that for which the maximum amount of fuel can be withdrawn from the tank using the rotorcraft's fuel supply system.

(ii) Using a rotorcraft with a fuel system which conforms to the final design specification, position the rotorcraft to the critical attitude for the tank to be tested using leveling jacks, actual terrain of a predetermined slope, or other similar means.

(iii) Using the rotorcraft's fuel supply system, pump fuel from the tank being tested until the supply system will no longer withdraw fuel. This can be done without the rotorcraft engine actually running unless an engine driven pump is an essential component of the fuel supply system. Caution should be exercised if an engine is to be run to fuel exhaustion since engine surge at the pump cavitation point can result in damaging torsional loads in the transmission drive system.

(iv) When no more fuel can be removed from the tank with the rotorcraft fuel supply system, return the rotorcraft to a normal ground attitude. Completely drain the sump of the tank or tanks being tested into a container and measure the volume drained from each sump. The volume measured must satisfy the minimum capacity requirements of paragraph AC 27.971b(1).

AC 27.971A. § 27.971 (Amendment 27-23) FUEL TANK SUMP.

a. Explanation. Amendment 27-23 prescribed minimum values for fuel tank sump capacity, authorized the use of a sediment bowl in lieu of a sump, and required these sumps or sediment bowls to be effective in any ground attitude which can reasonably be expected in service.

b. Procedures. The policy material pertaining to this section remains in effect. Additionally, if the rotorcraft is equipped with a sediment bowl or chamber, the capacity should be at least one ounce for every 20 gallons of fuel tank capacity. The sediment bowl or chamber should be located so that water will drain from all parts of the tank to the sediment bowl or chamber when the rotorcraft is in any allowable normal ground attitude. Compliance with the minimum sump capacity or the sediment bowl or chamber requirements may be shown by analysis, test, or a combination of both, depending upon the complexity of the fuel system.

AC 27.973. § 27.973 FUEL TANK FILLER CONNECTION.

a. Explanation. Fuel tank filler connections must be designed so that no fuel can enter into any part of the rotorcraft other than the fuel tank during fueling operations. Spilled fuel must be considered as well as fuel entered into the fuel filler port.

b. Procedures.

(1) Each fuel filler opening must be identified with the markings and placards required by § 27.1557.

(2) Each filler cap should provide a fuel-tight seal for the main filler opening unless the fuel tank is vented through a small opening in the filler cap.

(3) Each fuel filling point should have a provision for electrically bonding the rotorcraft to ground fueling equipment.

(4) Compliance with the requirements of this paragraph can normally be demonstrated by analysis and physical inspection of the fuel filler design. Testing is not normally required.

AC 27.973A. § 27.973 (Amendment 27-30) FUEL TANK FILLER CONNECTION.

a. Explanation. The original, single unlettered paragraph of old § 27.973 is redesignated as paragraph (a) by Amendment 27-30. The new (a) has three subparagraphs. These changes have been made to both make § 27.973 parallel to § 29.973 and to incorporate the new crash resistant fuel system requirements of § 27.952 (re: paragraph AC 27.952).

(1) New paragraph (a) is revised to require that all fuel tank filler connections be made fuel tight under both normal operations and during a survivable impact in accordance with the requirements of § 27.952(f) and its associated advisory material.

(2) New paragraph (a)(1) is added to require that each filler be marked as prescribed in § 27.1557(c)(1).

(3) New paragraph (a)(2) is added to require that each recessed filler connection that can retain an appreciable amount of fuel have a drain that discharges clear of the rotorcraft.

(4) New paragraph (a)(4) is added to require that each filler cap provide a fuel tight seal under the fluid pressures expected in service and in a survivable impact.

(5) New paragraph (b) is added to require that each filler cap or cap cover warn when the cap is not fully locked or seated to a fuel tight condition on the filler connection.

b. Procedures.

(1) The compliance procedures for general paragraph (a) are those of § 27.952(f) and those described herein for the three subparagraphs to (a).

(2) The compliance procedures for (a)(1) and (a)(2) can normally be demonstrated by analysis and physical inspection of the fuel filler design. Testing is not normally required.

(3) The compliance procedures for (a)(3) are as follows: The fuel tank filler connection must be shown to be leak free under the worst case fuel pressures (due to combination of static pressure and sloshing induced head) from both normal operations and from a survivable impact. The worst case loads from these two conditions must be determined. In most cases the load resulting from a survivable impact will prevail. For the survivable impact, normally the worst case combined pressure loading occurs at the time of impact at the fuselage that places the filler tube neck (at the vicinity of the filler cap connection) in a vertical or near vertical attitude. Once the critical load case is determined by analysis, test, or a combination; the fuel tank filler connection (or an approved mockup) can be tested for sealing capability by applying a fluid such as water at the critical pressure at the critical attitude of the tube (with the cap inverted) for a

period of at least 5 minutes. If no significant leakage occurs, then compliance has been shown. Significant leakage is defined as leakage in excess of 10 drops per minute at any time during or after the 5-minute test.

(4) Compliance procedures for paragraph (b) are as follows: Visual means, such as placards and alignment marks, and mechanical means, such as detents and locking slots, must both be provided. This is necessary to give both a clear visual and mechanical indication that a filler cap or a filler cap cover is properly installed and fuel tight after each removal and replacement. Visual indications such as alignment marks, that show proper installation should be easily read from a distance of at least 5 feet by anyone making a routine inspection or check.

AC 27.975. § 27.975 FUEL TANK VENTS.

a. Explanation.

(1) Each fuel tank for which an expansion space is required per § 27.969 must be vented from the top part of the expansion space.

(2) Fuel tank vents must be designed to minimize the probability of the vent being restricted or completely clogged by dirt or ice.

(3) Vents of fuel tanks having interconnected outlets must be interconnected as required per § 27.963.

b. Procedures.

(1) There should be no point in any vent line where moisture can accumulate with the rotorcraft in the ground attitude or level flight attitude unless drainage is provided.

(2) Each vent should be constructed to prevent siphoning of fuel during any normal operation.

(3) No vent line or drainage provision should be terminated at a point where the discharge of fuel from the outlet would constitute a fire hazard or from which fumes could enter any personnel compartment.

(4) The vent system capacity and installed configuration should maintain acceptable differences of pressure between the interior and exterior of tank. Analysis and/or flight testing may be required to demonstrate this capability depending on the fuel system design. If flight testing is required, the following flight test procedure is one method of verifying proper vent system operation.

(i) Using a rotorcraft with a fuel tank and vent system which conforms to production design specifications, install differential pressure instrumentation which will

measure the difference between the gas pressure inside each fuel tank expansion space and the air pressure in the cavity or area surrounding the outside of the fuel tank.

(ii) Conduct ground and flight tests recording the differential pressures between the inside and the outside of the fuel tanks. The following conditions should be evaluated:

(A) Refueling and defueling (if applicable).

(B) Level flight to V_{NE}.

(C) Maximum rate of ascent and descent.

(iii) Compare the measured differential pressure values with the maximum allowable for the fuel tank design being evaluated. For flexible bladder type fuel cells, the pressure inside the tank should not be significantly less than the surrounding pressure to avoid the possibility of collapsing the bladder.

AC 27.975A. § 27.975 (Amendment 27-23) FUEL TANK VENTS.

a. Explanation. Amendment 27-23 added a new paragraph § 27.975(b) that requires fuel tank vent systems be designed to minimize fuel spillage and subsequent fire hazards in the event of rollover of the rotorcraft during landing or ground operation.

b. Procedures. The policy material pertaining to this section remains in effect. Additionally, fuel tank vent system design should minimize spillage of fuel in the vicinity of a potential ignition source in the event of rollover during landing or ground operation.

AC 27.975B. § 27.975 (Amendment 27-30) FUEL TANK VENTS.

a. Explanation. In addition to the current requirements, Amendment 27-30 revises paragraph (b) to add the requirement that the venting system be designed to minimize fuel spillage through the vents to an ignition source in the event of a fully or partially inverted rotorcraft fuselage attitude following a survivable impact. (A survivable impact is defined in paragraph AC 27.952.) Since rotor action on impact and other impact dynamics have been found in numerous cases to cause rollovers or other unusual postcrash attitudes, compliance with this paragraph would significantly mitigate the postcrash fire hazard by minimizing fuel spills through vents to ignition sources when the postcrash attitude of the rotorcraft would allow gravity and/or post impact sloshing induced fuel spills through a normally open fuel vent.

b. Procedures

(1) In addition to the compliance procedures for the previous amendment; installation of design features, such as gravity activated shuttle valves in the vent lines (that are normally open but close under certain predictable, postcrash scenarios that are

generated by involvement in a survivable impact that results in either an inverted or partially inverted fuselage attitude) must be accomplished.

(2) Once selected, the design feature chosen for compliance should be shown to function effectively without significant leakage by either full scale and/or bench tests that apply the total pressure forces that correspond to a 100 percent full, 50 percent full, and 5 percent full fuel load applied to the device in a worst case survivable impact. (If a critical fuel level can be clearly identified, then only that fuel level and the corresponding critical total pressure load need be utilized for certification approval.) The total pressure forces should be determined and applied in a manner that simulates the magnitude and rate of load onset (due to a combination of gravity and sloshing) that would occur in otherwise survivable impacts that would involve rollover attitudes of 45 degrees (or the minimum spillage roll angle), 90 degrees (rotorcraft on its side), and 180 degrees (rotorcraft fully inverted). (In some designs, the 45-degree attitude may not be the correct initial roll angle at which fuel spillage through a given vent would begin to occur due to the placement of the vents on the fuselage. For these cases, the minimum angle should be determined by analysis.)

(3) Once all test conditions are defined, these tests should be conducted with all structural deformation present in the test set up that is necessary to simulate the actual structural deformation either in or applied to the vent line or system in a worst case survivable impact. The structural deformation to be applied can be determined by rational analysis, analysis, test, or a combination. Significant leakage is defined as leakage of 10 drops per minute, or less, after all testing is complete. The criteria of 10 drops per minute, or less, corresponds to the criteria of 5 drops per minute, or less, per breakaway coupling half (i.e., a total of 10 drops per minute, or less, for the entire separated coupling) specified in the advisory material for § 27.952 (re: paragraph AC 27.952).

AC 27.977. § 27.977 (Amendment 27-11) FUEL TANK OUTLET.

a. Explanation.

(1) This provision prescribes a fuel strainer for the fuel tank outlet (suction lift system) or for the booster pump (boosted systems) for both reciprocating and turbine engine installations.

(2) This requirement is intended to ensure that relatively large, loose objects which may be present in the fuel tank do not interfere with fuel system operation. The provision of § 27.997 should ensure protection from smaller contaminants which may occur in service.

b. Procedures.

(1) Section 27.977(a) specifies an 8- to 16-mesh-per-inch strainer for reciprocating engine installations, and a strainer which will prevent passage of any

object which could restrict fuel flow or damage any fuel system component for turbine installations.

(2) In addition to the requirement of § 27.977(a), the flow area of the strainer should be at least five times the area of the outlet line. Furthermore, the diameter of the strainer must be at least that of the fuel tank outlet line.

(3) Each finger strainer should be accessible for inspection and cleaning.

(4) Compliance with § 27.977 is usually verified by inspection, and testing is not required. The ice protection provisions of § 27.951(c) are applicable to the strainer at the fuel outlet, and testing to show compliance with that provision may be required.

SUBPART E - POWERPLANT

FUEL SYSTEM COMPONENTS

AC 27.991. § 27.991 FUEL PUMPS.

a. Explanation.

(1) Section 27.991(a) provides a definition of the main pump(s) and § 27.991(b) requires an "emergency pump(s)." The main pump(s) that is certified as part of the engine does not fall under § 27.991 requirements. The main pump(s) discussed under § 27.991 should therefore be considered the "main aircraft pump(s)."

(2) The main aircraft pump(s) consists of whatever pump(s) is required to meet engine or fuel system operation throughout the range of ambient temperature, fuel temperature, fuel pressure, altitude, and fuel types intended for the rotorcraft. If the main aircraft pump(s) is required to meet the above criteria, then an emergency pump(s) is required. Airframe supplied pumps intended for use during engine starting only are not considered to be main aircraft pumps and do not require emergency backup pumps.

b. Procedures.

(1) Each pump classified as a main aircraft pump, which is also a positive displacement pump, must have provisions for a fuel bypass. An exception is made for fuel injection pumps used on certain reciprocating engines and for the positive displacement, high pressure, fuel pumps routinely used in turbine engines. The bypass may be accomplished via internal spring check valve and fuel passage or by external plumbing and a check valve. High capacity positive displacement pumps with internal pressure relief and recirculation passages should be checked for overheating if they may be expected to operate continuously at or near 100 percent recirculation.

(2) Section 27.991(b) specifies a requirement for "emergency" pumps to provide the necessary fuel after failure of any (one) main aircraft pump. (Injection pumps and high pressure pumps used on turbine engines are exempt.) To ensure adequate pressure, the "emergency" pump should produce 100 percent of the engine flow requirement. In addition, to allow for pump or fuel system deterioration or possible filter impediments, 125 percent of takeoff flow at minimum pressure should be provided by the "emergency" pump. As stated in this rule, the "emergency" pump must be operated continuously or started automatically to ensure continued normal operation of the engine. For some multiengine rotorcraft, another main aircraft pump may possibly be used as the required "emergency" pump. In this case, the dual role of this pump requires it to have capacity to feed all engines at the critical pressure/flow condition. Availability of fuel flow from this backup pump must be automatic and this function should be verified in the preflight check procedure. The flight or ground crew should be

provided with a means to determine that a main pump failure has occurred so that it can be replaced in a timely manner.

AC 27.991A. § 27.991 (Amendment 27-23) FUEL PUMPS.

a. Explanation. Amendment 27-23 revised § 27.991 to clarify fuel pump redundancy requirements. Redundancy for fuel pump failure includes consideration of both the pump and the pump motivating device.

b. Procedures. All of the policy material pertaining to this section remains in effect with the following clarification: Airframe supplied fuel pumps that are intended for use only during engine starting are not considered as “main” airframe pumps and do not require “emergency” backup pumps.

AC 27.993. § 27.993 (Amendment 27-2) FUEL SYSTEM LINES AND FITTINGS.

a. Explanation. This rule outlines design requirements for fuel system lines.

b. Procedures.

(1) Compliance is usually obtained by employing routing and clamping as described in paragraph 709, Chapter 14, Section 2, of AC 43.13-1A and by monitoring the arrangement throughout the developmental and certification test period. Requirements for approved flexible lines may be resolved by utilizing lines listed as TSO C53a approved for installation in either normal or high temperature areas as appropriate. The service life of TSO C53a approved high pressure fuel hoses is not established by regulation. Service life is determined by the aircraft manufacturers and included in their quality control system which is monitored by the FAA/AUTHORITY.

(2) Verify that adequate clearance exists between lines and elements of the rotorcraft control system at extremes of control travel, including control deflections and, for flexible lines (hoses), possible variations in routing.

(3) Flexible lines inside fuel or oil tanks require special evaluation to ensure that the external surfaces of these lines are compatible with the fluids involved and that fluid sloshing will not cause line failure. Lines inside tanks should be routed to avoid impingement by fuel or oil filler nozzles.

(4) Fuel system lines and fittings located in any area subject to engine fire conditions must comply with the requirements of § 27.1183.

(5) Compliance with § 27.999 requires that fuel system lines contain no low points from sagging or looped routing unless drains are provided which will completely drain the system with the rotorcraft in its normal attitude on level ground.

(6) Good design practice suggests that all flammable fluid lines should be routed to minimize the possibility of rupture in the event of a crash or from engine rotor disc failure.

AC 27.995. § 27.995 FUEL VALVES.

a. Explanation. Valves must be provided in the fuel supply system to each primary and auxiliary powerplant which will permit positive fuel flow feeding and shutoff from each fuel supply source. Although the engine throttle control system will provide one positive fuel shutoff means at the engine fuel control, additional fuel shutoff valves will normally be required in each fuel supply system to satisfy the requirements of paragraph (d) of this rule and § 27.1189(c).

b. Procedures.

(1) The fuel valve control must be located within easy reach of the appropriate crewmember and must satisfy the requirements of §§ 27.1141(c) and 27.1189(b).

(2) If independent fuel supply sources are provided, the fuel valve or valves must allow independent feeding and shutoff of fuel from each supply source.

(3) Multiengine rotorcraft fuel systems must have fuel valves which comply with the requirements of § 27.953(b)(1).

(4) No fuel valve may be located on the engine side of any firewall. Each valve should be supported so that loads resulting from its operation or from accelerated flight conditions are not transmitted to the lines connected to the valve.

(5) If check valves are included in the fuel supply system, each check valve should be constructed, or otherwise incorporate provisions, to preclude incorrect installation of the valve.

AC 27.997. § 27.997 (Amendment 27-20) FUEL STRAINER OR FILTER.

a. Explanation. This rule provides for a main in-line fuel filter designed to collect all fuel impurities which could adversely affect fuel system and engine components downstream of the filter. The rule also requires a sediment bowl and drain (or that the bowl be removable for drain purposes) to facilitate separation of contaminates, both solid and liquid, from the fuel. This section is not intended to require installation of the filter between the fuel tank outlet and the first fuel system component which is susceptible to restricted fuel flow because of contaminates (such as a fuel heater or ice trap equipment).

b. Procedures.

(1) The filter should be mounted in a horizontal segment of the fuel line to facilitate proper action of the sediment bowl. If the filter is located above the fuel tank, it becomes necessary to activate a fuel boost pump to achieve positive drainage of the filter bowl. Without pump pressure, air may enter the fuel system during the filter draining operation and, for turbine engines, result in transient power surges or engine failure during subsequent engine operation. A flight manual note to require pump(s) to be “on” during filter draining would be appropriate.

(2) Section 27.997(d) sets forth a requirement for filter capacity. The capacity requirement may be substantiated by showing that the filter, when partially blocked by fuel contaminates (to a degree corresponding to the indicator marking or setting required by § 27.1305(a)), does not impair the ability of the fuel system to deliver fuel at pressure and flow values established as minimum limitations for the engine. The filter mesh must be sized to prevent passage of particulate matter which cannot be tolerated by the engine. Part 33 requires that the degree and type of filtration be established for the engine. This information, available in the FAA/AUTHORITY-approved Engine Installation Manual, should be the basis for selection of the airframe filter mesh. Although a test may be devised and conducted, data from the filter manufacturer usually are acceptable to verify compliance. Note that when the filter capacity is reached, continued flow of contaminated fuel may result in engine failure. A flight manual note regarding precautionary procedures is appropriate.

(3) Part 33 (through Amendment 33-6) has an identical requirement for a fuel filter for engine fuel systems; however, it is not intended that two filters should be required.

AC 27.997A. <u>§ 27.997 (Amendment 27-23) FUEL STRAINER OR FILTER</u>.

a. <u>Explanation</u>. Amendment 27-26 requires that a fuel strainer or filter should be installed between the fuel tank outlet and the first fuel system component that is susceptible to fuel contamination. Components that will be protected from contamination include but are not limited to fuel metering devices which control flow rate, fuel heaters, and positive displacement pumps. The amendment also requires a sediment bowl and drain (unless the bowl is readily removable for drain purposes) to facilitate separation of solid and liquid contaminants from the fuel.

b. <u>Procedures</u>.

(1) The fuel strainer or filter should be accessible for draining and cleaning. It should incorporate a screen or other element that is easily removable. It should be mounted so that its weight is not supported by the inlet or outlet connections of the strainer itself, unless it can be shown that adequate strength margins exist in the lines and connections.

(2) The fuel strainer or filter should have a sediment trap and drain (unless the trap is readily removable for drain purposes). The volume capacity of the sediment trap is specified in § 27.971(a) (0.10 percent of the tank capacity or 1/16 of a gallon).

(3) The fuel strainer or filter mesh should provide the filtration stipulated in the FAA/AUTHORITY-approved engine installation manual that is prepared for the type certificated engine (FAR Part 33).

(4) The fuel strainer or filter should have the capability to remove any contaminant that would jeopardize the flow of fuel that is necessary to meet the requirements of § 27.955. In addition, the strainer or filter should have a bypass system with an impending bypass indicator (Refer to § 27.1305(a)(17)). When the strainer or filter is partially blocked with contaminants, to the degree that the fuel flow requirements of § 27.955 can no longer be achieved, the impending bypass indicator should be activated. At this point, the strainer or filter should not yet be bypassing unfiltered fuel. Although a test may be devised and conducted, data from the filter manufacturer usually are acceptable to verify compliance. Note that when the filter capacity is reached, continued flow of contaminated fuel may result in engine failure. A flight manual note regarding precautionary procedures is appropriate.

(5) Section 33.67(b) has an identical requirement for a fuel filter for engine fuel systems; however, it is not intended that two filters should be required.

AC 27.999. <u>§ 27.999 (Amendment 27-11) FUEL SYSTEM DRAINS</u>.

a. <u>Explanation</u>. This regulation provides for fuel system drains and defines the requirements which the system must meet.

b. <u>Procedures</u>.

(1) The location and function of the fuel system drains are an integral part of any fuel system. There may be several drains required dependent upon the fuel system design. Each fuel tank sump and certain types of fuel strainers or filters require a means to drain (reference §§ 27.971 and 27.997).

(2) Selection of the location and orientation of the drain discharge in the design phase is important to assure that there is no impingement on any part of the rotorcraft. To show compliance with the requirement may require tests dependent upon whether the applicant has a previously approved design which is similar or if the system is a new design for which no previous experience is available.

(3) The location of the drain valve should be selected so that the requirements for accessibility, ease of operation, and protection are met.

(4) Spring-loaded fuel drain valves conforming to MIL-V-25023B, TSO-C76, or equivalent, may be approved as “positive locking” valves for those installations where

the person operating the valve can visually confirm that the valve is closed, provided the applicant has shown that the valve will not open inadvertently under any foreseeable operating condition.

AC 27.999A. § 27.999 (Amendment 27-23) FUEL SYSTEM DRAINS.

a. Explanation. Amendment 27-23 adds the requirement that fuel system drains be effective with the rotorcraft in any allowable ground attitude including uneven terrain. In addition, the change amended § 27.999(b)(2) to require fuel drains have a means to ensure positive closure, as contrasted to positive locking, when in the “off” position. This will accommodate designs featuring spring-loaded drain closures that have been found to be satisfactory.

b. Procedures. All of the policy material pertaining to this section remains in effect. Additionally, selection of the location and orientation of the fuel drain discharge in the design phase is important to assure that there is no impingement upon any part of the rotorcraft. The location and orientation should also ensure effective fuel drainage when the rotorcraft is parked on uneven terrain. To show compliance with the requirement, tests may be required, dependent upon whether the applicant has a previously approved design that is similar, or the system is a new design for which no previous experience is available.

SUBPART E - POWERPLANT

OIL SYSTEM.

AC 27.1011. § 27.1011 (Amendment 27-23) OIL SYSTEM--GENERAL.

a. Explanation.

(1) This regulation defines the general oil system requirements for the engine.

(2) Each engine oil system should be independent of the system for the other engine(s).

(3) The minimum acceptable usable oil capacity, in terms of rotorcraft endurance and engine maximum oil consumption, is specified.

(4) The oil cooling provisions should be capable of maintaining the oil inlet temperature at or below the maximum allowable value.

b. Procedures.

(1) The requirement for an independent oil system for each engine should ensure continued adequate lubrication of each engine in the event of failure of the opposite engine(s) or of that opposite engine's oil system. The provision does not require that the engine oil system be independent of other components; e.g., the use of the engine's oil system for rotor drive system component lubrication is not precluded by this regulation.

(2) The usable oil capacity for each engine's oil system should not be less than the product of the maximum endurance of the rotorcraft times the engine's maximum oil consumption, plus some margin to ensure adequate circulation and cooling.

(3) Instead of a rational analysis of rotorcraft endurance and engine oil consumption rate, a usable oil capacity of 1 gallon for each 40 gallons of usable fuel may be used. (This concept should apply only to reciprocating engines.)

(4) Flight tests should be required to show adequate oil cooling provisions (reference § 27.1041).

AC 27.1013. § 27.1013 (Amendment 27-9) OIL TANKS.

a. Explanation. This regulation, along with § 27.1015, defines the oil tank design and installation requirements.

(1) The oil tank should be designed and installed to withstand, without failure, any vibration, inertia, fluid, and structural loads expected in operation.

(2) For reciprocating engines, the expansion space should not be less than 0.5 gallons or 10 percent of the tank capacity, whichever is greater.

(3) For turbine engines, the expansion space should not be less than 10 percent of the tank capacity.

(4) It should not be possible to inadvertently fill the expansion space with the rotorcraft in the normal ground attitude.

(5) Adequate venting should be provided.

(6) Oil overflow from the filler opening into the oil tank compartment should be prevented.

b. Procedures.

(1) The structural analysis of the tank, including the attachments, should ensure that the tank will not leak under the vibration, inertia, fluid, and structural loads expected in service.

(2) The expansion space may be determined by calculating the difference between the volume up to the vent opening and the volume to the spillover level of the filler opening. The expansion space volume must not be less than 10 percent of the volume to the filler spillover level (tank capacity) or not less than 0.5 gallons for reciprocating engine installations with oil tank capacities of 5 gallons or less.

(3) To assure adequate venting under all normal flight conditions, the tank should be vented from the top portion. Traps where condensed water vapor might freeze and obstruct the vent line should be avoided. If other components, perhaps an engine speed reduction gearbox, are vented to the engine oil tank, the oil tank vent line should be sized to handle this additional requirement as well as the air normally entrained in the return oilflow from the engine.

(4) A suitable method to prevent oil spillover from the filler opening from entering the compartment containing the oil tank would be a scupper with an attached drain line that discharges clear of the rotorcraft.

AC 27.1015. § 27.1015 (Amendment 27-9) OIL TANK TESTS.

a. Explanation. This regulation specifies the requirements which the oil tank tests should verify. Each oil tank should withstand, without leakage, an internal pressure of 5 PSI. This regulation also specifies that each pressurized oil tank used with a turbine

engine must withstand, without leakage, an internal pressure of 5 PSI plus the maximum operating pressure of the tank.

b. Procedures. Test procedures for demonstrating these requirements are relatively simple and straightforward. Suitable adapters are fabricated to seal the various tank openings and also a fitting to introduce pressurized air into the tank. The air source needs to be regulated, and a suitable pressure gauge with a current calibration is required. Appropriate methods to check for leakage should also be available. This leak check can be a dip tank, soap and water mixture, or any other method which will provide acceptable results. Test fluid conforming to Federal Specification TT-S-735, Type III, or equivalent, is also an acceptable leak check substance.

AC 27.1017. § 27.1017 OIL LINES AND FITTINGS.

a. Explanation. This regulation outlines the certification requirements for oil lines and fittings.

b. Procedures.

(1) The line should be supported to prevent excessive vibration, and flexibility should be provided between points of relative motion. Advisory Circular 43.13-1A, Chapter 14, Section 2, Paragraph 709, may be used as guidance for the system design.

(2) Flexible hose must be approved. Generally, hoses listed in TSO-C53a or those qualified to equivalent military standards are accepted.

(3) The engine inlet and outlet oil lines should not have an inside diameter less than the corresponding inside diameter of the engine connection, and no line splices are permitted between connections; however, larger lines may be needed to ensure adequate oil flow to the engine or the transmission. Oils which exhibit high viscosity, long oil lines, and arrangements with little or no elevation of the tank outlet with respect to the engine inlet, are design characteristics which should be carefully checked.

AC 27.1019. § 27.1019 (Amendment 27-9) OIL STRAINER OR FILTER.

a. Explanation. This regulation defines the requirements for the engine oil system strainer or filter. If a strainer or filter which meets the requirements of this paragraph is incorporated as part of the type certificated engine, an additional airframe filter is not required.

b. Procedures. This paragraph requires an oil strainer or filter through which all of the oil flows for each turbine engine installation. The strainer or filter should be sized to allow oil flow at the flow rates and within the pressure limits as specified in the engine requirements. The effect of oil at the minimum temperature for which certification is sought should be accounted for.

(1) For each oil strainer or filter required by § 27.1019(a) which has a bypass, the bypass should be sized to allow oil flow at the normal rate through the oil system with the filtration means completely blocked.

(2) For each oil strainer or filter installed per this rule, the capacity must be such that when operating with oil contaminated to a degree greater than established during engine certification, the oil flow and pressure are within the operating limits established for the engine. The mesh requirements are determined by the engine installation documents for the filtration of particle size and density.

(3) Unless the filter is located at the oil tank outlet, § 27.1019(a)(3) requires an indicator that will show when the contaminant level of the filtration system, as specified in § 27.1019(a)(2), has been reached. The indicator should signal a contaminant level which will allow completion of the flight before the filter would enter a bypass condition. The indicator may be a pop-out button or other maintenance cue that is checked on each preflight.

(4) An evaluation of the construction and location of the bypass associated with the strainer or filter should be accomplished. The appropriate installation of the filter based on this evaluation would preclude the release of the collected contaminants in the bypass oil flow.

(5) If an oil strainer or filter installed in compliance with this regulation does not have a bypass, there must be a means to connect it to the warning system required in § 27.1305(r). This warning should indicate to the pilot the contamination before it reaches the capacity established in § 27.1019(a)(2).

(6) Section 27.1019(b) covers the blocked oil filter requirements associated with reciprocating engine installations. The lubrication system should be such that the normal oil flow will occur with the filter completely blocked.

AC 27.1019A. <u>§ 27.1019 (Amendment 27-23) OIL STRAINER OR FILTER</u>.

a. <u>Explanation</u>. Amendment 27-23 relaxed an unduly restrictive requirement for an “indicator” to indicate the contamination level of oil filters. The rule change allows acceptance of a “means to indicate” the contaminate level to allow a wider range of acceptable methods of compliance.

b. <u>Procedures</u>. All of the policy material pertaining to this section remains in effect except that an “indicator” is not required to indicate the contamination level of the oil filters. Unless the filter is located at the oil tank outlet, § 27.1019(a)(3) requires that the oil strainer or filter have the means to indicate when the contaminant level of the filtration system, as specified in § 27.1019(a)(2), has been reached. If an indicator is installed, it should signal a contaminant level that will allow completion of the flight

before the filter reaches a bypass condition. The indicator may be a pop-out button or other maintenance cue that is checked on each preflight inspection.

AC 27.1021. § 27.1021 OIL SYSTEM DRAINS.

a. Explanation. This regulation requires provisions be provided for safe drainage of the entire oil system with the rotorcraft at normal ground attitude and defines certain requirements for assuring that no inadvertent oil flow occurs from the system provided.

b. Procedures.

(1) The design of the oil system must provide a means for safe drainage of the entire oil system. This may require one or more drains depending on the design of the system. The routing of fluid lines should be such that drooping lines and fluid traps which are undrainable are avoided.

(2) The drain(s) must provide a means for a positive lock in the closed position. The method by which the lock is accomplished may be manual or automatic.

AC 27.1027. § 27.1027 (Amendment 27-23) TRANSMISSION AND GEARBOXES: GENERAL.

a. Explanation. Amendment 27–23 adds a new § 27.1027. This new section provides the regulations for rotorcraft transmission and gearbox lubrication systems. It incorporates lubrication system requirements that were derived from existing engine oil system requirements. These additional requirements have been adjusted or modified to reflect the needs of transmissions and gearboxes. Transmission and gearbox lubrication system regulations are similar to those for engines; therefore, reference is made to the engine lubrication sections as applicable.

b. Procedures.

(1) The pressure lubrication systems for rotorcraft transmissions and gearboxes should comply with the same requirements as the engine lubrication systems stipulated in §§ 27.1013 (except §§ 27.1013(c)), 27.1015, 27.1017, 27.1021, and 27.1337(d). These sections provide the requirements for oil tanks, tank tests, oil lines and fittings, and oil system drains.

(2) Each pressure lubrication system for rotorcraft transmissions and gearboxes should have an oil strainer or filter. The strainer or filter should:

(i) Remove any contaminants from the lubricant which may damage the transmission, gearbox, or other drive system component and any contaminants that may impede the lubricant flow to a hazardous degree.

(ii) Be equipped with a means to indicate that the bypass system (required by § 27.1027(b)) is at the point of opening due to the collection of contaminants on the strainer or filter, and;

(iii) Be equipped with a bypass system that will permit lubricant to continue to flow at the normal rate if the strainer or filter is completely blocked. In addition, the bypass system should be designed so that contaminants that have collected on the filter will not enter the bypass flow path when the system is in the bypass mode.

(3) Section 27.1027(c) requires a screen at the outlet of each lubricant tank or sump that supplies lubrication to rotor drive systems and rotor drive system components. The screen should remove any object that might obstruct the flow of lubricant to the filter required by § 27.1027(b). The requirements of § 27.1027(b) do not apply to the tank outlet screen.

(4) Splash-type lubrication systems for rotor drive system gearboxes should comply with §§ 27.1021 and 27.1337(d).

SUBPART E - POWERPLANT

COOLING

AC 27.1041. § 27.1041 (Amendment 27-2) COOLING--GENERAL.

a. Explanation. The rotorcraft design should provide for cooling to maintain the temperature of all powerplant and power transmission components and fluids within the limitations established for the items. Cooling provisions should be adequate for shutdown and for water, ground, and flight operating conditions. The adequacy of the cooling provisions should be demonstrated by flight testing.

b. Procedures.

(1) Test conditions and procedures necessary to demonstrate adequate cooling for water, ground, flight, and shutdown conditions should be agreed upon between the applicant and the FAA/AUTHORITY certification engineer. A cooling test proposal which defines the agreed test points and procedures should be prepared well in advance of the official certification testing.

(2) The test conditions selected would typically include climb, cruise, hover, and shutdown after a prolonged hover. Hover OGE should be evaluated if sling load operation is envisioned for the rotorcraft. One test condition which should be examined, particularly with regard to transmission cooling, is the point of highest multiengine mechanical power at the maximum ambient temperature. This is identified as test point “A” in figure AC 27.1041-1. The selection of test points should be tempered with engineering judgment and based on results from similar aircraft if such data are available. In showing compliance with the cooling requirements, the applicant should not be required to exceed rotorcraft established limits (gross weight, drive system torque, measured gas temperature, etc.), aircraft power required, or power available. The applicant may elect, however, to exceed these limits in order to minimize test points by conservative testing, or to anticipate future growth (increased gross weight, etc.).

(3) The need for a comprehensive cooling test plan prior to certification testing cannot be overemphasized. Highly derated engine installations, the relationship of power required to power available, the use of bleed air devices which would increase the measured gas temperature while aircraft power required remains the same, auxiliary cooling provisions, and the increase in engine temperatures with engine deterioration are factors which could affect the selection of cooling demonstration test points.

MULTIENGINE POWER AVAILABLE

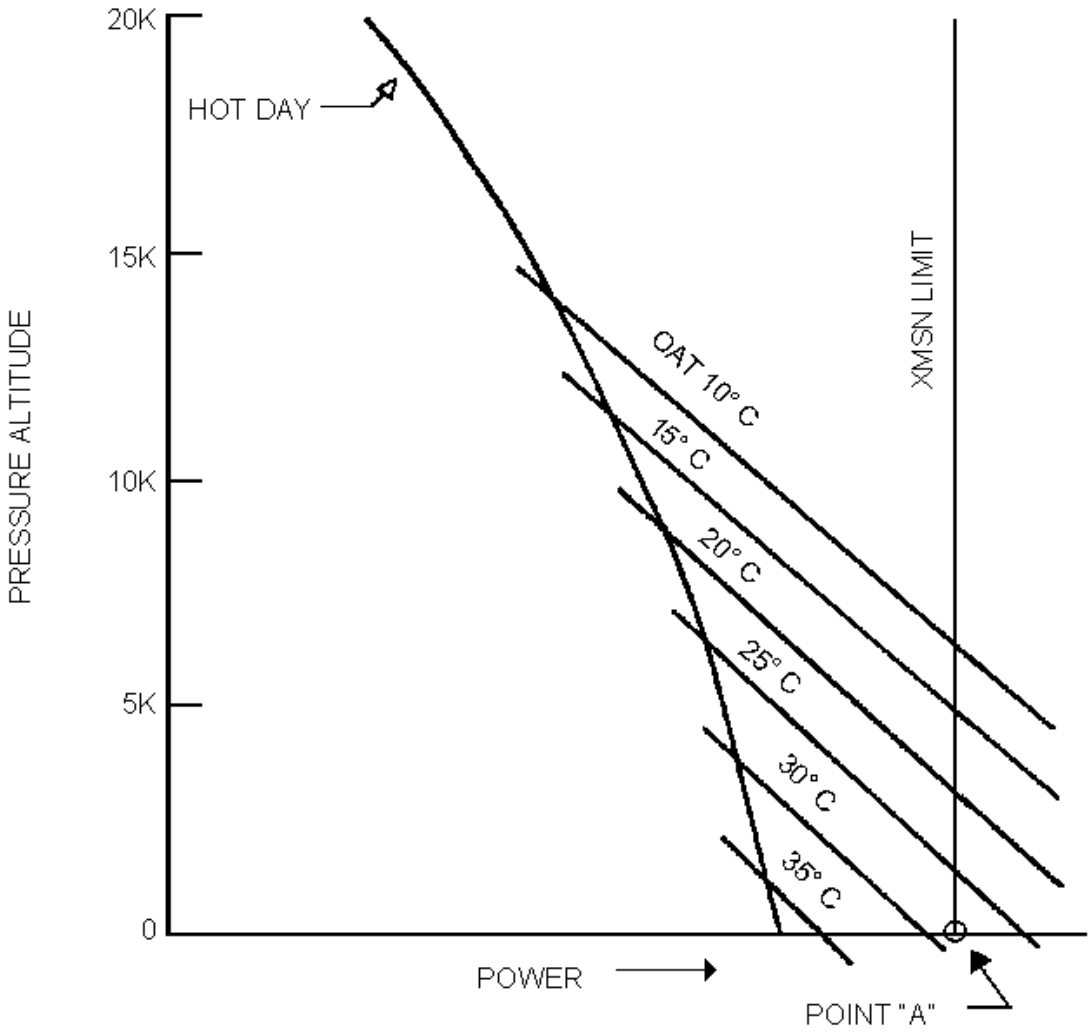

FIGURE AC 27.1041-1 ADDITIONAL COOLING TEST POINT

AC 27.1041A. § 27.1041 (Amendment 27-23) GENERAL.

a. Explanation. Amendment 27-23 provides clarification and definition of powerplant components required to be considered when evaluating the performance of the powerplant cooling systems and arrangements.

b. Procedures. The rotorcraft design should provide for cooling to maintain the temperature of all powerplant and power transmission components and fluids within the limitations established for the items. Components to be considered include, but are not limited to, engines, rotor drive system components, auxiliary power units, and the cooling or lubricating fluids used with these components.

AC 27.1043. § 27.1043 (Amendment 27-14) COOLING TESTS.

a. Explanation.

(1) This section defines the requirements for accomplishing the required cooling tests. Section 27.1043(a)(1) requires that certain ambient temperature correction factors be applied unless testing is accomplished at the maximum ambient atmospheric temperature prescribed. No corrected temperature may exceed specified limits. The requirement in § 27.1043(a)(4) that test procedures be in accordance with § 27.1045 does not limit testing to the conditions prescribed in that section. Section 27.1041(a) provides the basis for examination of other possible critical operating and shutdown conditions.

(2) This section establishes the hot-day condition as 100° F at sea level, decreasing 3.6° F per 1,000 feet of altitude above sea level. The applicant may select a lower maximum ambient atmospheric temperature for winterization installations. If the cooling tests are conducted under conditions deviating from the maximum anticipated air temperature, then the following correction factors are required unless another FAA/AUTHORITY-approved method is applicable.

(3) The temperature of engine fluids and powerplant components (except cylinder barrels) which have established limits must be corrected by adding to them the difference between the maximum anticipated air temperature and the ambient air temperature at the time of the first occurrence of the maximum component or fluid temperatures recorded during the cooling tests.

(4) Cylinder barrel temperatures must be corrected by adding 0.7 of the difference between the maximum anticipated air temperature and the ambient air temperature at the time of the first account of the maximum cylinder barrel temperature recorded during the cooling tests.

(5) During the cooling tests for reciprocating engines, the fuel used must be of the minimum grade approved for the engine and the mixture settings should be those

normally used in the flight stage for which the cooling tests are conducted. The carburetor parts list used during these tests becomes a requirement in the definition of the engine/carburetor configuration.

b. Procedures.

(1) Seldom is testing actually accomplished at the maximum required ambient temperature of at least 100° F at sea level lapsed 3.6° F per 1,000 feet pressure altitude. Component and fluid temperatures must therefore be corrected to derive the item temperature that would have been reached if the test day had matched exactly the maximum ambient temperature day. The applicant may select a higher maximum ambient temperature for cooling certification than the 100° F sea level hot day prescribed. Provisions are also made for selecting a maximum ambient temperature less than the 100° F sea level hot day for winterization installations not intended to function at the hot day conditions.

(2) When cooling test ambient conditions are cooler than the selected or prescribed hot day conditions, the applicant may take advantage of cooling air or fluid flows that would exist at hot day conditions. For example, thermostatically controlled oil cooler flow could be set for hot day conditions.

(3) The component and fluid temperature correction factor to be applied when test ambients do not correspond to the hot day conditions is commonly called the "degree-for-degree correction." It may be possible to justify, and the regulation allows the application of a more refined, less conservative correction factor. A correction factor other than degree-for-degree should be based on engineering test data.

(4) No corrected temperatures may exceed established limits. In order to maintain temperatures within established limits, the applicant may be willing to accept lesser performance than the full capability of a device. For example, a starter/generator capable of cooling under test cell conditions to 200 amperes continuous load may be limited to a lesser value, perhaps to 150 amperes, when installed in the aircraft due to cooling considerations. This continuous load for cooling must be equal to or greater than the allowable continuous load designated on aircraft instruments.

(5) If the engine or transmission cooling system heat load is increased in any way by rotorcraft configuration changes (affecting airflow, etc.), by other systems, by accessories (alternators, generators, etc.), or by any other heat source or potential heat source, then the maximum cumulative heat load from the worst-case combination of all these sources which is possible in service must be present during the cooling tests.

c. Thermal Limit Correction.

(1) An important correction factor which is not discussed in the regulations, but is frequently necessary to show the cooling adequacy required by § 27.1041, is the thermal limit correction factor. This factor is sometimes used if, at test day conditions,

the engine measured gas temperature does not correspond to that which would have occurred on a minimum specification engine at hot day conditions.

(2) The correction factor would not apply to those components not affected by changes in measured gas temperature (MGT) at a constant power. Typical items expected to be affected by changes in the MGT at constant power would be engine oil temperature, thermocouple harnesses, or other fluid, component, or ambient temperatures in the vicinity of the engine hot-section or exhaust gases. Other items remote from the hot-section, perhaps the starter-generator or fuel control, would not be expected to be influenced by MGT variations; however, the items affected and the magnitude of the factor to be applied should be established by testing.

(3) There are several acceptable methods for establishing the appropriate thermal limit correction factor during development testing. The general idea is to establish a stabilized flight condition, typically ground-run or IGE hover, and to vary the measured gas temperature at approximately fixed power and OAT conditions. This may be accomplished by utilizing engine anti-ice bleed air, customer bleed air, or by ingesting warmer than ambient air (either an external source or the engine bleed air) into the engine inlet. Care should be used in ingesting warmer than ambient air to ensure that the warm air is diffused in order to avoid possible engine surge.

(i) If it is not possible to attain a suitable variation in MGT by these methods, an acceptable, but more conservative, thermal limit correction may be obtained by allowing both shaft horsepower and MGT to vary at a stabilized flight condition and OAT.

(ii) The component temperature is plotted as a function of MGT, and the thermal limit correction from any test day MGT for any flight condition, to the MGT that would have existed with minimum specification engines on a hot day, is then applied to derive the final measured component temperature.

(4) In certain rare instances, it may not be required that the correction factor be applied to the full thermal limit capability of the engine. Consider the following example for the hot day hover IGE cooling test point at sea level.

	Power (SHP)	Corresponding MGT (°C)
Drive System Limit	900	---
Twin-Engine Hot Day Power Available	1050	750
Hot Day Power Required at Maximum G.W.	850	650
Engine Maximum Allowable MGT (Instrument Marking)	---	765
Test Day (90° F OAT) Parameters	850	600

(i) Notice that the installed hot day power available MGT from the engine performance program is 15° C cooler than the limit MGT (750 vs. 765° C), thus the

engine has 15° C “field margin” which would allow the engine temperature to gradually increase 15° C to maintain a given power as engine life is utilized. Secondly, the measured gas temperature corresponding to hot day power required at maximum gross weight is less than that corresponding to either the drive system limit or twin-engine hot day power available. Thus, the thermal limit correction could be applied from the test day MGT, 600° C, to the power required MGT plus the field margin, 650° C plus 15° C, rather than applying the correction factor to the full thermal capability of the engine, 765° C.

(ii) Care should be used in applying this relieving method, because as the hover altitude changes, the maximum gross weight and power required (and the associated MGT) will vary. The data must be corrected to at least the maximum MGT for a minimum specification engine that can occur in service at the flight condition under investigation.

AC 27.1045. § 27.1045 COOLING TEST PROCEDURES.

a. Explanation.

(1) Section 27.1045(a) requires that cooling tests be conducted for the rotorcraft in the configurations and under the conditions most critical for cooling.

(2) Section 27.1045(b) requires that a temperature be stabilized prior to start of a cooling test for any test rotorcraft and any test stage. This is to ensure that the system reaches the maximum temperature from which it must be cooled. Temperature stabilization is achieved when the rate of change is less than 2° F per minute. Therefore, for each test rotorcraft in each test phase, the temperature must be stabilized prior to entry into flight test. If temperature stabilization cannot be achieved as a normal result of the entry condition, then operation through the full entry condition must be accomplished prior to entry into the flight test segment being conducted. This allows the temperatures to reach their maximum natural levels prior to test initiation. Also, for each test rotorcraft during the takeoff stage of flight, the climb at takeoff power must be preceded by a hover during which temperature stabilization is achieved.

(3) Section 27.1045(c) requires that a test must be conducted for each flight stage until either the temperatures stabilize, the flight test stage is completed, or an operating limitation is reached.

b. Procedures.

(1) To comply with § 27.1045(a), an applicant typically submits a cooling test proposal to the FAA/AUTHORITY for approval. The proposal should encompass detailed procedures to demonstrate cooling capability for each critical rotorcraft configuration and test condition (test point). If a single-most critical test configuration and condition is not readily identifiable (which is usually the case), then a series of cooling tests must be conducted. Typical cooling test segments are climb, takeoff and

climb, various cruise speeds and altitudes, hover, shutdown after prolonged hover, and sling load cooling if a sling is used. Any other appropriate test conditions and procedures necessary to demonstrate adequate cooling for water, ground, flight, emergency, and shutdown conditions should be addressed in the test proposal. For multiengine rotorcraft (particularly in regard to transmission cooling), one test point that should be investigated is the point of highest multiengine mechanical power at the maximum ambient temperature. Other significant test conditions to be considered for multiengine rotorcraft are the OEI test conditions. The selection of all test points should be tempered with engineering judgment and should consider test points and procedures used on previous, similar rotorcraft certification work, if available.

(2) Compliance with § 27.1045(b) is typically shown by use of existing cockpit instrumentation or add-on test instrumentation from which temperature data are read prior to and during test segments. Test plans should clearly identify what is to be used and who is authorized to make and record readings and the accuracy and current calibration requirements for test instrumentation.

(3) Compliance with § 27.1045(c) is typically shown during FAA/AUTHORITY authorized testing by conducting each test segment until at least one of the three criteria (temperature stabilization, flight test segment completion, or an operating limitation) is reached. If an adverse operating limitation is reached, such as overheating, or the test cannot otherwise be successfully completed, then compliance has not been shown and a reevaluation is required.

AC 27.1045A. <u>§ 27.1045 (Amendment 27-23) COOLING TEST PROCEDURES</u>.

a. <u>Explanation</u>. Amendment 27-23 clarifies acceptance criteria for the powerplant cooling tests that are appropriate if, during the cooling test, component temperatures peak and then decline rather than stabilize. In these instances, the previous requirement to continue the test until “stabilization” occurred was unduly restrictive and was eliminated.

b. <u>Procedures</u>. All of the policy material pertaining to this section remains in effect except that the engine fluid temperatures do not have to stabilize.
Paragraph AC 27.1045 currently lists three criteria for test completion: temperature stabilization, flight test segment completion, or an operation limitation. With Amendment 27-23, a fourth criteria for test completion is: 5 minutes after the peak temperature is reached, the test can be considered complete.

SUBPART E - POWERPLANT

INDUCTION SYSTEM

AC 27.1091. § 27.1091 (Amendment 27-2) AIR INDUCTION.

a. Explanation.

(1) The air induction system for each engine should be of a configuration to supply the air required under the operating conditions for which certification is required.

(2) The intake system shall be designed such that if a backfire flame occurs, it will emerge outside the engine compartment cowling.

(3) Where required in the induction system, drains must be provided which discharge clear of the rotorcraft and out of the path of exhaust flames.

(4) For rotorcraft powered by a turbine, the inlets should be located or protected to minimize foreign object ingestion as defined in the regulation. The inlets must be protected during takeoff, landing, and taxiing. There must also be means to prevent leakage of hazardous amounts of flammable fluids from entering the engine intake system.

b. Procedures.

(1) For turbine-engine installation, the induction system should supply air of suitable quality to meet the installation requirements of the engine manufacturers. The installation requirements should be met throughout the operating envelope of the rotorcraft. In addition, the design and location of the air induction system should prevent accumulations of rain or hail, either external or internal to the induction system, that could adversely affect engine operation.

(2) The inlet design should account for the prevention of hazardous fluids entering the engine. Some designs will have inlet ducts which are free from any fluid lines; however, other designs may route the engine inlet air through a compartment which has flammable fluid lines. When the condition exists, test demonstrations of critical leakage during operations have been used to substantiate the installation. The fluid leakage may not have an adverse effect on engine operation.

(3) The air induction system design should also account for and minimize the possibility of foreign matter ingestion during takeoff, landing, and taxiing.

(4) For reciprocating engine installations, the induction system should supply air of suitable quality and quantity to the carburetor inlet of the engine. The condition of the air at the entering face of the carburetor is extremely important. For proper

operation, it is essential that the airflow be smooth, uniform, clean, and unrestricted throughout the very wide range of horsepower expected from the engine.

AC 27.1091A. § 27.1091 (Amendment 27-23) AIR INDUCTION.

a. Explanation. Amendment 27-23 removed § 27.1091(d) since the specific test defined by this paragraph was not critical for certain rotorcraft. The turbine inlet foreign-object-ingestion protection provided by § 27.1091(d) is adequately evaluated by existing requirements in § 27.1091(e)(2).

b. Procedures. This rule change did not change the current suggested methods of compliance.

AC 27.1093. § 27.1093 (Amendment 27-20) INDUCTION SYSTEM ICING PROTECTION.

a. Reciprocating Engines.

(1) Explanation.

(i) Atmospheric moisture, even in clean air and temperatures above freezing, can result in ice accumulations in induction systems to a degree which can easily cause engine failure.

(A) Impact Ice. This forms as supercooled water droplets impact on engine induction system components. Particularly heavy accumulations must be expected where bends or turns in the induction system force changes in the airflow direction thus centrifuging the droplets out of the air stream where they freeze on impact with induction system components. A serious form of impact ice is the collection of ice on fuel metering elements of the carburetor, the alternate (preheat) valve, and any screens in the system.

(B) Throttle Ice. This type of ice forms at or near the throttle in a partly closed position (up to 30° F) due to cooling effect resulting from the increase in kinetic energy (increased velocity) of the air in the restricted flow area.

(C) Refrigeration Ice. This forms as a result of the cooling effect of the fuel evaporating after the fuel is introduced into the airstream. For some float type carburetors, it is possible in rare instances to accumulate serious ice during a closed throttle glide with ambient air temperatures as high as 93° F and relative humidity of 30 percent. At low cruise power, ice can occur at outside air temperatures as high as 62° F and relative humidities as low as 60 percent. Most of the heat necessary to evaporate fuel is supplied from the air as it drops in temperature. Fuel evaporation ice can affect airflow by blocking the throat of the manifold riser; it can affect the fuel-air-ratio by interfering with the fuel flow; and it can affect mixture distribution or quantity of mixture flowing to individual cylinders by upsetting the fuel flow distribution,

or quantity of mixture flowing to individual cylinders by upsetting the fuel flow distribution at the fuel nozzle or airflow distribution in the manifold throat. This refrigeration phenomenon is the most serious of all factors causing carburetor ice.

(2) Procedures. Normally, flight tests with carburetor air temperature instrumentation are required. Unless otherwise justified, conduct all tests at maximum gross weight, a median center of gravity, in level flight, and at the engine speed which, considering cooling fan effects, if any, produces the minimum heat to the carburetor muff or engine component area utilized to provide the carburetor air heat. The optimum test condition is flight at the altitude at which the measured OAT is 30° F and a power setting of 75 percent maximum continuous power can be maintained. If this combination cannot be achieved, satisfactory interpolation of data from other test conditions can be achieved using the methodology of AC 23-8A, Flight Test Guide for Certification of Part 23 Airplanes.

(i) In addition to the preheat requirements of § 27.1093(a)(1), (a)(3), and (a)(4), the design should consider the possibility of impact ice (supercooled droplets below freezing) on engine air inlet components opening into the airstream. However, normal practice is to provide a crew selectable, sheltered, alternate engine air intake arrangement which, by inspection can be determined to be free from impact ice accumulations. Typically, a sheltered alternate air source would be acceptable if the opening is located inside the cowling out of the free airstream. However, precautions should be taken to ensure that backfire flames to be expected do not constitute a fire or explosion hazard.

(ii) For further information review AC 20-113, Pilot Precautions and Procedures to be Taken in Preventing Aircraft Reciprocating Engine Induction System and Fuel System Icing Problems, NACA TN 1790, NTSB AAS-72-1, DOT/FAA/CT 84/44 (1982) and NACA TN 1993 (1949).

b. Turbine Engines - Ice Protection.

(1) Explanation.

(i) This rule requires turbine engines and turbine-engine inlets to perform satisfactorily in atmospheric icing conditions defined in Appendix C of Part 25. On an equivalent safety basis, the limited icing envelopes described in paragraph AC 29.877 may be used to show compliance with the intent of the regulation if the rotorcraft is limited to not greater than a 10,000-foot pressure altitude for all operations. If operations are permitted above 10,000 feet, the Appendix C, Part 25, envelope must be used from 10,000 feet to the service ceiling or 22,000 feet. These possible equivalent safety approaches are not discussed herein. Compliance with the induction system icing protection rule is required regardless of flight manual limitations or restrictions against flight into atmospheric icing conditions.

(ii) In showing compliance with § 27.1093(b)(1)(i), the FAA/AUTHORITY has accepted the concept of limited exposure associated with escape from inadvertent ice encounters.

(A) Under the concept of limited exposure associated with escape from inadvertent ice encounters, it is presumed that there will be a flight manual limitation against flight into known icing, and that the engine induction system will be reevaluated if total aircraft ice protection certification is requested. Under this concept, the rotorcraft is assumed to fly directly through the icing environment; i.e., direct sequential penetration and straight line exit from both the continuous maximum and intermittent maximum icing clouds. Thus, the duration of exposure to the icing environment could be calculated by knowing the aircraft flight speed and cloud horizontal extent. A range of engine power and rotorcraft airspeeds should be evaluated to encompass the operating envelope of the rotorcraft. Note that aircraft speed has a pronounced effect (Ludlam effect) on ice accretion on small surface areas (inlet screens). A review of this phenomena may be found in National Research Council (Canada) Letter LT-92.

(B) When this limited exposure concept is used, the aircraft type certificate data sheet should clearly specify that the engine induction system must be reevaluated if certification to the general ice protection regulation, § 27.877 or § 27.1419, is requested. This direct penetration and exit approach is inappropriate for aircraft for which full icing clearance is requested (reference § 27.1419).

(iii) Engine induction system continuous icing protection would be necessary for aircraft for which full-icing clearance is requested (reference § 27.1419(d)). The approach is much preferred for all programs in order to reduce the scope of any eventual total aircraft icing program effort and to increase the safety level in conducting the rotorcraft natural icing tests. Since at least one rotorcraft has been FAA/AUTHORITY certificated to operate in known icing conditions and others have active development programs to this end, applicants should anticipate eventual full-icing clearance and consider that the engine induction system may be required to operate routinely in a continuous icing environment.

(iv) It is noted in paragraph AC 29.877 that some natural icing tests are required to show compliance with the overall rotorcraft ice protection requirements. It is not required that the engine induction system be evaluated as a part of that natural icing test if adequate verification has been shown by tunnel testing, analysis, or other means to ensure satisfactory operation in an extended continuous icing environment. If, however, subsequent rotorcraft natural icing testing shows unanticipated detrimental engine inlet effects, the inlet ice protection system should be reexamined.

(v) The regulation specifies the examination of flight idling conditions. This requirement is normally associated with a low-power letdown at the minimum practical forward airspeed. Alternatively, evaluation of the minimum power and minimum airspeed combination specified in the RFM for operation in visible moisture when below 40° F will accomplish the intent of the idling requirement.

(vi) An acceptable approach to a finding of compliance would be a combination of analysis of the performance of the ice protection system which covers the range of the applicable icing flight envelope (maximum altitude, minimum temperature, etc., of the basic rotorcraft) supported and validated by tests. Ideally, these tests would be conducted in natural atmospheric ice with special instrumentation for droplet size and liquid water content. In practice, however, natural icing testing may pose unacceptably severe problems since rotorcraft may not have the range and speed to reasonably find icing clouds and may not be equipped with the airframe and rotor ice protection needed for safety during the testing.

(vii) Problems with analysis emerge if engine inlets incorporate screens, turning vanes, sideward or upward openings, and edge or lip configurations which deviate from the airfoil shapes assumed in most of the analytical procedures described in current technical literature. The applicant should recognize that if meaningful analytical methods are not available, extensive testing with significant conservatism or possibly design changes may be required. Inlet screens in particular, if not adequately heated, fall in this category and can only be accepted if shown by very conservative ice testing to not significantly impede airflow to the engine.

(viii) The icing evaluation should definitely include some test points or other adequate evaluation of flight at ambient temperatures several degrees Fahrenheit above freezing and with very high water content. This condition has actually produced multiengine flameouts in in-service aircraft. The actual icing phenomena involved is not fully understood and in some instances efforts to duplicate the phenomena in icing tunnels were unsuccessful. Usually this condition does not produce rotor icing; therefore, actual flight testing using special precautions to ensure safe autorotation landings or engine relight capability may be needed to identify this condition.

(2) Procedures.

(i) Review paragraph AC 29.877, ADS-4, Report No. FAA-RD-77-767; Aircraft Icing Handbook, FAA Technical Report No. DOT/FAA/CT-88/8, and Advisory Circular 20-73, Aircraft Ice Protection. (The comparative concept described under Item 34 of AC 20-73 is obsolete and should not be considered.) These data provide extensive description and methodology for evaluation of ice protection systems; however, as noted above, these data generally apply to near straight line droplet trajectory with impingement onto conventional airfoil shaped inlets. As such, the applicability of these data to rotorcraft engine inlet ducts is limited and may require extensive adjustment to accommodate the different inflow trajectories and shapes of rotorcraft.

(ii) An analysis, appropriate to the configuration; i.e., heated or unheated impingement surfaces, should be prepared. To be acceptable, this analysis should show the inlet to be adequately protected by heat, or if unheated, to show that the inlet

with ice accretions as predicted, will provide adequate airflow to the engine throughout the flight envelope of the rotorcraft.

(A) For heated surfaces, ADS-4 and Report No. FAA-RD-77-76 provide detailed suggestions on heat transfer analysis particularly applicable to bleed air heated inlet lips formed in airfoil shapes. These data are limited in applicability and may not be useful for analyzing engine inlet water droplet trajectories to be expected at low airspeed and high engine airflow. Actual icing tests may be needed to derive the impingement patterns for these conditions.

(1) Acceptability criteria for heated inlet ducts usually require sufficient heat to evaporate the water to be expected in a “continuous maximum” icing cloud and to anti-ice the duct during flight in “intermittent maximum” icing clouds, providing the run-back and refreeze to be expected does not cause additional airflow disruption or damage to the engine. Full-scale inlet icing tests with the engine installed and operating should be conducted to verify the analysis. Engine power changes which may be expected in service should be included in the testing. Wind tunnels equipped for icing tests probably are the most useful means of conducting these tests if natural icing tests are impractical. The rotor downwash effect should be considered to the extent possible by adjusting the inflow angle in the tunnel.

(2) The power loss (bleed air, generator load, etc.) attributable to the heating requirements will affect the performance of the rotorcraft. Normally, this may be accounted for by specifying a gross weight incremental deduction from the flight manual performance data for flight into visible moisture below 40° F.

(3) Special evaluation of the possibility of ice ingestion damage to the engine should be made for heated systems which considers the ice ingestion to be expected when the anti-ice system is actuated after a delay of 1 minute for the pilot to recognize that the rotorcraft has encountered ice. This time delay may be reduced if the crew is provided adequate distinctive cues to alert them that the rotorcraft has encountered icing conditions.

(B) For unheated inlets, an acceptable method for showing compliance would include an extensive, detailed analysis (which shows that ice accretions on and in the inlet do not seriously obstruct adequate airflow to the engine) and tests as necessary to validate the analysis. The analysis of ice accretion becomes even more questionable since the unheated inlet involves ice buildups which themselves progressively change shape during icing exposure.

(1) Flight testing with an instrumented rotorcraft in natural ice to verify the analysis is desirable; however, wind tunnel tests as discussed above may be used. Since unheated inlets typically continue to accrete ice as a function of exposure, both the analysis and the test should realistically consider the actual exposure to be expected in service. This should not be less than penetration of the continuous maximum icing cloud followed immediately by exposure to the intermittent maximum

cloud for rotorcraft not certified for icing. Engine power changes which may be expected in service should be included in the testing, and a warm-up period at the conclusion of the icing exposure should be shown for some selected test points to evaluate potential ice breakaway and ingestion.

(2) For the nonicing certified rotorcraft using the limited icing exposure concept for inlet certification, some conservatism should be applied to account for the fact that inlet icing may occur without airframe icing, and that the escape procedure from this unapproved operating condition is not defined. A demonstration of 30-minute hold capability in the continuous maximum cloud would be acceptable. Alternatively, if positive cues (perhaps a carefully located ice detector) of potential inlet icing are provided to the crew, the time increment could be reduced to recognition plus 15 minutes (15-minute escape time after recognition is consistent with the single ice protection system failure recognition and escape guidance for aircraft ice protection systems in paragraph AC 29.877). It should not be assumed that airframe icing will always be available as a cue to potential inlet icing. The main rotor, for example, may not show icing indications above 25° F, whereas some inlets may ice critically near 32° F ambient. A reduction of the acceptable 30-minute exposure should not be based on observation of ice accretions on protruding components which are likely to be changed. For example, a limited exposure inlet icing program which reduces the inlet icing exposure time based on crew recognition of icing on the windshield wipers may be invalidated at a later date if a new windscreen deletes the wipers.

(iii) Inlet capability during IGE hover in icing conditions has not generally been considered for rotorcraft not certified for icing. However, the FAA/AUTHORITY is recently aware that some inlets may ice at zero airspeed near 32° F with no indications of airframe icing in the field of view of the crew. This special concern of operating within RFM limitations, and yet placing the induction system in jeopardy, may be addressed in several ways. If the induction system ice protection scheme is not dependent on airspeed for proper function, the issue may be addressed by tunnel testing with inlet airflows approximating hover with no particular attention to tunnel windspeed. For protection schemes which may be sensitive to airspeed (external screens have shown this tendency), actual hover demonstration at or near zero speed tunnel conditions may be appropriate. Icing detectors located to indicate induction system icing in hover may be an option to a hover icing protection demonstration. Recently, on an external screened configuration, the FAA/AUTHORITY has accepted a satisfactory IGE hover demonstration of 30 minutes at the critical ambient temperature (i.e., ambient consistent with no airframe icing but potential inlet icing), 0.6 grams/meter^3 LWC, and 40-micron droplet size as an adequate response to this concern.

(iv) For aircraft requesting full icing approval, or for those electing to show continuous induction system icing protection, the forward flight icing exposure would not be less than that time required to stabilize any ice accretions observed during repeated cycles of the continuous maximum followed by intermittent maximum cloud exposure. Typically, any ice accretions resulting from these repeated cycles would be expected to stabilize in less than 30 minutes. The 30-minute hold capability in the continuous

maximum icing environment could thus be ensured without special testing by careful selection of the test points for this repeated cycle.

(v) A rotorcraft requesting full icing approval should also have hover capability in the icing environment. Intermittent maximum icing conditions are not likely to exist near ground level and a satisfactory demonstration could involve the ability to hover indefinitely in the continuous maximum icing environment. Alternatively, carefully worded RFM limitations to restrict hover time may be acceptable if the system is not capable of indefinite exposure. Hover capability verification may not involve zero airspeed demonstration if the inlet protection system is insensitive to rotorcraft airspeed.

(vi) The engine(s) must be installed or protected to avoid engine damage from ice ingestion due to ice accretion in the inlet or on other parts of the rotorcraft, including the rotors, which may break away to enter the inlet. If screens or bypass arrangements are provided for these purposes, they should be included in the icing tests and shown by test or rational analysis to effectively protect the engine.

(vii) For unheated inlets, significant ice accumulations to be expected on the inlet may adversely affect the engine stall margin, acceleration characteristics, duct loss, etc. Dry air flight tests to evaluate these aspects can be accomplished by affixing ice shapes to the inlet. These shapes should closely match the actual ice shapes defined by test or analysis. In addition, it should be determined that ice shedding into the engine inlet either during continued flight into icing conditions or after emerging from the icing environment does not damage engine compressor on other inlet components.

c. Turbine Engines - Snow Protection.

(1) Explanation.

(i) Section 27.1093(b)(1)(ii) provides that the turbine engine and its air inlet system operate satisfactorily within the limitations established for the rotorcraft, in both falling and blowing snow. The section does not provide the definition of falling and blowing snow.

(ii) Since the regulation provides for certification “within the limitations established for the rotorcraft,” the FAA/AUTHORITY can accept a restriction against snow operations in the limitations section of the RFM in lieu of demonstration of compliance. If no restriction on snow operations appears in the RFM, it is presumed that the aircraft may operate in snow at the pilot’s discretion.

(2) Acceptance Criteria.

(i) The FAA/AUTHORITY has accepted that engine induction system operation in falling and blowing snow can be approved without restriction if normal operations under the following conditions are demonstrated:

Visibility: one-quarter mile or less as limited by snow.

Temperature: 25° F to 34° F (28° F to 34° F desired), unless other temperatures are deemed critical.

Operations: Ground operations - 20 minutes
IGE hover - 5 minutes
Level flight - 1 hour
Descent and landing

(ii) RFM visibility restrictions for falling and blowing snow operations are not appropriate.

(iii) Time limitations, other than possibly for ground and hover operations, are not appropriate.

(iv) Artificially produced snow should not be used as the sole means of showing compliance.

(3) Rationale.

(i) The test conditions specified--visibility, temperature, and operations--are based on previous certification programs, previous FAA/AUTHORITY guidance, and on research by the FAA technical center and others.

(A) Visibility. The test visibility defined, 1/4-mile visibility or less as limited by snow, represents a heavy snowstorm and is the maximum likely to be encountered in service. Rotorcraft which have been certified to the 1/4-mile visibility test criteria have not shown engine inlet snow-related service difficulties. It is important to note that the visibility specified is a test parameter rather than an operational limitation to be imposed on the rotorcraft after the tests are completed.

(B) Temperature.

(1) The ambient temperature specified is conducive to wet snow conditions. Wet snow tends to accumulate on unheated surfaces subject to impingement.

(2) Colder ambients, more conducive to dry snow conditions, may be critical for some induction systems. Colder exterior surfaces may be bypassed, and the snow crystals may stick to partially heated interior surfaces where partial melting and refreezing may occur.

(3) Company development testing or experience with very similar type induction systems may be adequate to determine the critical ambient conditions for certification testing.

(C) Operations.

(1) Ground running, taxiing, and IGE hover operations are generally the most critical since the rotorcraft may be operating in recirculating snow. Twenty-five minutes under these extreme conditions would seem a reasonable maximum, both from the view of pilot stress and the maximum expected taxi time prior to takeoff in bad weather.

(2) One hour of level flight operation under ¼-mile visibility snow conditions should provide ample opportunity for hazardous accumulations to begin to build.

(3) The descent and landing will provide an engine power change, an induction system airflow change, and a variation in the external airflow pattern near the induction system entrance. The initiation of the descent and final flare for landing may also produce additional airframe vibration transmitted to the induction system. These power, airflow, and vibration changes may provide an opportunity for any level flight accumulations to be ingested into the engine. Hazardous accumulations are not acceptable during or after any test phase.

(ii) Visibility may fluctuate rapidly in snowstorms. It is affected by the presence of fog or ice crystals, is not crew measured or controlled, and is difficult to estimate. A visibility operational limitation based on snow, therefore, is not appropriate.

(iii) Since during cruise in snow conditions the aircraft is likely to be in and out of heavy snowfall, it is not practical for the crew to account for the time spent in snow in level flight conditions. Thus, it is not appropriate to include time limitations in the RFM for level flight snow operations.

(iv) A practical ground and IGE hover time limitation of less than 25 minutes in recirculating snow may be considered. The expected action at the expiration of this specified time period would be shut down and inspection of the inlet system or transition to a safe flight condition where demonstration has shown that moisture accumulations will not intensify or shed and cause engine operational problems.

(v) Artificially produced snow is an excellent development tool and has been successfully used to indicate potential problem areas in induction systems. These devices are usually restricted to use for hover and ground evaluations, and the snow pellets produced by these machines are not sufficiently similar to natural snowflakes to justify the use of artificial snow as the sole basis of certification.

(4) Procedures.

(i) Satisfactory demonstration of the test conditions requires that the engine, induction system, and proximate cowling surfaces remain free of excessive snow, ice, or water accumulation. Excessive accumulation is defined as accumulation that may cause engine instability, damage, or significant loss of engine power. If a questionable amount of snow or moisture accumulates in the inlet, the applicant may elect to demonstrate that this amount in the form of snow or water and ice, as appropriate, can be ingested by the engine without incurring surge, flameout, or damage.

(ii) The conditions specified assume actual flight demonstration in natural snow. The ground operations and IGE hover test conditions assume operation in recirculating snow. Blowing snow, resulting from rotor airflow recirculation, can be expected to be more severe than natural blowing snow if the rotorcraft continues to move slowly over freshly fallen snow. Thus, the blowing snow operational capability is usually demonstrated by the taxi and hover operations in recirculating snow.

(iii) For VFR rotorcraft, the airspeeds for the level flight test condition should include the maximum consistent with the visibility conditions. For IFR operations, the airspeed should be the maximum cruise speed or the maximum speed specified for snow operations in the flight manual limitations, unless other airspeeds are deemed more critical. It is recognized that many rotorcraft initially VFR certified are later IFR certified with a resulting possible increase in airspeed in snow conditions. This factor should be considered if IFR certification is anticipated.

(iv) The visibility specified assumes that visual measurements are made in falling snow in the absence of fog or recirculating snow by an observer at the test site outside the tests rotorcraft's area of influence. An accepted equation for relating this measured visibility to snow concentration is $V = 374.9/C^{0.7734}$ where C is the snow concentration (grams/meter^3) and V is the visibility (meters).

(A) This equation can be reasonably applied to all snowflake type classifications and is credited to J.R. Stallabrass, National Research Council of Canada.

(B) Other equations may be applied if they are shown to be accurate for the particular snowflake types for the test program.

(v) The snow concentration corresponding to the 1/4-mile or less visibility prescribed will be extremely difficult to locate in nature. Data from Ottawa, Canada, research indicate that fewer than 4 percent of the snowstorms encountered there meet the 0.91 grams/m^3 concentration associated with the 1/4-mile visibility. Furthermore, the likelihood that the desired concentration will exist for the duration of the testing is even more remote. Because of these testing realities, it is very likely that exact target test conditions will not be achieved. Those involved in certification must exercise good judgment in accepting alternate approaches.

(vi) For some engine induction systems, it may become apparent by inspecting for moisture accumulations that ground and IGE hover operations in recirculating snow are much more severe than the level flight test. In this instance, it is reasonable to accept prolonged IGE operations in recirculating snow and to accept durations of less than 1-hour level flight in 1/4-mile or less visibility. Best efforts should be made to ensure that at least some level flight time is accomplished at 1/4-mile or less visibility to ensure that the spectrum is covered.

(vii) It should be determined that the visibility established at the test sight is limited by snow and not by fog or poor lighting (twilight) conditions.

(viii) The concentration of snow approaching the inlet in severe recirculation will far exceed the quantity encountered in the natural snowfall. Recirculation is necessarily a qualitative judgment by the test pilot. The snow concentration at the inlets during recirculation would vary for different rotorcraft types and would be dependent on rotor characteristics, power setting, and inlet location. For test purposes, recirculation should be the highest snow concentration attainable in the maneuver, or that corresponding to the lowest visibility at which (in the pilot's judgment) control of the rotorcraft is possible in the IGE condition. The 1/4-mile or less visibility specification outside of the recirculation influence becomes inconsequential provided that fresh, loose snow is continually experienced during the ground operation and IGE hover testing phase. However, since it is intended that the test phases be accomplished sequentially to ensure that transition to takeoff and other transients are considered, the conditions at takeoff, level flight, and descent and landing should approximate the 1/4-mile visibility criteria.

d. Turbine Engines - Ground Icing.

(1) Explanation. This requirement addresses the situation where extended ground operation in icing exposes the rotorcraft and its engine inlet to icing (ground fog) conditions which may have different droplet impingement patterns and involve different and/or less effective means of ice protection. Note that the requirement is effective in Amendment 10 and is applicable regardless of any desire to prohibit dispatch into known icing conditions.

(2) Procedure. Since this condition assumes zero airspeed, wind tunnel testing may be inappropriate unless conservative extrapolation of low speed tunnel data can be determined to be valid. For protection schemes which are dependent primarily on airspeed for proper functions (external screens have shown this tendency), it may be necessary to verify adequate ground operation protection capability by very low speed tunnels or by the use of outside facilities such as the Canadian National Research Council's spray rig at Ottawa, Canada. For heated systems or for internal bypass schemes, tunnel speed may not be important, and adequate demonstration may be accomplished at higher tunnel speeds provided that internal inlet airflows and heat available are properly considered. Testing should proximate the regulatory test conditions and be continued for 30 minutes using engine power and control

manipulation as normally accepted during taxiway operations, followed by an acceleration to takeoff power. The test time may be shortened if deice/anti-ice protection is adequate or if stabilization of ice build-up is affirmed. The induction system should be in condition for safe flight at the conclusion of the test.

e. § 27.1093(c) Supercharged Reciprocating Engines.

(1) Explanation. This rule authorizes the designer to take credit for the heat-of-compression available downstream of an engine air inlet supercharger to meet the induction system heat rise requirements of § 27.1093(a)(3) or (a)(4), provided the heat rise is automatically available for the applicable altitude and operating condition.

(2) Procedures. Since a wide variety of superchargers and supercharger controls (waste-gate controls) have been devised, it is impracticable to outline specific instructions for determining compliance. However, the certification engineer can properly evaluate the arrangement by analyzing the system for trends (in heat rise available) and conducting measurements to verify these trends and quantify the actual values of heat rise available. Some factors to be considered are:

(i) Mechanically driven superchargers for rotorcraft usually operate over a very narrow speed range, thus the heat of compression (Δ temperature) may remain constant over the altitude range. Conversely, turbosuperchargers usually are controlled (via waste-gate position modulation) to gradually increase the compression with increase in altitude, thus the critical (or lowest) Δ temperature may be available at very low altitudes.

(ii) Other waste-gate controllers sense carburetor deck pressure and respond by modulating the waste gate to maintain a constant carburetor deck pressure within the capabilities of the turbo unit. Heat of compression may then vary with altitude and engine power in a complicated fashion such as to require experimental temperature measurements across a wide range of operating conditions to determine compliance.

(iii) Turbosuperchargers which are not controlled (by waste-gate modulation) but respond to an orificed exhaust generally will (at constant power) produce more heat rise at altitude than at sea level; however, size matching between engine and turbo unit may affect this. Instrumented flight tests should be used as a final compliance verification method.

AC 27.1093A. § 27.1093 (Amendment 27-23) INDUCTION SYSTEM ICING PROTECTION.

a. Explanation. Amendment 27-23 clarifies that the phrase, “within the limitations established for the rotorcraft” applies only to the requirement in § 27.1093(b)(1)(ii) for demonstrating flight in falling and blowing snow.

b. Procedures. All of the policy material for this section remains in effect with the update that turbine engines and turbine engine inlets should perform satisfactorily in atmospheric icing conditions defined in Appendix C of FAR 29 instead of FAR 25. In addition to the procedures of paragraph AC 27.1093, the following procedures should be followed:

(1) A “serious loss of power” in this section has been interpreted to be any power loss that requires immediate pilot action. In addition, the term “adverse effect on engine operation” in § 27.1093(b)(1)(ii) has been interpreted to be an effect that would prevent the engine from achieving rated aircraft flight manual performance (takeoff/climb/etc.). This term also includes effects on the engine induction system characteristics to an acceptable level established by the engine manufacturer (inlet distortion, etc.).

(2) It should be shown that rotorcraft that are prohibited from flight into falling and blowing snow can exit inadvertent entrance into those conditions without adverse effect upon the operating characteristics of the engine or the rotorcraft.

(3) For full flight capability into snow, both falling and blowing, it should be shown that each engine, and its inlet system, will operate satisfactorily throughout the flight power range of the engine and the operating limitations of the rotorcraft. It should be shown that any build-up or accumulation of snow will not reduce or block the flow of inlet air to the engine. Any accumulations that become dislodged should not affect engine operation.

SUBPART E - POWERPLANT

EXHAUST SYSTEM

AC 27.1121. § 27.1121 (Amendment 27-12) EXHAUST SYSTEM--GENERAL.

a. Explanation.

(1) This section addresses the arrangement of exhaust components and the protection against hazardous conditions which exist with hot exhaust gases.

(2) The objective is to allow for thermal expansion of manifolds and pipes, prevent local hot spots, and eliminate the possibility of igniting flammable fluids or vapors.

b. Procedures.

(1) Sufficient clearance of hot exhaust components must be maintained from structure, fuel cells, flammable fluid lines, and electrical components to compensate for thermal growth under normal and most extreme operating temperatures. Verify that adequate clearance exists between the exhaust system components and the surrounding structure, and that no interference occurs under the most adverse temperature excursions.

(2) Hot spots that can occur on fuselage or rotor blade skin as a result of impingement or in compartments due to an accumulation of hot gases should be eliminated with deflectors or by providing adequate flow-through ventilation. Compliance may be shown by demonstration or analysis.

(3) It should not be possible to ingest sufficient quantities of exhaust gases which will produce engine surges, stalls, or flameouts during normal and emergency operation within the range of operating limitations of the aircraft and of the engine. Analysis and/or flight testing may be required to demonstrate compliance. If flight testing is required, particular attention should be placed upon critical azimuths and wind conditions.

(4) Exhaust system surfaces hot enough to ignite flammable fluids or vapors must meet the isolation or shielding requirements of this section in addition to the requirements of §§ 27.1183 and 27.1185. Good design practice suggests that the isolation and shielding features incorporated would continue to be effective under the emergency landing conditions specified in § 27.561.

(5) It should be demonstrated that exhaust gases are discharged in such a manner that they do not cause distortion or glare which seriously affects pilot visibility at

night. One method of compliance would be a night flight evaluation at critical azimuths and variable wind conditions to verify that no degradation exists.

(6) Compliance with § 27.1121(f) can be accomplished by ensuring that the drain will discharge positively and is a minimum of 0.25 inches in diameter. No drain may discharge where it might cause a fire hazard. This can be demonstrated by discharging a colored liquid through the drain system in flight and on the ground. The dye should not impinge on any ignition source.

(7) Section 27.1121(g) is self-explanatory in specifying that a means must be provided to prevent blockage of the exhaust port after any internal heat exchanger failure. Compliance can be shown by demonstration or by analysis. In either case, it must be shown that any internal failure will not result in a significant power loss from the engine.

AC 27.1123. § 27.1123 (Amendment 27-11) EXHAUST PIPING.

a. Explanation. This section contains the following requirements that must be met for proper certification of exhaust piping on engines, auxiliary propulsion units (APU), and other similar devices.

(1) Section 27.1123(a) requires that the piping be heat and corrosion resistant so that it performs its intended function during its operational life (either the life of the rotorcraft or a specified limited life) without significant metal corrosion, metal erosion, or creation of hazardous hot spots. The piping system should be designed, have an installation design, or a combination that allows performance of its function without thermal expansion (thermal strain) induced structural failures such as ruptures caused by operating temperature excursions and overpressurization during its operational life.

(2) Section 27.1123(b) requires that the piping be supported to withstand the vibration and loading environment (including inertia loads) to which it will be subjected in service.

(3) Section 27.1123(c) requires that piping that connects to components between which relative motion exists in service must have the necessary flexibility and structural integrity to withstand the relative motion without exceeding limit load (at the maximum operating temperature) of the piping, or creating unintended loads (or load paths) on the components to which the piping connects.

b. Procedures. Exhaust piping is typically certified by analysis and installation tests conducted during the basic certification process, including flight tests, as follows:

(1) For compliance with § 27.1123(a), because of its durability in the hot exhaust environment, exhaust piping is typically made from stainless steel or alloy steel of the appropriate structurally and thermally derived wall thickness. Hot aircraft exhaust gases are very corrosive; thus, proper material selection and corrosion protective

design should be performed and validated during certification. Advisory Circular (AC) 43-4, “Corrosion Control for Aircraft” contains a detailed discussion of exhaust gas corrosion problems. Analysis and/or verification tests of the exhaust system should be conducted. This work is necessary to ensure thermal and structural integrity; to ensure that thermal expansion does not cause a structural overload or failure; and, to ensure that exhaust piping does not contact (or come close to) ambient temperature materials (such as structure or system components). Hot exhaust piping in contact with (or close to) ambient temperature materials can either create a fire hazard or cause an unintended strength reduction. To ensure that thermal expansion analyses and tests are properly conducted, the maximum in-service temperature excursion should be properly defined. The maximum temperature excursion should be based on the maximum temperatures of the piping and exhaust gases, as affected by the insulatory characteristics of the piping’s enclosure, and as affected by a worst case hot day. The worst case temperature environment used for analysis can be verified by a temperature survey. If run on cooler days, the survey can be adjusted for the worst case hot day environment using methods identical to those used for engine cooling tests (reference paragraph AC 27.1043, Cooling Tests). The piping should be designed to expand freely so that thermal expansion (thermal strain) induced loads on the piping and its restraint system are minimized. If thermal expansion induced loads (in conjunction with deflection induced loads and exhaust flow loads, discussed in b(4)) are significant relative to the limit load of any item in the load path, then a fatigue check on the critical design point(s) should be performed. The fatigue check should establish a safe life or an approved limited life for the critical component(s) in the system. An accurate analytical fatigue check on exhaust piping may be difficult to perform because of in-service erosion, corrosion, etc.; therefore, phased inspections should be considered to ensure the continued airworthiness of the exhaust piping.

(2) For compliance with § 27.1123(b), exhaust piping should be properly supported so that the maximum loads anticipated in-service are properly distributed and reacted, and as previously discussed, so that thermal expansion induced loading is minimized. Typically the worst case static design load conditions are either the inertia loads from an emergency impact (reference § 27.561) or the combined loading from thermal expansion, in-flight deflections and internal exhaust gas flow (see paragraph b(4)). It should be noted that several combinations of these loads should be examined to determine the critical combination. The piping should be supported and restrained such that critical frequencies are avoided and the induced vibration environment’s effect is minimized. Flight test vibration surveys may be necessary, in some cases, to properly define or validate the critical modes and environment and their effect on the exhaust piping design. Operating modes such as ground idle, flight idle, 40 percent and 80 percent of maximum continuous power, maximum continuous power, OEI power settings and other power settings should be investigated to determine their vibratory effect on the exhaust gas piping system. The strength reduction of the piping materials at operating temperature (and at worst case temperature) should be properly considered in the design and structural substantiation. MIL-HDBK-5D contains material allowables versus temperature data for a wide variety of metallic engineering materials.

(3) For compliance with § 27.1123(c), the piping and its restraint system should be designed to minimize loading induced on the piping by the relative motion (in-service deflections) of the components to which the system attaches. Isolation of significant deflection induced loading (if required based on analysis and strain surveys) by use of flexible joints or other equivalent devices or designs should be considered. Any such in-line device used to reduce deflection loading should be fireproof and leak free when performing its intended function.

(4) For critical load case determination, the expansion induced thermal loading should be added in with mechanical relative motion induced loads and internal exhaust gas flow loads to provide total critical load for both a proper static and a proper fatigue structural substantiation. The critical combined static load should be compared with the emergency impact loads of § 29.561(paragraph b(2)) to determine the critical design load case for static strength substantiation.

(5) It should be noted that the majority of the exhaust piping verification testing required for certification can be accomplished during the rotor drive system tie down testing of § 27.923.

SUBPART E - POWERPLANT

POWERPLANT CONTROLS AND ACCESSORIES

AC 27.1141. § 27.1141 (Amendment 27-12) POWERPLANT CONTROLS: GENERAL.

a. Explanation.

(1) Section 27.1141(a) references §§ 27.777 and 27.1555. The detailed compliance procedures for powerplant controls arrangement and markings are found in these sections.

(2) Each flexible powerplant control should be approved.

(3) In order to prevent power failure due to improper powerplant control valve positioning, § 27.1141(c) specifies acceptable open/closed positions for manual valves. Power-assisted valves should have means to indicate to the flightcrew that the valve is either in the fully open or fully closed position or that the valve is moving between these two positions.

(4) For turbine installations, no single failure or malfunction, or probable combination thereof, of any powerplant control system should cause the failure of any powerplant function necessary for safety.

b. Procedures.

(1) Procedures for § 27.1141(a) are contained in detail in §§ 27.777 and 27.1555.

(2) Compliance with § 27.1141(b) may be accomplished by qualifying the control to Mil-C-7958, “Controls, Push-Pull, Flexible, and Rigid,” or other approved standards.

(3) Compliance with § 27.1141(c)(1) may be accomplished by installing manual valves which have positive stops in the full open and closed positions. The fuel valves, however, may have an arrangement to facilitate the capability of switching to different fuel tanks if suitable indexing is provided. Compliance with paragraph (c)(2) may be accomplished by installing a device which displays to the flightcrew one indication with valve fully open and another with the valve fully closed. Alternatively, an indication could be given when the valve is moving from fully open to fully closed with the indication ceasing when the valve position corresponds to the selected switch position (open or closed). An example would be a light that is off when the valve is fully open or closed and illuminates while the valve is transitioning.

(4) Compliance with § 27.1141(d) can be accomplished by performing a failure mode and effects analysis (FMEA) to determine that no single failure or malfunction will cause failure of any powerplant control function necessary for safety. Included in this FMEA should be calculations showing the likelihood of any combination of failures of the powerplant control systems that would cause failure of any powerplant function necessary for safety is improbable. One acceptable procedure for documenting the analysis is contained in Society of Automotive Engineers (SAE) Fault/Failure Analysis Procedure ARP 926A, revised November 15, 1979.

AC 27.1141A. § 27.1141 (Amendment 27-23) POWERPLANT CONTROLS: GENERAL.

a. Explanation. Amendment 27-23 changed § 27.1141(c) to extend its applicability to any powerplant valve regardless of the location of the valve control. The previous rule was only applicable for valves in the cockpit. Valves are excluded if their function is not required for safety.

b. Procedures. This rule change did not change the suggested methods of compliance.

AC 27.1143. § 27.1143 (Amendment 27-11) ENGINE CONTROLS.

a. Explanation. This regulation describes the arrangement and operation of the engine controls.

(1) Each throttle mechanism should be independent of the throttles for other engines.

(2) The arrangement of the independent throttles should allow simultaneous control of all engines with one hand.

(3) Immediate actuation at the engine control should be provided by any given input at the throttle control in the cockpit.

(4) If throttle controls incorporate a fuel shut-off feature, a means should be provided to prevent inadvertent movement to the shut-off position. This means should--

(i) Provide a positive lock or stop at the idle position. An idle detent (mechanical or electrical/mechanical such as solenoid) is an accepted arrangement.

(ii) Require a separate and distinct operation to place the control in the shut-off position. Separate action (switch or button) to displace the idle stop or distinct offsets in throttle motion to allow movement from the idle stop to shutoff are accepted arrangements.

b. Procedures. None.

AC 27.1143A. § 27.1143 (Amendment 27-23) ENGINE CONTROLS.

a. Explanation. Amendment 27-23 revises § 27.1143 by replacing the terms "throttle control" and "thrust control" with the more general term "power control." The changes should preclude misconceptions regarding engine control arrangements when governor-controlled turboshaft engines are employed in rotorcraft.

b. Procedures.

(1) Proper operation of the power control functions should be verified as part of the Type Inspection Authorization (TIA).

(2) Compliance with § 27.1143(d)(1) has been shown successfully in the past by using idle detentes (mechanical or electrical/mechanical, such as a solenoid).

(3) Compliance with § 27.1143(d)(2) has been achieved by using a switch or button to displace the idle stop. Distinct offsets in throttle motion to allow movement from the idle stop to shutoff have also been used to show compliance.

AC 27.1143B. § 27.1143 (Amendment 27-29) ENGINE CONTROLS.

a. Explanation. Amendment 27-29 introduced the option of using 30-second/2-minute OEI power ratings to multiengine rotorcraft. This amendment revises § 27.1143 by adding the requirement for automatic control of 30-second OEI limits in the new § 27.1143(e). Automatic control of the 30-second OEI limits are required to prevent exceeding the remaining power sections OEI limits after the precautionary shutdown of one engine. The use of 30-second OEI power must be limited to emergency use only during flight conditions where one engine has failed or has been shutdown for precautionary reasons. During this critical stage of flight, crew attention should not be focused on powerplant instruments to avoid exceeding the limit.

b. Procedures. The automatic controls used to prevent 30-second OEI limit exceedances can be installed on the airframe or the engine. The applicant should demonstrate that 30-second OEI limits that can affect the continued operation of the drive system or engine such as gas generator speed, power turbine speed, measured gas temperature, torque, etc., cannot be exceeded. It should also be shown that these devices do not restrict the ability to achieve the full 30-second OEI limits. The operation of these limit devices can be demonstrated on the aircraft or if possible by using bench tests.

AC 27.1145. § 27.1145 (Amendment 27-12) IGNITION SWITCHES.

a. Explanation.

(1) This section addresses the arrangement and protection of ignition switches for reciprocating engines or for turbine engines which require continuous ignition.

(2) The objective is to provide a means to quickly shut off all ignition, if required, while at the same time providing protection against inadvertent ignition switch operation.

(3) Section 27.1145(a) does not specifically state that turbine engines which do not require continuous ignition are excluded from the rule, but no benefit is realized by the capability of shutting off all ignition to these engines.

b. Procedures.

(1) Section 27.1145(a) is self-explanatory in specifying that a means be available to quickly shut off all ignition by the grouping of switches or by a master ignition switch control. A “T” arrangement or split rocker switches are possible configurations. A master ignition control, if utilized, would need to be carefully evaluated if rotorcraft performance credit is given for engine isolation.

(2) Each group of ignition switches and the master ignition control should have a means to prevent inadvertent operation. “Guarded” switches are the usual means of showing compliance.

AC 27.1147. § 27.1147 MIXTURE CONTROLS.

a. Explanation. This section addresses the arrangement of fuel mixture controls for reciprocating engine installations and applies only if mixture controls are installed. Note that this control, as used in rotorcraft, is an engine shutdown device. Adjustment of the fuel mixture in flight is not allowed to demonstrate Part 27 compliance, but may be acceptable for more efficient engine operation if suitable stops or automatic means are provided to prevent inadvertent engine shutdown with mixture movement or engine malfunction with flight condition changes.

b. Procedures.

(1) The arrangement should allow--

(i) Separate control of each engine; and

(ii) Simultaneous control of all engines.

(2) Compliance may be accomplished by a side-by-side arrangement of the controls to allow either separate or simultaneous control.

AC 27.1151. § 27.1151 (Amendment 27-33) ROTOR BRAKE CONTROLS.

a. Explanation.

(1) Amendment 27-33 added a new § 27.1151 that establishes requirements for rotor brake controls. Paragraph a is intended to require design features which, for all practicable purposes, prevent inadvertent brake application in flight even under conditions of reasonably expected crew error or confusion.

(2) Paragraph b requires warning devices to alert the crew if the brake has not been completely released.

b. Background. Inadvertent or undetected application of the rotor brake may be expected to result in excessive heat and fire in the rotor brake area. Rotor brake components are usually located integral with, or in close proximity to, rotor drive system components and, in some cases, close to critical hydraulic main rotor control system components. Fires in these areas would be extremely hazardous.

c. Method of Compliance.

(1) For paragraph (a), literal compliance can be achieved by lock-out devices sensitive to the higher RPM range of the main rotor or other flight parameters, hydraulic bypass or lock-out devices controlled by flyweight governor systems, or engines control position, etc.

The guard required by FAR 27.921 does not, in itself, provide compliance with this requirement. However, if careful evaluation of the overall control, including location, guard mechanism, control manipulation requirements, accessibility, etc., provides a high degree of assurance that inadvertent application will not occur, compliance may be assumed. Also, if brake application does occur, annunciation appears and no immediate hazard to flight operation exists, compliance may be assumed.

(2) Alerting devices supplied to comply with this rule should provide a signal at any time the rotor brake is engaged, including partial engagement. This means to alert the crew could be:

- A warning light indicating the mechanical control position, or the position of the brake for a power assisted system, or

- An unambiguous device warning the crew that the rotor brake is engaged (or partially engaged), or

- A locking device preventing the engine starting when the rotor brake control is not completely released.

AC 27.1163. § 27.1163 (Amendment 27-23) POWERPLANT ACCESSORIES.

a. Explanation.

(1) This section addresses the interface requirements for powerplant accessories which are mounted on the engine or rotor drive system components.

(2) Areas which should be addressed include structural loads imposed upon the engine case and isolation between the accessory and engine oil systems. Electrical equipment isolation from flammable fluids or vapors should be addressed as well as the effect of an accessory failure on the continued operation of the engine and drive system components.

b. Procedures.

(1) Accessories installed and certified by the engine manufacturer can be mounted on the engine without additional justification.

(2) Any accessory to be mounted on the engine, which was not certificated with the engine, and does not meet the engine installation design manual requirements should have a structural analysis showing the mounting of that accessory on the engine will not induce loads into the engine case which are higher than the original design loads.

(3) When the accessory is mounted and operating on the engine, it should not be possible to contaminate either the engine or accessory oil systems. This contamination can take the form of debris following a failure, airborne dirt or water, or any other substance that would impair proper operation of the engine or accessory. Compliance with these requirements can be accomplished by a combination of test and analysis. The design interface should be such that when the equipment is operating, there are no high/low pressure differentials between the components which would induce fluid transfer between components resulting in a low fluid level in one component and an overfill condition in the other component. Where this potential exists, an analysis and/or test should be used to demonstrate compliance.

(4) Engine mounted accessories which are subject to arcing and sparking, must be isolated from all flammable fluids or vapors to minimize the probability of fire. This can be accomplished by isolating the electrical equipment from the flammable fumes or vapors or by isolating the flammable fumes or vapors from the potential ignition source. Compliance can be shown by analysis.

(5) A failure mode and effect analysis should be submitted which shows that a failure of any engine mounted and driven accessory will not interfere with the continued

operation of the engine. If a hazard is created by the continued rotation of an engine driven accessory after a failure or malfunction, provisions to stop its rotation or eliminate the hazard must be provided. The effectiveness of this device should be demonstrated by test.

(6) The main transmission and rotor drive system should be protected from excessive torque loads and damage imposed upon them by accessory drives. One method which has been used is a torque limiting device; (i.e., shear section of main rotor driveshaft). The effectiveness of any protection device should be demonstrated by test.

SUBPART E - POWERPLANT

POWERPLANT FIRE PROTECTION

AC 27.1183. § 27.1183 (Amendment 27-20) LINES, FITTINGS, AND COMPONENTS.

a. Explanation. This section requires that any line, fitting or other component of a flammable fluid, fuel or flammable gas system which carries, conveys, or contains the fluid or gas in any area subject to engine fire conditions (i.e., a severe fire) must be at least fire resistant (reference § 1.1 for definition of fire resistant and see paragraph AC 27.859 which defines a severe fire). An exception is for flammable fluid tanks and supports which are part of and attached to the engine or are in a designated fire zone. These items are required to either be fireproof (see § 1.1 for definition of fireproof and see paragraph AC 27.859 which defines a severe fire) or to be enclosed by a fireproof shield, unless fire damage to any non-fireproof part (e.g., secondary line or valve support) will not cause leakage of a flammable gas, flammable fluid or otherwise prevent continued safe flight and landing of the rotorcraft. All such components must be shielded, located, otherwise protected or a combination to safeguard against the ignition of leaking flammable fluids or gases. Integral oil sumps of less than 25 quarts capacity on a reciprocating engine need not be fireproof or enclosed by a fireproof shield; however, they should be fire resistant. Most integral sumps in this category are, by natural design and material selection, fire resistant. Exemptions to the preceding requirements are as follows:

(1) Lines, fittings and components already approved under Part 33 as part of the engine itself.

(2) Vent and drain lines (and their fittings) whose failure will not result in or add to an operational fire hazard. In addition, all flammable fluid drains and vents must discharge clear of the induction system air inlet and other obvious ignition hazards.

b. Procedures. A detailed review of the design should be conducted to identify and quantify all lines, fittings, and other components which carry flammable fluids and/or gases and are in areas subject to engine fire conditions such as engine compartments and other fire zones. Once these items are identified the design means of fire protection should be selected and validated, as necessary, during certification. For materials and devices that cannot be qualified as fireproof or fire resistant by similarity or by known material standards, testing to severe fire conditions (see paragraph AC 27.859 definition, AC 20-135, and AC 23-2 for detailed requirements) should be conducted on full-scale specimens or representative samples to establish their fireproof or fire resistance capabilities. Exceptions to these standards (as provided in the regulatory section) should be reviewed and approved/disapproved on a case-by-case basis during certification. Also, operational fire hazards from drains, vents, and other similar sources should be identified and eliminated during certification.

AC 27.1185. § 27.1185 (Amendment 27-11) FLAMMABLE FLUIDS.

a. Explanation. This section requires that fuel, flammable fluid, or vapor tanks, reservoirs or collectors be sufficiently isolated from engines, engine compartments, and other designated fire zones so that hazardous heat transfer from these areas to fuel, flammable fluid, and vapor tanks, reservoirs, or collectors is prevented in either normal or emergency service.

b. Definitions.

(1) Fuel or Flammable Fluid Collector. Any device such as a large valve, accumulator, or pump that contains a significant amount of flammable fluid, fuel, or vapor (e.g., the volume equal to 10 ounces or more of fluid).

(2) Flammable Fluid or Vapor Tank. Any fuel, flammable, fluid, or vapor tank, reservoir, or collector.

(3) Sufficiently Isolated. Fuel, flammable fluids, or vapors in a tank, reservoir, or collector are insulated, removed, otherwise protected or a combination such that their worst case temperatures (the worst case measured or calculated surface temperature of their containers) in either normal or emergency service is always 50° F or more away from the autoignition temperature of the fuel, flammable fluid, or vapor in question.

(4) Minimum Autoignition Temperature. The temperature at a given vapor pressure at or above which liquid fuel or fuel vapor will self combust. When determining the minimum design value of autoignition temperature which will occur in either normal or emergency operations, the critical, in-service combination of vapor pressure and fuel temperature should be determined.

(5) Hazardous Heat Transfer. A total incident heat flux (a combination of conduction, convection, and radiation, as applicable) from or in an engine compartment or other designated fire zone, which would raise the temperature level of a flammable fluid or fuel, their vapors, or the surface temperature of their containers to within 50° F or less of the minimum in-service autoignition temperature. Typically, the most critical heat transfer case to be considered is emergency service where a severe fire (see definition) is assumed to occur in each engine compartment and each designated fire zone on a case-by-case basis.

(6) Severe Fire. See definition in paragraph AC 27.859.

c. Procedures.

(1) The fuel, flammable fluid, and vapor system designs should be reviewed early in certification to insure that all flammable fluid or vapor tanks are properly identified and isolated from engines, engine compartments, and other designated fire

zones during both normal and emergency operations such as in-flight engine compartment or other fire zone fires. In some cases fuel or flammable fluid components must be located in an engine compartment or other designated fire zone. In these cases, an equivalent safety finding (which considers the design, construction, materials, fuel lines, fittings, and controls used in the system, or system segment, contained in the engine compartment or other designated fire zone) should be undertaken as a part of the normal certification process. If the level of safety provided is equivalent to that provided by removing the system or system segment out of the engine compartment or designated fire zone, then the design should be accepted. For fuel tanks only, isolation is required by regulation to be achieved by use of either a firewall (reference paragraph AC 27.1191 for Firewall Requirements) or by use of a shroud. A shroud if used should be fireproof (see § 1.1 for definition and the definition of a Severe Fire for further details) and should be drainable (or otherwise inspectable) to insure the fuel tank is not leaking in service. For other flammable fluid or vapor tanks, the regulations allow either the identical treatment previously described for fuel tanks (i.e., firewalls or shrouds) or, alternatively, use of an equivalent safety finding. The equivalent safety finding, if used, can be made as part of the standard certification process. Regulations require that the equivalent safety finding be based on system design, tank materials, tank supports, and flammable fluid system connectors, lines, and controls. In all cases the flammable fluids, fuels, and vapors should be sufficiently isolated from hazardous heat fluxes during both normal and emergency operations to prevent autoignition.

(2) In addition, the regulations require at least one-half inch of clear airspace between each flammable fluid or vapor tank and each firewall or shroud that isolates the system, unless equivalent means (such as fireproof insulation) are used to prevent hazardous heat transfer from each engine compartment or other fire zone to the flammable fluid or vapor mass (or its container surface) at the fluid or vapor's minimum autoignition temperature. If in-service structural deflections are significant, they must be taken into account when certifying the one-half inch minimum clear airspace requirement. For example, if a one-half inch clearance exists on the ground but in some normal and emergency flight conditions (e.g., autorotation) the one-half inch is reduced to one-fourth inch at a critical time (in-flight engine fire), then the design (static) configuration should have at least a one-half plus one-fourth equals three-fourths inch static clear airspace to insure the regulation's intent is met. Alternatively, fireproof insulation or additional stiffeners could be used to insure the regulation's intent is met (i.e., the thermal equivalent of one-half inch clearance is maintained at all times). Any material used as insulation on or used adjacent to a flammable fluid or vapor tank, should be certified as chemically compatible with the flammable fluid or vapor and to be non-absorbent in case of fuel or vapor leaks. Otherwise, the material should either be treated for compatibility and non-absorbency or not accepted.

AC 27.1187. <u>§ 27.1187 VENTILATION</u>.

a. <u>Explanation</u>. To ensure that any component malfunction which results in fuel, flammable fluid or vapor leaks is safely drained or vented overboard and to ensure that

a fire hazard is not created during either normal or emergency service, there should be complete, rapid drainage and ventilation capability present for each part of the rotorcraft powerplant installation and any other designated fire zone which utilizes flammable fluid or vapor carrying components. As a minimum, the routing, drainage, and ventilation system should accomplish the following:

(1) It should be effective under normal and emergency operating conditions.

(2) It should be designed and arranged so that no discharged fluid or vapor will create a fire hazard under normal and emergency operating conditions.

(3) It should prevent accumulation of hazardous fluids and vapors in engine compartments and other designated fire zones.

b. Definitions. Drip Fence. A physical barrier that interrupts the flow of a liquid on the underside of a surface, such as a fuel tank, and allows any leaked liquid to drip from the surface away from hazardous locations to a safe external drain.

c. Procedures. The design of flammable fluid and gas systems running through engine compartments and other designated fire zones should have a thorough hazard analysis performed early during certification that is updated periodically as design changes dictate. The hazard analysis should identify and quantify all normal and emergency service failures that could result in leakage of fuel, flammable fluids and vapors. Once these potential hazards are identified and quantified, appropriate design features, such as drains, drip fences and vents, that minimize or eliminate the hazard should be provided. These means should be analyzed, tested, or a combination as necessary, to ensure that their size, flow capacity, and other design parameters are adequate to rapidly remove hazardous fluids and vapors safely away from the rotorcraft under normal and emergency flight conditions. Typically a venting or draining system should be designed to a 3-to-1 flow capacity margin over the probable worst case leak to which it could be subjected. Adverse effects such as clogging and surface tension flow reduction should be accounted for in design. Testing, including flight testing, using inert fluids or vapors may be necessary for proper design certification. In some instances it may be appropriate to include ventilation and drainage tests when the aircraft is parked.

AC 27.1189. § 27.1189 (Amendment 27-23) SHUTOFF MEANS.

a. Explanation.

(1) This section establishes the requirements for controlling hazardous quantities of flammable fluids which flow into, within, or through designated fire zones.

(2) When any shutoff valve is operated, any equipment, including a remaining engine, which is essential for continued flight, cannot be affected.

b. Procedures.

(1) Combustible fluid supply lines which pass into, within, or through a firewall into the fire zone must incorporate shutoff valves. This requirement does not apply to lines, fittings, and components which were certified with and are part of the engine. These requirements do not apply to oil systems for reciprocating engines with less than 500 cubic inches displacement or to any other installation where all components, including the oil tanks, are fireproof or are located in an area that will not be affected by an engine fire.

(2) Eight fluid ounces or less of a combustible fluid is not considered hazardous and no more than this amount should be present after activating the shutoff valve.

(3) Engine isolation is to be maintained when incorporating shutoff valves into engine fuel and lubrication lines. The design should ensure that when one engine is shut down or fails and the fuel and lubrication fluid shutoff valves are activated, the remaining good engine is not affected in any way, and the rotorcraft can continue safe flight to a landing. This should be demonstrated by test.

(4) Each shutoff valve located in a fire zone should be fireproof. If the shutoff valve is located outside of the fire zone, then it should be at least fire resistant or protected so that it will function under a worst case fire condition within a fire zone. This should be demonstrated by test.

(5) For primary propulsion engine installations, the flammable fluid shutoff should be protected from inadvertent operation. Where electrical shutoffs are used, the switches should be guarded or require double actions. If the shutoffs are mechanically activated, the design of the knob and the location of the lever should be such that inadvertent actuation cannot occur. It must be possible to reopen the shutoff valve after it has been closed and this should be demonstrated by test.

AC 27.1191. § 27.1191 (Amendment 27-2) FIREWALLS.

a. Explanation. This section states the certification requirements for the use of fireproof protective devices such as firewalls, shrouds, or equivalent. These devices are necessary to isolate each engine (including combustor, turbine, and tailpipe sections of turbine engines and auxiliary propulsion units (APU); each APU; each combustion heater; each unit of combustion equipment; or each high temperature device (or source) from personnel compartments and critical components (not already protected under § 27.861). The isolation of these fire zones is necessary to prevent the spread of fires, prevent or minimize thermal injuries and fatalities, and prevent damage to critical components that are essential to a controlled landing. Even though § 27.1191(b) implicitly excludes APU's, combustion heaters, and other combustion equipment that are not used in flight; they should be protected by fireproof enclosures, because of the requirements of the relevant parts of §§ 27.1183 through 27.1203. This is because, even if the device is rendered inoperative in flight, it typically contains residual heat,

fuel, fumes and potential ignition sources (i.e., “potential hazards”). Each fireproof protective device must, by regulation, meet the following criteria:

(1) Its design and location must take into account the probable fire path from each fire zone or source considering factors such as internal airflow, external airflow, and gravity.

(2) It must be constructed so that no hazardous quantity of air, fumes, fluids, or flame can propagate through it to unprotected parts of the rotorcraft.

(3) Its openings (e.g., shaftholes, lineholes, etc.) must be sealed with close fitting fireproof grommets, bushings, bearings, firewall, fittings, or equivalent that prevent burn through and leakage of hazardous fumes or fluids from the fire zone.

(4) It must be fireproof (see definition).

(5) It must be either corrosion resistant or otherwise safely protected from corrosion.

b. Definitions.

(1) Fireproof Protective Device. A fireproof protective device is a device such as a firewall, shroud, enclosure, or equivalent used to isolate a heat or potential fire source (severe fire) from personnel compartments and from critical aircraft components which are essential for a controlled landing.

(2) Fireproof. Fireproof is defined in § 1.1 “General Definitions.”

(3) Controlled Landing. A landing which is survivable (i.e., does not fatally injure all occupants) but may produce an unairworthy, partially salvageable, or unsalvageable rotorcraft.

(4) Severe Fire. See Definition in paragraph AC 27.859.

c. Procedures. Fireproof protective devices are typically certified by analysis, tests, or a combination conducted during the certification process, including flight tests or simulated flight tests, as follows:

(1) Fireproof protective devices should be provided wherever a hazard exists which requires isolation from a severe fire to avoid fires in personnel compartments and to avoid thermal damage to critical components (such as structural elements, controls, rotor mechanisms, and system components) that are necessary for a controlled landing. A thorough hazard analysis should be conducted during certification to identify, define and quantify in order of severity (i.e., maximum temperature, hot exposed area, etc.) all thermal hazards or zones that require fireproof protection in a given design. Engines (including the combustor, turbine, and tailpipe sections of turbine engines), APU’s,

combustion heaters, and combustion devices are required by regulation to be isolated. Other high temperature devices may also require isolation because of local hot spots (which occur during normal operations or from failure modes) that can thermally injure occupants or cause spontaneous combustion of surroundings. A hazard analysis should identify these potential problems and provide proper certification solutions.

(2) Fireproof protective devices should be able to withstand at least 2000 ± 150° F for at least 15 minutes (reference AC 20-135). The fireproof protective device should allow protected parts, subsystems or systems to perform their intended function for the duration of a severe fire (see definitions). For firewalls, examples of flat, geometry materials undergoing uniform heat fluxes with material gauges that automatically meet the certification requirements are given in figure AC 27.1191–1. If firewalls are utilized that involve other materials, significant geometric changes, or significantly non-uniform heat fluxes, then automatic compliance may not be assured. In such cases the fireproof protective device should be analyzed using the severe fire definition and, in some cases, tested in accordance with AC 23–2 to ensure proper certification. For example, a curved protective surface may absorb a uniform incident heat flux unevenly and create a local hot spot that exceeds 2,150° degrees Fahrenheit that burns through in less than 15 minutes; whereas, a flat surface of equal thickness might not exceed 2,150°degrees Fahrenheit and would not burn through in less than 15 minutes. It should be noted that composite materials are not generally used for protective devices because of their inability to withstand high temperatures (i.e., exceedance of the glass transition temperature); however, some specially formulated composites have been previously certified as engine cowlings. Titanium is an acceptable material for fireproof protective devices such as firewalls. However, use of titanium should always be carefully considered and reviewed, because it can lose all structural ability and burn severely (self combust) above 1,050° F, under certain thermodynamic environments, and contribute to the fire instead of providing the intended fire protection. AC 33–4, “Design Considerations Concerning the Use of Titanium in Aircraft Turbine Engines” and MIL-HDBK-5D contain more detailed information on the unique thermal properties of titanium.

FIGURE AC 27.1191-1
TABLE OF MATERIALS AND GAGES ACCEPTABLE
FOR FIREPROOF PROTECTIVE DEVICES WITH FLAT
SURFACE GEOMETRIES(1)

MATERIAL(2)	MINIMUM THICKNESS(3)
Titanium Sheet	.016 in
Stainless Steel	.015 in
Mild Carbon Steel	.018 in
Terne Plate	.018 in
Monel Metal	.018 in
Firewall Fittings (Steel or Copper Base)	.018 in(4)

NOTES:

(1) Assumes essentially flat vertical or horizontal surfaces undergoing a uniform heat flux. Any significant variation in either geometry or heat flux distribution should be examined in detail for adequate gauge thicknesses on a case-by-case basis.

(2) Must have corrosion protection if not inherent in the material itself.

(3) The minimum thickness is for thermal containment only. Structural integrity considerations may require thickness increases. MIL-HDBK-5D contains material allowable versus temperature data for most common metallic materials.

(4) This is the minimum wall thickness measured at the smallest dimension (e.g., thread root or other location) of the part.

(5) Distortion of thin sheet materials and the subsequent gapping at lap joints or between rivets is difficult to predict; therefore, testing of the simulated installation is necessary to prove the integrity of the design. However, rivet pitches of 2 inches or less on non load-carrying titanium firewalls of .020 inch or steel firewalls of .018 inch are acceptable without further testing.

(3) The probable path of a fire (as affected by internal and external air flow during normal flight and autorotation, gravity, flame propagation paths, or other considerations) should be taken into account when performing the hazard analysis of item (1). Such a review will ensure that fireproof protective devices are placed in the proper location for intercepting, blocking or containing a severe fire before occupants are injured and a controlled landing is prevented. If the probable path cannot be readily determined by inspection or analysis, testing using simulated air flows, rotorcraft attitudes, and dyed inert fluids or vapors can be used to aid in this determination.

(4) Each opening in a protective device should be sealed with close fitting sealing devices such as fireproof grommets, bushings, firewall fittings, rotating seals or equivalent that are at least as effective as the fireproof protective device itself. This is necessary to ensure that no local breakdowns in protection occur. For materials not listed as acceptable in item (1), analysis and testing should be required in accordance with FAA/AUTHORITY standards and the definition of a severe fire for proper substantiation.

(5) Each protective device should be fireproof in order to withstand a severe fire. Unless designs and materials have been previously FAA/AUTHORITY approved (e.g., see Item 1), the protective device's design and material selection should be tested to ensure its fireproof thermal and structural integrity. A full-scale test of a structurally loaded article or a representative sample should be conducted to ensure proper compliance is achieved. Also, the continued sealing ability of the protective device in its deformed state due to a hard controlled landing should be considered during certification (e.g., use of ductile materials). The corrosion environment should be defined and appropriate protection provided. Phased inspections should be specified, if necessary, to ensure continued corrosion integrity. Certification tests for adequacy of corrosion protection should be conducted using sample plates or by other equivalent means, as required.

AC 27.1193. § 27.1193 COWLING AND ENGINE COMPARTMENT COVERING.

a. Explanation.

(1) Section 27.1193(a) requires the cowling and engine compartment coverings to structurally withstand loads experienced in flight.

(2) In order to prevent pooling of flammable fluids, § 27.1193(b) requires rapid and complete drainage from the cowling and engine compartment.

(3) Section 27.1193(c) requires the drain of paragraph (b) to purge the fluid in such a manner not to create a fire hazard.

(4) Section 27.1193(d) requires the cowling and engine compartment covering to be at least fire resistant and paragraph (e) requires them to be fireproof where they may experience high temperatures due to the exhaust system.

b. Procedures.

(1) Compliance with § 27.1193(a) can be shown by analyzing the cowling and engine compartment covering and determining that no structural degradation will occur under the highest loads experienced on the ground or in flight.

(2) Compliance with § 27.1193(b) can be accomplished by ensuring that the drain will discharge positively with no traps and is a minimum of 0.25 inches in diameter.

(3) Compliance with § 27.1193(c) can be demonstrated by colored liquid flowing through the drain system while in flight. The dye should not impinge on any ignition source during any approved flight regime.

(4) Compliance with § 27.1193(d) can be accomplished by showing that the cowling and engine compartment covering is fire resistant. Fire resistant in this context means a material that has the capacity, under expected service conditions (load, vibration, airflow), to withstand the heat associated with fire at least as well as aluminum alloy in dimensions appropriate for the purpose.

(5) Compliance with § 27.1193(e) can be accomplished by showing that the cowling and engine compartment coverings retain adequate structural integrity when subjected to elevated temperatures that may be expected in service.

AC 27.1193A. § 27.1193 (Amendment 27-23) COWLING AND ENGINE COMPARTMENT COVERING.

a. Explanation. Amendment 27-23 adds a new § 27.1193(f) that requires redundant retention means for each panel, cowling, engine, or rotor drive system covering that can be opened or readily removed. Conventional fasteners for these devices are subject to frequent operation by maintenance personnel and have deteriorated, failed from wear or vibration, or been left unsecured after preflight inspections. Such a failure could be hazardous if a loose panel, cowling, or covering comes in contact with the rotors or critical controls.

b. Procedures. All of the policy material pertaining to this section remains in effect with the following additions:

(1) Compliance with § 27.1193(f) can be accomplished by simulating, or actually failing, one or more of the retention devices or by structural analysis. It should be shown that the cowling or cover will not open, strike, or be struck by the rotor or other critical component.

(2) Consideration should be given to minimize the possibility of latches being improperly closed that could result in a cowl coming open in flight.

(3) The failure of one latching device should not cause the failure of another latching device. If a failure of a single retention device can contribute to multiple failures, these multiple failures should be considered.

(4) The consequences of “forgetting” to latch a cowl should be considered.

(5) The use of safety straps should be considered to minimize the impact of a latching device failure.

AC 27.1194. § 27.1194 (Amendment 27-2) OTHER SURFACES.

a. Explanation. This section states the fire resistance requirements for material surfaces near engine compartments and designated fire zones (other than tail surfaces not subject to heat, flames or sparks emanating from a designated fire zone or engine compartment).

b. Definition.

(1) Other Surface. Any airframe, system, or powerplant component aft of and near an engine compartment, a designated fire zone, or another heat source which would receive a heat flux as a result of a fire in the engine compartment or fire zone that would require the component to be fire resistant.

(2) Fire Resistant. In accordance with § 1.1, is defined as follows:

(i) Sheet metal or structural members with the capacity to withstand the heat associated with the fire at least as well as aluminum alloy in dimensions appropriate for the purpose for which they are used.

(ii) Fluid carrying lines, fluid system parts, wiring, air ducts, fittings and powerplant controls with the capacity to perform their intended functions under the heat and other conditions resulting from a fire.

(3) Fire. A fire in either an engine compartment or a designated fire zone is assumed to occur that produces a heat flux on a system, airframe or powerplant component aft of or near the fire. The effect of each such fire on other surfaces must be considered on a case-by-case basis to determine the critical case. Unless a more rationale definition is furnished and approved during certification, the fire in any engine compartment or designated fire zone should be assumed, for purposes of analysis, to be a severe fire (see definition in paragraph AC 27.859).

c. Procedures.

(1) Other surfaces should be identified during certification by a design review and by a conservative, thorough hazard analysis based on an analytical estimate of the total heat flux (i.e., conduction, convection, and radiation in combination, as applicable)

using the definition of a severe fire and of the resultant “other surface” temperature based on a single fire occurring in each engine compartment and designated fire zone, on a case-by-case basis. Once the other surfaces are identified and their severe fire induced maximum temperatures determined, their configuration and material selection should be reviewed on a case-by-case basis to determine either that they are fire resistant, that they can be made fire resistant (within the limits of practicability), or that it is impracticable to make them fire resistant. If the non-fire resistant other surfaces can be readily made fire resistant they should be. If it is impracticable to make them fire resistant, then they should be relocated, insulated, or a combination in order to reduce the total incident heat flux (and, thus, lower their surface temperature) so that they no longer need be fire resistant. If insulation is used to shield a surface that is subjected to a significant temperature, it must be fire resistant.

(2) A partial validation of analytical heat flux models using the definition of a severe fire can sometimes be achieved during certification tests by using thermocouples or heat-sensitive stickers to measure in-flight temperature ranges and distributions on other surfaces from known thermal environments in engine compartments or other designated fire zones.

AC 27.1195. § 27.1195 (Amendment 27-5) FIRE DETECTOR SYSTEMS.

a. Explanation.

(1) This section requires quick-acting fire detectors to be installed on turbine powered rotorcraft, when the engine compartment cannot be readily observed in flight by the pilot in the cockpit.

(2) The number of detectors and locations must be sufficient to ensure prompt detection of fire in the engine compartment.

b. Procedures.

(1) The detector system should be designed for highest reliability to detect a fire and not to give a false alarm. It is desirable that it only responds to a fire and misinterpretation with a lesser hazard should not be possible. Engine overtemperature, harmless exhaust leakage, and bleed air leakage should not be indicated by a fire detector system. A fire detection system should be reserved for a condition requiring immediate measures such as engine shutdown or fire extinguishing. There are three general types of detector-procedure systems that are commonly used:

(i) A manual system utilizes warning lights to alert the pilot who then follows prescribed cockpit procedure as a countermeasure. A manual system is adequate for hazards in which a few seconds are not important.

(ii) There is also a semi-automatic system. Occasionally a rotorcraft becomes so complex that the emergency procedure exceeds reasonable expectations

of the pilot. In such cases, psychology should be weighted against complexity, and "panic switches," combining multiple procedure functions, should be provided to simplify the mental demands on the pilot. Speed is gained by such designs for hazards which may need it.

(iii) The detector of an automatic system automatically triggers the appropriate countermeasures and warns the pilot simultaneously. Such a system should be carefully evaluated to assure that the advantages outweigh the disadvantages and potential malfunctions.

(2) Fires, or dangerous fire conditions can be detected by means of various existing techniques. The following is a partial list of available detectors:

(i) Radiation-sensing detectors.

(ii) Rate-of-temperature-rise detectors.

(iii) Overheat detectors.

(iv) Smoke detectors.

(v) CO detectors.

(vi) Combustible mixture detectors.

(vii) Fibre-optic detectors.

(viii) Ultraviolet.

(ix) Observation of crew or passengers.

(3) In many rotorcraft it is desirable to have a detection system which incorporates several of these different types of detectors. Radiation-sensing detectors are most useful where the materials present will burn brightly soon after ignition, such as in the powerplant accessory section. Rate of rise detectors are well-suited to compartments of normally low ambient temperatures and low rates of temperature rise where a fire would produce a high temperature differential and rapid temperature rise. It should be noted that under certain circumstances, where a relatively slow temperature increase occurs over a considerable period of time, a fire can occur without detection by rate of rise detectors. Overheat detectors should be used wherever the hazard is evidenced by temperatures exceeding a predicted, set value. Smoke detectors may be suited to low air flow areas where materials may burn slowly, or smolder. Fibre-optic detectors can be used to visually observe the existence of flame or smoke. The three major detector types used for fast detection of fires are the radiation-sensing, rate-of-rise, and overheat detectors. Radiation-sensing detectors are basically "volume"

type which senses flame within a visible space. Overheat-fire detectors can be obtained in either “continuous” or “unit” type.

(4) The detector system should:

(i) Indicate fire within 15 seconds after ignition, and show in which engine compartment the fire is located.

(ii) Remain on for the duration of the fire.

(iii) Indicate when the fire is out.

(iv) Indicate re-ignition of the fire.

(v) Not by itself precipitate or add to the potential of any other hazards.

(vi) Not cause false warnings under any flight or ground operating condition.

(5) Additional features of the detection system are as follows:

(i) A means should be incorporated so that operation of the system can be tested from the cockpit.

(ii) Detector units should be of rugged construction, to resist maintenance handling, exposure to fuel, oil, dirt, water, cleaning agent, extreme temperatures, vibration, salt air, fungus, and altitude. Also, they should be light in weight, small, and compact, and readily adaptable to desired positions of mounting.

(iii) The detector system should operate on the rotorcraft electric system without inverters. The circuit should require minimum current unless indicating a fire or unless a monitoring system is in use.

(iv) Fixed temperature fire detectors should preferably be set at 100° F (37.7° C) to 150° F (65.6° C) above maximum safe ambient temperature, or higher when in compartments where extremely high rate of rise is normally encountered.

(v) Detector system components located within fire zones should be fireproof.

(vi) Each detector system should actuate a warning device which indicates the location of the fire. If fire warning lights are used, they must be in the pilot’s normal field of view.

(vii) Two or more engines should not be dependent upon any one detector circuit. The installation of common zone detection equipment prevents the detection

system from distinguishing between the engine installations, necessitating shutting down more than one engine.

(6) The sensing portion of the fire detection system should not extend outside of the coverage area into another fire zone. Detectors, with the exception of radiation-sensing detectors, should be located at points where the ventilation air leaves compartments. If a reverse-flow cooling system is used, detectors should be installed at locations which are outlets under both flight and ground operating conditions. Stagnant air spaces should be avoided and the number of ventilation air exits should be kept to a minimum. Compliance with these recommendations allow the effective placement of a minimum amount of detectors, and still ensure prompt detection of fire in those zones. Radiation-sensing detectors should be located such that any flame within the compartment is immediately sensed. This may or may not be where the ventilation air leaves the compartment.

(7) Fire detectors should be installed in designated fire zones, the combustor, turbine, and tailpipe sections of turbine installations.

(i) Engine Power Section (Combustor, Turbine, and Tailpipe): This zone is usually characterized by predictable hazard areas which facilitate proper detector location. It is recommended that coverage be provided for any ventilating air outlet as well as intermediate stations where leaking combustibles may be expected.

(ii) Compressor Compartment: This is usually a zone of relatively low air flow velocities, but wide geographical possibility for fires. When fire detectors other than radiation-sensing detectors are used, detection at air outlets provides the best protection, and intermediate detector locations are of value only when specific hazards are anticipated.

(iii) Accessory Bullet Nose: Where such a compartment is so equipped that it is a possible fire zone, its narrow confines permit sufficient coverage with one or more detectors at the outlets.

(iv) Heater Detector Location: An overheat detector should be placed in the hot air duct downstream of the heater. If the heater fuel system or exhaust system configuration is such that it is a fire hazard, the compartment surrounding the heater should also be examined as a possible fire zone.

(v) Auxiliary Power Unit Detector Location: The use of a combustion-driven auxiliary power unit creates another set of typical engine compartments defined and treated as above. Some units are so shrouded with fireproof material that these compartments exist only within the confines of the shroud. They are still, however, fire zones and should have a detection system.

CHAPTER 2. PART 27
AIRWORTHINESS STANDARDS
NORMAL CATEGORY ROTORCRAFT

SUBPART F - EQUIPMENT

EQUIPMENT - GENERAL

AC 27.1301. § 27.1301 FUNCTION AND INSTALLATION.

a. Explanation. It should be emphasized that this rule applies to each item of installed equipment including optional as well as required equipment.

b. Procedures.

(1) Information regarding installation limitations and proper functioning is normally available from the equipment manufacturers in their installation and operations manuals. In addition, some other paragraphs in this AC include criteria for evaluating proper functioning of particular systems. (An example is paragraph AC 27 MG 1 for avionic equipment.)

(2) This general rule is quite specific in that it applies to each item of installed equipment. It should be emphasized, however, that even though a general rule is relevant, a rule that gives specific functional requirements for a particular system will prevail over a general rule. Therefore, if a rule exists that defines specific system functioning requirements, its provisions should be used to evaluate the acceptability of the installed system and not the provisions of this general rule. It should also be understood that an interpretation of a general rule should not be used to lessen or increase the requirements of a specific rule. Section 27.1309 is another example of a general rule, and this discussion is appropriate when applying its provisions.

(3) For optional equipment, the emphasis on functioning is rather limited compared to that for required equipment. The conditions under which the optional equipment is evaluated should be recorded in the type inspection report. The major emphasis for this type of equipment should be to ensure it does not interfere with the operation of systems that are required for safe operation of the rotorcraft, and that the failure modes are acceptable and do not create any hazards.

AC 27.1303. § 27.1303 FLIGHT AND NAVIGATION INSTRUMENTS.

NOTE: The EFIS guidance material provided in this section is not directly related to a showing of compliance with § 27.1303. The material will be moved to a new AC 27 EFIS MG section at the next revision.

a. Explanation. This rule lists the flight and navigation instruments that are required for VFR operation. Additional rules to be used when determining compliance for the flight and navigation instrument installation for rotorcraft are § 27.1321, Arrangement and Visibility, and Part 27, Appendix B, paragraphs VIII(a) and (b), for IFR operation considerations. Additional information regarding the different instruments can be found by referring to the Technical Standard Order (TSO) for each one. Compliance with the TSO requirements does not ensure compliance with the appropriate Part 27 installation requirements. Other considerations may also be found by reviewing the requirements of §§ 27.1323, 27.1327, 27.1335, 27.1381, 27.1543, 27.1545, and 27.1547.

b. Procedures.

(1) The following instruments are the required minimum flight and navigation instruments for VFR:

(i) Airspeed indicator.

(ii) Altimeter.

(iii) Magnetic Direction Indicator.

If additional instruments are required per other considerations, then evaluation will take place to determine appropriateness.

(2) Refer to Part 27, Appendix B, paragraphs VIII(a) and (b), for IFR operation considerations.

(3) If a speed warning device is required to be included as part of the rotorcraft design, it must meet the performance requirements given in the rule. In addition, the evaluation of the acceptability of the aural warning (i.e., this warning differs distinctively from aural warnings used for other purposes) should be accomplished by flight test personnel as part of their overall evaluation.

(4) Electronic Flight Instrument Systems (EFIS).

(i) Explanation. The increased use of microprocessor technology in avionic systems has resulted in the use of computer-generated graphics to replace conventional electromechanical instruments, which are used for the display of flight information required by § 27.1303. For IFR certified aircraft, the EFIS usually is used for the display of the magnetic gyro-stabilized direction indicator (slaved compass system). These computer-generated graphics are usually displayed on small multicolor-shadow-mask cathode ray tubes (CRT) or liquid crystal displays (LCD), and replace the horizontal situation indicator (HSI) and the attitude direction indicator (ADI). This section presumes that the EFIS for which approval is sought meet the general requirements of an EFIS for a technical standard order or a small category airplane with

regard to color, symbology, operation, and so forth. This paragraph along with some others in this document principally highlights the areas that are peculiar to the installation in a normal category rotorcraft. A discussion of the flight director function performed by the EFIS is given in paragraph AC 27.1335. A discussion of the location of the displays is contained in paragraph AC 27.1321. A discussion of the recommendations for an EFIS is contained in the latest versions of both AC 25-11, Transport Category Airplane Electronic Display Systems and AMJ 25-11, Electronic Display Systems, and refer to AC-23.1311-1A, Installation of Electronic Displays in Part 23 Small Airplanes, dated March 12, 1999.

(ii) Procedures.

(A) System Components. The system components require qualification testing to determine that their design is acceptable, free from hazards, and suitable to their airborne environment. The components of the EFIS should meet the requirements of TSO C-113, C2d, C3d, C4c, C5e, C6d, and C10b (other TSOs for EFIS may apply).

(1) Environmental Qualification. The EFIS hardware must be shown to be suitable to its airborne environment. A desirable way to qualify the system component is to obtain approval to the appropriate TSO. If the equipment is not TSO approved, it should be shown via testing that it complies with the requirements of SAE Document AS-8034, the latest revision of RTCA Document DO-160, and other appropriate standards. This may include testing in accordance with the appropriate categories of the latest revision of RTCA Document DO-160, JEDEC Publication No. 64D (Protection from Ionizing Radiation), and UL Document No. 1418 (Impact Implosion Test).

(2) Software. The embedded software should be qualified in accordance with the latest revision of RTCA Document DO-178B. The software level is contingent on the worst case criticality of the function it performs. The software should be designed to provide adequate consideration for this factor (reference paragraph AC 27.1309). A similar consideration is required for altitude and airspeed.

(B) System Installation Considerations.

(1) Human Factors. Humans are very adaptable, but they adapt at varying rates with varying degrees of effectiveness and mental processing compensation. Thus, what some pilots might find acceptable and approvable, others would reject as being unusable and unsafe. Rotorcraft EFIS displays must be effective when used by pilots who cover the entire spectrum of variability. Relying on a requirement of “train to proficiency” may be unforeseeable, economically impracticable, or unachievable by some pilots without excessive mental workload as compensation.

(i) In order to minimize the potential for changes to first time EFIS installation approvals, the test program for EFIS displays should include sufficient flight and simulation time, using a representative population of pilots, to substantiate:

(a) Reasonable training times and learning curves; (however, realistic assumptions should be made concerning the actual time for an average pilot to learn/adapt to a system. Also, these assumptions should reflect the fact that Part 91 pilots might not be trained, since training is not typically required.);

(b) Usability in an operational environment;

(c) Acceptable interpretation error rates equivalent to or less than conventional displays;

(d) Proper integration with other equipment that uses electronic display functions;

(e) Acceptability of all failure modes including those failures or combinations of failures not shown to be extremely improbable; and

(f) Compatibility with other displays and controls.

The manufacturers should provide human factors support/rationale for their decisions regarding new or unique features in their EFIS display. Evaluation pilots should verify that the data supports a conclusion that any new or unique features have no human factors traps or pitfalls, such as display perceptual or interpretive problems, for a representative pilot population.

(ii) It is desirable to have display evaluations conducted by more than one pilot, even for certification of EFIS displays that do not incorporate significant new features. For display designs that incorporate unproven features, evaluation by a greater number of pilots should be considered. To help the FAA/AUTHORITY certification team gain assurance of a sufficiently broad exposure base, the electronic display manufacturer or installer should develop a test program with the certificating office that gathers data from FAA/AUTHORITY test pilots, company test pilots, and customer pilots who will use the display. A reasonable amount of time for the pilot to adapt to a display feature can be allowed, but long adaptation times must receive careful consideration. Any attitude display format presented for FAA/AUTHORITY approval should be sufficiently intuitive in its design so that no training is required for basic manual rotorcraft control.

(iii) For those electronic display systems that have been previously approved (including display formats) and are to be installed in rotorcraft in which these systems have not been previously approved, a routine FAA/AUTHORITY certification review should be conducted. This program should emphasize the systems' integration in the rotorcraft, taking into account the operational aspects, which may require further detailed systems failure analysis (where "system" means display, driving electronics, sensors, and sources of information).

(iv) Simulation is an invaluable tool for display evaluation. Acceptable simulation ranges from a rudimentary bench test set up, where the display elements are viewed statically, to full flight training simulation with motion, external visual scene, and entire rotorcraft systems representation. For minor or simple changes to previously approved displays, one of these levels of simulation may be deemed adequate for display evaluation. For evaluation of display elements that relate directly to rotorcraft control (i.e., air data, attitude, power parameters, etc.), simulation should not be relied upon entirely. The dynamics of rotorcraft motion, coupled with the many added distractions and sensory demands made upon the pilot that are attendant to actual helicopter flight, have a profound effect on the pilot's perception and usability of displays. Display designers, as well as FAA/AUTHORITY test pilots, should be aware that display formats evaluated and found acceptable in simulation may well (and frequently do) turn out to be unacceptable in actual flight.

(v) Prior to defining the characteristics (color, symbology, etc.) or standards to be used on a specific display, a flight deck design philosophy should be established. Additionally, displays should be consistent across all systems in the flight deck. Documentation of the usage for display philosophy would help establish the working basis for determining compliance.

(2) Symbology and Function.

(i) When assessing the acceptability of the EFIS, consideration should be given to the effect of the loss of one of the CRT color guns. This type of failure is especially a factor in determining the acceptability of the installation for single-pilot operation.

(ii) Symbols should be distinctive to minimize misinterpretation or confusion with other symbols utilized in the displays. The type and function of symbology should be clearly defined and appropriately classified for pilot understanding. Symbols representing the same functions on more than one display should utilize the same shape and/or color-coding.

(3) Display Chromaticity and Luminance. The chromaticity and luminance of the displays should be determined to be acceptable for all cockpit lighting conditions which are expected in service. An expanded discussion of these characteristics may be found in AC 25-11 and AC 23.1311.

(4) Temperature Survey to Determine Proper Cooling of EFIS Components.

(i) Equipment Requiring Cooling Test. As with any avionic equipment, good engineering judgment may deem that all components of the EFIS should have an in-flight temperature survey performed to ascertain that the thermal environmental tolerance of the system components is not exceeded. Usually, the following general

guidelines may be used to aid in determining when an in-flight temperature survey is warranted.

(a) Components that contain a CRT, LCD, etc., require the temperature survey outlined in paragraph AC 2 7.1303b(4)(ii)(B)(4)(ii).

(b) Equipment which does not contain a CRT, LCD, etc., but is specified by the manufacturer to require forced air cooling (by an airframe-mounted system), usually requires a temperature survey.

(c) Equipment which does not contain a CRT, LCD, etc., and is not specified as requiring forced air cooling may usually have its critical thermal environment substantiated by laboratory testing.

(ii) Temperature Survey Testing. The temperature tests for the EFIS units should consist of a short-term test of approximately 30 minutes which accounts for an aircraft which has heat-soaked on the ramp. A factor of 25° F should be added to the maximum corrected temperature to account for “greenhouse effect.” A long-term test should be accomplished at various altitudes and limiting (low and high) airspeeds. All avionics equipment should be turned on during this test, and the cockpit panel lights should be operated at full intensity. The environmental control unit (ECU) or air conditioning system should not be operating during these tests; however, any windows or vents which are part of the “basic” TC rotorcraft may be utilized to ventilate the pilot’s stations. Both these tests should be corrected to the maximum temperature for which the rotorcraft is certified and a standard lapse rate for altitude as specified in this AC. If an airframe cooling system is necessary to keep the display units within acceptable temperature limits, then the pilot(s) must be made aware of a failure or malfunction of this cooling system. Some type of cockpit visual annunciation with the capability to perform a preflight test is usually utilized to fulfill this requirement.

(5) System Reliability.

(i) Failure of the EFIS to perform an intended function which results in the reversion to standby instruments or requires the use of abnormal procedures should be shown to be improbable.

(ii) For IFR operations, Appendix B of Part 27, paragraph VIII(b)(5)(iii), requires that the equipment, systems, and installations must be designed so that one display of the information essential to the safety of flight which is provided by the instruments will remain available to a pilot, without additional crewmember action, after any single failure or combination of failures that is not shown to be extremely improbable. The display of attitude, altitude, or airspeed is individually “essential to the safety of flight,” and, therefore, the loss of all attitude display, all airspeed information, or all altitude information to the pilot(s) should be extremely improbable. Also, any malfunction or failure of the EFIS which would result in the simultaneous incorrect display of this critical information should be extremely improbable. In view of the

relatively new technology embodied in the EFIS, the conventional technology electromechanical standby attitude indicator, with its independent power supply, should be retained.

c. Standby Instruments. The EFIS which have been approved on normal category rotorcraft at this time have only presented the critical function of attitude display. A specific requirement for a standby attitude instrument is contained in Appendix B of Part 27. This requirement is usually satisfied by an electromechanical panel-mounted gyro with an independent power source. Because of the mature technology of this type of standby attitude indicator, certain aspects of the EFIS installation have not been an area for concern. If, however, a total commitment of critical display functions is made to the “glass” technology, such that the standby attitude instrument requirement is satisfied by a software based CRT system, then several major areas of concern will be raised. Among these are the electromagnetic vulnerability of the system (protection from the effects of lightning and high energy radio frequency fields) and software. The certifications of EFIS with an electromechanical standby attitude indicator have not considered loss of function critical from a software aspect (reference paragraph AC 27.1309 for a discussion of software qualification).

AC 27.1305. § 27.1305 (Amendment 27-9) POWERPLANT INSTRUMENTS.

a. Explanation. This section specifies the instruments which are required for reciprocating and turbine engine installations. These instruments will provide the pilot with essential data to determine operational status of critical components and select desired performance conditions.

b. Procedures.

(1) FAR 27.1305(f), (g), and (l) requires a warning device for transmission oil temperature, gearbox oil pressure, and low fuel. An indicator/gage is not acceptable for use as a warning device since the indicator/gage is not a primary instrument and therefore is not actively monitored.

(2) There are advanced display systems that take advantage of microprocessor power by integrating the processing of several parameters. These systems have to date been referred to as Engine Caution Advisory Systems (ECAS) or as Integrated Instrument Display Systems (IIDS) and possibly other variations of these names. These systems typically integrate propulsion instruments, fuel quantity indication, and caution and warning system into a single display system. In traditional designs the powerplant instruments, fuel quantity display, and the caution and warning system are independent from each other. The integration of these systems/indicators eliminates their independence from one another and increases the probability of loss of more than one indicator/system as a result of a single fault or malfunction. Redundant design is generally applied to compensate for the loss of independence.

(i) This integration and resultant mitigation of independence can result in an increased opportunity for common mode failures. Approval of the compensating features is elevated in importance as it is this aspect that allows the concept to be acceptable and subsequently certifiable. The loss of all displayed information or erroneous information should be considered for determination of worst case criticality. With this determination of criticality, the design can be evaluated to see that it meets the minimum associated level of design assurance. Additionally, due to space limitations, some systems employ “page over” features that may have some difficulty displaying the required information when needed and human factors aspects must be considered.

(ii) The instrument display system must be investigated and found to be acceptable under both normal and emergency conditions, must perform its intended function under foreseeable operating conditions, and must be designed to minimize the hazards in the event of probable malfunction or failure.

(iii) It must be shown that there is appropriate redundancy to provide adequate compensation for the loss of independence in the system. If a multi-page system is employed, it must be shown that needed information is displayed when required. Specific issues that must be addressed to assure compliance with the minimum safety standards are as follows:

►The level of most severe hazard must be determined.

►Equivalent reliability and software design assurance to the determined criticality level must be shown.

(3) Additional sections to be consulted when determining the powerplant instrument installation design are §§ 27.1321, Arrangement and visibility; 27.1337, Powerplant instruments; 27.1381, Instrument lights; 27.1543, Instrument markings: General; 27.1549, Powerplant instruments; 27.1551, Oil quantity indicator; and 27.1553, Fuel quantity indicator.

AC 27.1305A. <u>§ 27.1305 (Amendment 27-23) POWERPLANT INSTRUMENTS</u>.

a. <u>Explanation</u>. Amendment 27-23 revises, edits, and adds new powerplant instrument requirements. Section 27.1305(l) was revised to require a low fuel warning device for each tank that can be used to feed an engine. The amendment allows a longer time between warning actuation and fuel exhaustion and requires the low fuel warning device to be independent of the normal fuel quantity indication system. Section 27.1305(q) was changed to extend its application to all rotorcraft (not just those with turbine engines) and to require an indication to the crew of the degree of filter blockage as it relates to the fuel flow requirements in § 27.955. Section 27.1305(s) was revised to require function indicators only for fuel heaters that can be selected or are controllable.

b. Procedures. The requirement and purpose for each instrument is self-explanatory in the amendment. Other sections that should be considered when designing powerplant instruments are listed in paragraph AC 27.1305.

AC 27.1305B. §27.1305 (Amendment 27-29) POWERPLANT INSTRUMENTS.

a. Explanation. Amendment 27-29 added Sections 27.1305(t) and 27.1305(u) to provide for 30-second/2-minute OEI power ratings.

(1) Section 27.1305(t) adds the requirement that a device or means be provided to alert the crew of the use of the 30-second and 2-minute OEI power level. The crew should be alerted when the 30-second or 2-minute interval begins and when the time interval ends. The amount of time spent at the 30-second or 2-minute OEI power levels is at the crew's discretion, unlike the other limits (i.e., torque, measured gas temperature, and gas generator speed) for 30-second OEI that are set by an automatic control required by § 29.1143. The purpose for providing the time interval alerts and automatically controlling the 30-second OEI limits is to free the crew from monitoring the engine instruments during critical phases of flight caused by the loss of an engine.

(2) Section 27.1305(u) adds the requirement for a device to record the usage and the amount of time spent at the 30-second OEI power level and the amount of time spent at the 2-minute OEI power level. The information recorded by this device is for the use of the ground crew to determine if maintenance actions/inspections are to be conducted.

b. Procedures. For the purpose of complying with FAR 27.1305(t) and 27.1305(u), the 2-minute OEI power level is considered to be achieved whenever one or more of the operating limitations applicable to the next lower OEI power rating are exceeded. The 30-second OEI power level is considered to be achieved whenever one or more of the operating limitations applicable to the 2-minute OEI power rating are exceeded.

(1) A review of the method to meet the requirements of Section 27.1305(t) should be conducted by the FAA/AUTHORITY Flight Test pilot. A determination should be made as to whether the method used to alert the crew of 30-second or 2-minute OEI power usage can be recognized and understood by the crew.

(2) To meet the requirements of Section 27.1305(u), a device should be installed on the engine or the airframe to record the time and each usage of 30-second and 2-minute OEI power levels. The information on the time and usage of 30-second and 2-minute OEI power should be recoverable from the recording device by ground personnel. The device should not be capable of being reset in flight and should only be capable of being reset by ground personnel. Prior to each flight this device should be capable of being checked for proper operation and to determine if 30-second or 2-minute OEI power levels were used during the previous flight.

c. Integrated Display Systems. This advisory material is to provide guidance for compliance to Part 27 and Part 29 regulations as they apply to integrated display systems. The integration aspects of these systems require some additional issues to be addressed during certification. The term “must” in this advisory material is used in the sense of ensuring the applicability of these particular methods of compliance when the acceptable means of compliance described herein is used. This advisory material establishes an acceptable means, but not the only means of certifying an integrated display system.

(1) Definitions.

(i) Integrity. The term “integrity” for the purpose of this advisory material includes the hardware quality requirements, including reliability; as well as the software level requirements, as defined in DO178B.

(ii) Criticality. The term “criticality” refers to the five levels of criticality addressed in FAA Advisory Circulars AC 27-1B and AC 29-2C.

(2) Related documents.

(i) Federal Aviation Regulations (FARs) paragraphs 21.21, 27.1301, 27.1309, 27.1305, and 27.1322

(ii) Standards - Latest revision of RTCA/DO178 and RTCA/DO-160;

(iii) SAE documents ARP4754 and ARP4761

(3) Background. A tendency to integrate functions/indications that have previously been independent is a result of technology advancement. Microprocessor driven systems have facilitated the ease of this integration. Integrated Instrument Display System (IIDS) or Engine Instrument and Caution Advisory System (EICAS) are examples of integrated display systems. IIDS, EICAS, or any other similar systems are defined as a combination of engine instruments (previously independent indicators), fuel quantity indication, and caution/warning parameters, as a minimum, presented by a common display driven by a common processor.

(4) Discussion. This design philosophy does not result in the traditional requirement for individual display independence for failure/malfunction considerations. This loss of independence means that a single failure could result in loss of most, if not all, instrument displays on the integrated display system. Redundancy of the integrated display system is often proposed to compensate for this lack of independence. However, redundancy alone may not meet the integrity requirements since they are derived from the level of criticality associated with the loss or malfunction of instrument/parameter displays for flight operations that are dependent on these indications.

(5) Certification Approach. A two step procedure should be used to determine the adequate safety level for this type of system. The first step is to determine the level of criticality associated with the total loss/malfunction of these functions/indications or loss/malfunction of the critical parts of the display. This can be achieved through the use of a functional hazard assessment (FHA). This criticality assessment must be a product of failure/malfunction of the indication system and the flight operation that would represent the worst case for loss of this information. The second step is to determine that the design integrity of the system is at least equal to the assessed criticality level determined in step one.

(6) Functional Hazard Assessment. The operational classifications to be considered when assessing the criticality are Cat A, Cat B, and IFR. The need for critical information varies with each of these different operational categories. An example would be the demand for OEI parameter information in the single engine Cat A operation. Another example is the loss of fuel quantity indication and fuel low level indication simultaneously in IFR flight conditions. The FHA should address not only loss of one type of indication, but combined loss of engine parameter indication, including total loss of display information, caution/warning, fuel quantity indication, and any other included display in combination with a particular flight operation. There are techniques to lessen the consequences of the failure/malfunction requirements for integrity, such as providing back-up displays for the information deemed critical for a particular operational consideration.

(7) Summary. The loss of all integrated display information for certain types of flight operations may have the highest level of criticality associated with it. The same may be true for malfunctions that result in misleading indications. These failures/malfunctions must be addressed by the commensurate design integrity level. Lesser levels of criticality must also be addressed by the appropriate design integrity levels.

AC 27.1307. § 27.1307 MISCELLANEOUS EQUIPMENT.

a. Explanation. This rule provides a listing of several items of required miscellaneous equipment. Each item seems to be self-explanatory except the one requiring a master switch arrangement. The purpose of a master switch arrangement is to allow rapid removal of sources of electrical power from the rotorcraft in an emergency situation.

b. Procedures. When reviewing possible solutions to the master switch arrangement requirement, the following considerations should be included.

(1) System separation. Since wiring from each electrical system will be brought in close proximity to each other, extra care should be taken to maintain some separation. As examples, common connectors, common grounds, and common wire routing should be avoided.

(2) Installation of switches. A single switch should be avoided since it introduces the possibility of a single failure turning off the entire electrical system. One solution that is commonly used provides a close grouping of the switches such that the pilot can easily reach all switches and turn them all off with one action. This solution requires a cockpit evaluation to ensure the installation will be suitable for different hand sizes. Another solution involves a gang bar that can be moved with a single motion to turn off all sources. This solution has been found to be acceptable in several instances. Other solutions should be evaluated on their own merits, and the primary emphasis should be on maintaining some minimum system separation and conducting a cockpit evaluation by flight test personnel.

AC 27.1309. § 27.1309 (Amendment 27-21) EQUIPMENT, SYSTEMS, AND INSTALLATIONS.

a. Types of Equipment. This regulation covers, but is not limited to electrical, pneumatic, and hydraulic power sources, associated distribution, and corresponding utilization systems.

b. Environmental Qualification.

(1) Laboratory Tests.

(i) Environmental Standards. In order to ensure that the components/systems under consideration will function properly when exposed to adverse environments, they should be tested in the laboratory under a simulated adverse environment. If a TSO exists and it is appropriate in environmental range and performance for an equipment installation, it is preferable that the equipment be TSO approved. If there is no applicable TSO or an existing TSO does not provide for a sufficiently adverse environment, the latest revision of Radio Technical Commission for Aeronautics (RTCA) Document DO-160 is an acceptable environmental standard for laboratory qualification of aircraft equipment.

(ii) Adverse environmental variables for all types of required and critical equipment include, but are not necessarily limited to, temperature, humidity, vibration, shock, altitude, overpressure, and power source transients.

(iii) For electrical/electronic equipment, adverse environmental variables include all of (b)(1)(i) and (ii) above plus overvoltage and undervoltage. Electronic equipment should also be tested for electromagnetic interference (EMI). These tests should include both emission and susceptibility evaluations of both conducted and radiated EMI.

(iv) Explosion Tests. Those items of electrical/electronic equipment that are to be located in areas subject to flammable fluids and vapors, as a result of any single probable malfunction or failure including failure of couplings or lines, should be tested as an ignition source. These tests consist of normal operation of the equipment in a physically contained explosive atmosphere. The explosion test procedure in the latest revision of DO-160 will satisfy this requirement. If another standard is used that is at least as good as the latest revision of DO-160, it may also be accepted to satisfy this requirement.

(2) Installed Environmental Tests. After the environmental ratings of the components/systems have been established, it should be ensured that as installed, these ratings will not be exceeded. Normally, installed equipment need not be instrumented and tested in flight, and it is not necessary to instrument the compartment or rack where the equipment is installed. Satisfactory environment and equipment compatibility are ensured by selection of the proper environmental category of

laboratory tests. The category is determined by the type of aircraft (reciprocating or turbine) and flight envelope (altitude and temperature). Exceptions to normal installations are: (a) Alternator/generator cooling, where radiated and conducted heat is almost always uncertain, also cooling air temperatures and flow rates are uncertain; (b) Where flight tests reveal excessive instrument panel vibration. In this case, the panel should be instrumented, tested, and, if necessary, design improvements made; and (c) Any other cases where good engineering judgment and application of sound engineering principles indicate a high likelihood that the installed environment is more severe than the equipment is capable of operating within.

(i) Temperature Tests.

(A) Temperature Survey to Determine Proper Cooling of Electrical/Electronic Equipment.

(1) Equipment Requiring Cooling Test. As with any avionic equipment, good engineering judgment may deem that all components of the electrical/electronic equipment should have an in-flight temperature survey performed to ascertain that the thermal environmental tolerance of the system components is not exceeded. Usually, the following general guidelines may be used to aid in determining when an in-flight temperature survey is warranted.

(i) Components which contain a CRT (e.g. EFIS) require the temperature survey testing outlined in paragraph AC 27.1309.b(2)(i)(B).

(ii) Equipment which does not contain a CRT, but is specified by the manufacturer to require forced air cooling (by an airframe mounted system), usually requires temperature survey testing.

(iii) Equipment which does not contain a CRT and is not specified as requiring forced air cooling may usually have its critical thermal environment substantiated by laboratory testing.

(B) Temperature Survey Testing. The temperature tests for the electrical/electronic equipment units should include a short-term test of approximately 30 minutes which accounts for an aircraft which has heat-soaked on the ramp. A factor of 25° F should be added to the maximum corrected temperature to account for “greenhouse effect.” A long-term test should be accomplished at various altitudes and limiting (low and high) airspeeds. All avionic equipment should be turned on during this test, and the cockpit panel lights should be operated at full intensity. The environmental control unit (ECU) or air-conditioning system should not be operating during these tests; however, any windows or vents which are part of the “basic” TC rotorcraft may be utilized to ventilate the pilot’s stations. Both these tests should be corrected to the maximum temperature for which the rotorcraft is certified and a standard lapse rate for altitude as specified in this AC. If an airframe cooling system is necessary to keep the display units within acceptable temperature limits, then the pilot(s) must be made aware

of a failure or malfunction of this cooling system. Some type of cockpit visual annunciation with the capability to perform a preflight test is usually utilized to fulfill this requirement.

(C) Temperature tests may be accomplished by instrumenting the installed equipment environment with a recorder that provides a permanent record of time, altitude, and temperature. The pertinent temperature should be recorded as the rotorcraft is operated throughout its altitude range, including ground operation. The maximum and minimum temperatures recorded should be corrected degree for degree to ensure the equipment under test remains within its temperature rating while the rotorcraft operates throughout its approved ambient temperature envelope. (For generator/alternator cooling test procedures, refer to paragraph AC 27.1351.) Section 27.1043(b) requires the maximum approved operating OAT to be at least 100° F for powerplant-mounted accessories such as starter generators, vacuum pumps, etc. Due to the impracticality of the 100° F hot day temperature limit, rotorcraft systems mounted on the powerplant are normally evaluated for at least 115° F hot day sea level conditions with corresponding 3.6° F/1,000-foot correction. The maximum hot day OAT at sea level must be specified in the rotorcraft flight manual. Section 27.1043(b) is the regulatory basis for the lapse rate of 3.6° F/1,000 feet. This lapse rate should be applied regardless of the hot day sea level temperature the applicant chooses to certify for operation.

(D) The § 27.1043(b) maximum ambient temperature definition should not be confused with operating temperatures in closed areas. Closed equipment rack areas can easily reach temperatures of 140° F when sitting on the ramp in the southern United States in midsummer. Normally, proper selection of the altitude temperature category in the latest revision of DO-160 will ensure compliance.

(E) In some cases, the equipment manufacturer furnishes temperature limits for internal critical parts. (For example, brushes, bearings, or field windings on DC generators.) In these cases it is better to record the critical component temperature rather than equipment or equipment environment temperature.

(F) The following will illustrate an acceptable high temperature evaluation method:

$T_{oat\ max}$ = Maximum outside air temperature at which temperature tests are conducted.

T_{max} = Maximum temperature to which the installed equipment has been tested in the laboratory.

$T_{test\ max}$ = Maximum installed equipment temperature recorded during tests.

T_{orh} = The high reference outside air temperature. It varies with altitude starting at the highest sea level temperature at which

rotorcraft operation is to be approved and decreases at 3.6° F/1,000 foot altitude. It can be no less than 100° F (reference § 27.1043(b)); however, it can be as high as the applicant wants.

$T_{h\ mar}$ = Temperature margin between the maximum equipment temperature substantiated in the laboratory and the maximum installed equipment temperature when the rotorcraft is operating in the highest available OAT and approximately corrected at the altitude under consideration. If the margin is zero or positive, the equipment passes. If the margin is negative, the equipment fails the test.

$T_{h\ mar} = T_{max} - (T_{test\ max} + (T_{orh} - T_{oat\ max}))$

Example #1: Assume the applicant is seeking approval for rotorcraft operation at the lowest acceptable OAT, at sea level, of 100° F and T_{max} for Generator Brush = 295° F at maximum load current throughout the altitude range. In-flight test data are:

Altitude (ft, MSL)	Measured Brush Temp ($T_{test\ max}$)	OAT = $T_{oat\ max}$
sea level	275° F	90° F
5,000	270° F	80° F
10,000	285° F	60° F
15,000	294° F	42° F
20,000	290° F	20° F

First, T_{orh} must be calculated for each altitude test point.

@ sea level, T_{orh} = 100° F
@ 5,000 ft., T_{orh} = 100° F -5,000 ft., x 3.6°/1,000 ft. = 82° F
@ 10,000 ft., T_{orh} = 100° F - 10,000 ft. x 3.6°/1,000 ft. = 64° F
@ 15,000 ft., T_{orh} = 100° F - 15,000 ft. x 3.6°/1,000 ft. = 46° F
@ 20,000 ft., T_{orh} = 100° F - 20,000 ft. x 3.6°/1,000 ft. = 28° F

Then at sea level:

$T_{h\ mar}$ = 295 - (275 + (100 - 90)) = 10° F

At 5,000 feet:

$T_{h\ mar}$ = 295 - (270 + (82 - 80)) = 23° F

At 10,000 feet:

$T_{h\ mar}$ = 295 - (285 +(64 - 60)) = 6° F

At 15,000 feet:

$T_{h\ mar}$ = 295 - (294 + (46 - 42)) = -3° F

At 20,000 feet:

$T_{h\ mar}$ = 295 - (290 + (28 -20)) = -3° F

Since $T_{h\ mar}$ comes out negative at the 15,000- and 20,000-foot points, the generator fails. It will be necessary for the applicant to reduce the maximum load current, improve cooling, or otherwise change the design to ensure the generator is operating within its approved temperature limit of 295° F.

(G) In most cases, the equipment is laboratory tested to minimum temperatures as severe as that of the rotorcraft's maximum certified altitude on a minimum temperature day. Therefore, unless equipment minimum temperature is affected by refrigeration or other temperature reducing environments, actual installed instrumented minimum temperature tests are unnecessary. If low temperature evaluation is necessary for the installed equipment, the following is an acceptable method:

$T_{oat\ min}$ = Minimum outside air temperature at which temperature tests are conducted.

T_{min} = Minimum temperature to which the installed equipment has been tested in the laboratory.

$T_{test\ min}$ = Minimum installed equipment temperature recorded during tests.

T_{orl} = The low reference outside air temperature. It varies with altitude starting at the lowest sea level temperature at which rotorcraft operation is to be approved and decreases at 3.6° F/1,000-foot altitude.

$T_{1\ mar}$ = Temperature margin between the minimum equipment temperature substantiated in the laboratory and the minimum installed equipment temperature. If the margin is zero or positive, the equipment passes. If the margin is negative, the equipment fails the test.

$T_{1\ mar} = -(T_{min} - (T_{test\ min} + (T_{orl} - T_{oat\ min})))$

NOTE: This equation assumes all temperatures are negative. It is necessary to place a (-) in front of the right side of the equation in order to convert the $T_{1\ mar}$ value to the conventional positive answer for acceptance and a negative

answer for rejection. Temperature in the zero to 32° F range can be handled by conversion to the centigrade scale.

Example #2: Assume the applicant is seeking a low temperature operating limit at sea level of -25° F. Assume the hydraulic control cylinder has been substantiated in the laboratory to operate at a cylinder temperature of -40° F. The in-flight test data are:

Altitude (ft, MSL)	Measured Cylinder Temp ($T_{test\ min}$)	OAT = $T_{oat\ max}$
Sea level	-0° F	-25° F
5,000	-9° F	-45° F
10,000	-21° F	-59° F
15,000	-32° F	-65° F
20,000	-40° F	-69° F

(T_{orl} must be calculated for each altitude test point)

@ sea level, T_{orl} = -25° F
@ 5,000 ft., T_{orl} = -25° F -5,000 ft., x 3.6°/1,000 ft. = -43° F
@ 10,000 ft., T_{orl} = -25° F - 10,000 ft. x 3.6°/1,000 ft. = -61° F
@ 15,000 ft., T_{orl} = -25° F - 15,000 ft. x 3.6°/1,000 ft. = -79° F*
@ 20,000 ft., T_{orl} = -25° F - 20,000 ft. x 3.6°/1,000 ft. = -97° F*

According to § 27.1043(b), the lowest temperature to be considered is -69.7° F.

Then at sea level:

$T_{1\ mar}$ = -(-40 -(0 + (-25 -(-25)))) = 40° F

At 5,000 feet:

$T_{1\ mar}$ = -(-40 - (-9 + (-43 - (-45)))) = 33° F

At 10,000 feet:

$T_{1\ mar}$ = -(-40 - (-21 + (-61 - (-59)))) = 17° F

At 15,000 feet:

$T_{1\ mar}$ = -(-40 - (-32 + (-69.7 - (-65)))) = 3.3° F

At 20,000 feet:

$T_{1\ mar}$ = -(-40 - (-40+ (-69.7 - (-69)))) = -0.7° F

It can be seen that there is an acceptable margin at all altitudes up to and including 15,000 feet. However, at 20,000 feet, the margin is negative and the system fails.

(ii) Vibration tests. Normally, installed vibration tests are not necessary for equipment qualified in accordance with the latest revision of RTCA document DO-160. This paper categorizes vibration tests according to installed rotorcraft equipment location such as fuselage, engine compartment, instrument panel, equipment rack, etc. However, installed equipment vibration tests may be necessary when it appears the equipment location environment may exceed the laboratory-tested equipment vibration limits.

(iii) Altitude tests. If the equipment has been laboratory tested to the maximum certified altitude of the rotorcraft, installed altitude tests are unnecessary. The installed equipment must be either laboratory tested or tested in the rotorcraft to the maximum certified altitude of the rotorcraft.

(3) Lightning Protection.

(i) Background. During the original design and development of rotorcraft and the development of regulations concerning these aircraft, little attention was given to protection from the meteorological phenomenon of lightning. This was, in part, because the early aircraft were constructed mostly of metal and had little, if any, dependence on advanced technology systems. Contemporary design normal category rotorcraft are utilizing the same advanced technology systems and materials as airplanes. Because of this fact, a specific requirement has been added by Amendment 27-21 for the consideration of lightning strike protection of required systems, equipment, and installations. The addition of paragraph (d) to § 27.1309 further defines the consideration required for the foreseeable operating condition of a lightning strike encounter on the rotorcraft.

(ii) Procedures.

(A) Section 27.1309(d) requires when showing compliance to § 27.1309(a) and (b) that the effects of lightning strikes on the rotorcraft must be considered. The first step in demonstrating compliance is to perform a fault/failure analysis (F/FA) to identify those functions for which the loss of function or malfunction may result in a catastrophe to the rotorcraft. An F/FA should be conducted on each system whose failure to function properly would prevent the continued safe flight and landing of the rotorcraft. These systems should be designed and installed to ensure that they can perform their intended function during and after exposure to lightning.

(1) Additionally, evaluation must be performed to identify each system whose failure to function properly would reduce the capability of the rotorcraft or the ability of the flight crew to cope with adverse operating conditions. These systems should be designed and installed to ensure that they can perform their intended function after exposure to lightning.

(2) The lightning strike models to be used for system justification should be as described in SAE AE4L Committee Report AE4L-87-3, Revision B, dated January 1989 or later version. The recommended reference for performing such analysis is Society of Automotive Engineers, Aerospace Recommended Practice 926A.

(B) Detailed means of compliance should be agreed with the authorities taking into account the effects on the rotorcraft and minimum considerations are as follows:

(1) Any combination of analysis and testing should be agreed with the authority.

(2) For test results, an extrapolation of the threat current parameters of more than a factor of 10 is not likely to be acceptable without an additional safety factor being applied.

(3) For a proven analysis technique, a safety factor of at least 2 will be necessary.

(C) Flight and engine controls are examples of “critical” functions and with these critical functions defined, an analysis and/or testing should be performed to show compliance with § 27.1309(a); i.e., equipment, systems, and installations performing those identified functions equipment, systems, and installations performing those identified functions should be designed and installed to ensure that they continue to perform their intended functions considering the conditions of the rotorcraft experiencing a worst-case lightning strike encounter. Section 27.610 contains some methods which may be utilized for less complex mechanical systems; however, a great deal of difficulty will be experienced in trying to use these criteria to demonstrate that a very complex avionic system complies with § 27.1309(a). A method as outlined in paragraph AC 27.1309b(4), “Lightning Strike Protection of Full Authority Digital Engine Controls,” is recommended. This method may be readily adapted to other avionic systems performing critical functions. Also, this identifies an acceptable quantification of the expected airborne environment. The next step involves expanding the F/FA to determine what probable malfunctions or failures of the installed equipment systems and installation may occur as a result of a lightning strike to the rotorcraft. For a twin-engine rotorcraft, these systems must be designed such that a failure or malfunction will not cause a hazard to the rotorcraft. For a single-engine rotorcraft, these equipment systems and installation should be designed to minimize hazardous effects of failures or malfunctions. Note that the analysis which determines what are probable malfunctions or failures should consider that the encounter with a worst-case lightning strike is a given event.

(4) Lightning Strike Protection of Full Authority Digital Engine Controls.

(i) Explanation.

(A) The following discussion is written specifically for full authority digital engine controls (FADEC) with an alternate technology backup fuel control installed on rotorcraft with Part 29 Category A engine isolation. The requirement for increased consideration of lightning strike encounter effects on avionic equipment and systems has been brought about by the increased use of avionics to perform functions, the failure or malfunction of which could result in a hazard to the rotorcraft. The susceptibility of current high technology avionic systems is increased by the use of large scale integration (LSI), very large scale integration (VLSI), and complementary metallic oxide silicon (CMOS) technologies which exhibit a greatly reduced tolerance to large amplitude, low energy electrical transients as compared to conventional bipolar technology, and the reduced physical protection and electromagnetic shielding afforded aircraft avionic systems by the advanced technology composite airframe materials. Additionally, processor-based systems have the failure phenomenon of digital upset. A digital upset occurs when a system, perturbed by an electrical transient, ceases proper operation in accordance with its embedded software while suffering no apparent component or device damage.

(B) Since elements of electrical/electronic engine subsystems are typically spread throughout much of the rotorcraft, transients caused by lightning are coupled into the subsystem interface cables and may damage the system or cause upset. Effective lightning protection must be designed and incorporated into these systems. Reliance upon redundancy as a means of protection against lightning effects is generally not adequate because lightning electromagnetic fields and structural IR voltages usually interact (to some extent) with all electrical wiring aboard a rotorcraft.

(C) The testing and analysis outlined in this discussion are methods by which the FAA/AUTHORITY may be assured that when the rotorcraft experiences “the foreseeable operating condition” of a worst-case lightning strike encounter that the electronically controlled engines will continue to “perform their intended function” and therefore be in compliance with § 27.1309 as installed.

(D) The definition of what constitutes a full authority engine control is not at this time clearly defined. However, it has been accepted in past certification that any control which relies upon the electronics for the function on which Civil Certification or Military Qualification is based (e.g., rotor speed governing) is a full authority control, regardless of the backup control mode provided. If engine certification or qualification can be achieved without the electronic control which is subsequently added to achieve improved operational efficiency in the aircraft, the control is “supervisory.”

However, if the controls used in a multiengine rotorcraft have a common failure caused by a lightning strike which could result in simultaneous failures which would cause a reduction in power greater than the loss of one engine, this would also be considered “full authority.”

NOTE: If OEI ratings are approved, cumulative loss of power from all engines must be limited to allow flight manual performance based on OEI ratings.

(ii) Procedures. Although not a regulatory requirement, it is recommended that a formal written certification plan be used to assure regulatory compliance. The use of this plan is beneficial to both the applicant and the FAA/AUTHORITY because it identifies and defines an acceptable resolution to the critical issues early in the certification process. These are the usual steps to be followed when utilizing a certification plan:

(A) Prepare a certification plan which describes the analytical procedures and/or the qualification tests to be utilized to demonstrate protection effectiveness. Test plans should describe the rotorcraft and FADEC system to be utilized, test drawing(s) as required, the method of installation that simulates the production installation, the lightning zone(s) applicable, the lightning simulation method(s), test voltage or current waveforms to be used, diagnostic methods, and the appropriate schedules and location(s) of proposed test(s).

(B) Obtain FAA/AUTHORITY concurrence that the certification plan is adequate.

(C) Obtain FAA/AUTHORITY detail part conformity of the test articles and installation conformity of applicable portions of the test setup.

(D) Schedule FAA/AUTHORITY witnessing of the test.

(E) Submit a final test report describing all results and obtain FAA/AUTHORITY approval of the report.

(iii) Definition of Environment. The SAE AE4L Committee report dated June 20, 1978, is an acceptable criteria to define the worst-case lightning strike which may be encountered by the rotorcraft in service. An additional explanation of the lightning environment may be found in FAA Report DOT/FAA/CT-89/22, “Aircraft Lightning Protection Handbook.” This handbook will assist aircraft design, manufacturing, and certification organizations in protecting aircraft against the direct and indirect effects of lightning strikes, in compliance with Federal Aviation Regulations. It presents a comprehensive test criteria to provide the essential information for the in-flight lightning protection of all types of fixed/rotary wing and powered lift aircraft of conventional, composite, and mixed construction and their electrical and fuel systems. The handbook contains chapters on the natural phenomenon of lightning, the interaction between the aircraft and the electrically charged atmosphere, the mechanism of the lightning strike, and the interaction with the airframe, wiring, and fuel system. Further chapters cover details of designing for optimum protection; the physics behind the voltages, currents, and electromagnetic fields developed by the strike; and shielding techniques and damage analysis. The handbook ends with discussion of test and

analytical techniques for determining the adequacy of a given protection scheme. On March 5, 1990, FAA Advisory Circular AC 20-136, “Protection of Aircraft Electrical/Electronic Systems Against the Indirect Effects of Lightning,” was issued. Appendix 3 of that document contains an updated quantification of the severe natural lightning environment. Additionally, an AIR-100 policy letter dated August 25, 1993, addressing multiple burst lightning strikes, should be considered. It is recommended that for new designs and applications after March 5, 1990, this revised definition of the lightning be used.

(iv) Certification Plan. The following subjects are not intended to provide a complete list of the items which should be included in the certification plan, but rather highlight some of the areas which should receive consideration. The certification plan should address the total protection which is required to allow the FADEC to continue to operate properly when the rotorcraft experiences a worst-case lightning strike encounter.

(A) Determination of Lightning Strike Attachments. Determine the locations on the rotorcraft where lightning strike attachment is likely to occur and the portions of the airframe through which currents may flow between attachments. The main and tail rotors are recognized as likely attachment points; however, consideration should be given to all possible attachment points. The swept stroke phenomenon may not exist for all lightning strike encounters due to the fact that the rotorcraft may be airborne with little or no airspeed.

(B) Establish the Lightning Environment. Establish the components of the total lightning event to be considered. These are the currents and voltages which are described in the definition of the environment.

(C) Full-Level, Complete Vehicle Testing. In accordance with traditional FAA/AUTHORITY Policy, the demonstration that the FADEC installed in a complete type design rotorcraft will continue to operate properly when exposed to a worst-case lightning strike is sufficient to demonstrate compliance with § 27.1309(a). Because of the difficulties involved in utilizing this type of an approach, it is generally not used.

(D) Analytical Processes. A description should be given in the certification plan of the analytical process and/or certification tests to be utilized to demonstrate protection effectiveness. Typically, the certification plan will include a combination of analysis and tests. (Analytical techniques are most often utilized to predict the levels of lightning-induced transients in interconnecting wiring.) In most cases, successful analyses are based upon well-defined geometrical or electrical parameters such as structural dimensions and materials resistivity. When electrical characteristics of structural materials are not well established, development tests are often utilized to obtain this data which is subsequently utilized in an analysis. In more complex structures and/or electrical/electronic system installations, it is sometimes difficult or impossible to define the problem in terms that can be analyzed. In these cases, development or verification testing is often relied upon. The purpose of the

certification plan is to show how developmental tests, analyses, and verification tests are combined to demonstrate protection design adequacy. In certain cases, previously verified designs can be incorporated and their adequacy confirmed by reference to previous verifications. Such reference should also be incorporated in the certification plan.

(1) The verification testing should be conducted on a system which simulates as closely as possible the installed configuration. As few items as possible of actual hardware should be simulated.

(2) The use of various analytical processes usually requires that the system component tolerance is established. The SAE AE4L Committee Report No. AE4L-81-2 is the recommended reference to be used for the testing accomplished to determine these tolerances. The testing which is performed to determine the tolerance level of the control computer should include a consideration for the occurrence of a nonrecoverable digital upset. One method to provide this consideration is to have the unit powered and the processor operating normally under software control (usually this should be the exact software for which approval is sought) when the test is performed. If strike testing is used, then several shots should be made to develop enough data to provide a reasonable confidence level. It is an acceptable procedure for the engine manufacturer, while he is obtaining his type certificate, to accomplish this bench testing to determine the level of tolerance of the FADEC system components to lightning encounter indirect effects. This approach has the advantages that the bench tests are not necessarily required to be repeated when the engine is installed in a different airframe. This recommendation is not meant to add a requirement to the engine manufacturer but to propose a more efficient method of certification. If this tolerance was not determined by the engine manufacturer, the applicant installing the FADEC in a rotorcraft would be expected to furnish this data.

(3) For complete airframe verification testing, a minimum level of at least 4KA peak and a current rise time of 2KA/microsecond are recommended. It is often difficult to obtain valid results at lower levels due to poor signal-to-noise ratios. When complete vehicle testing is accomplished at some lower level, or through some alternate test technique such as low level swept CW testing, consideration should be given to nonlinear airframe response, diffusion effects, and alterations in current paths caused by arcing and flashover.

(4) As with any analytical method, it is prudent to include a margin of safety to account for the uncertainties involved in the analytical and testing processes. A level of 6 dB is recommended for those analyses which are confirmed by the use of reduced level, full-scale vehicle testing. This safety margin is the difference between the airframe installed system responses and the system component tolerance, not an adjustment to the quantification of the atmospheric environment. (The airframe system response to the worst-case lightning event should be at least 6 dB less than the FADEC system computer and components tolerance level. Number of dB is defined as

20 LOG_{10} (V_1/V_2) and 20 LOG_{10} (I_1/I_2) where V_1 and I_1 are the determined tolerance levels of the system components and V_2 and I_2 are the extrapolated airframe response.)

(5) When an analysis has no associated full-scale vehicle testing to confirm the analysis, the analysis should be very rigorous. Additionally, it should be expected in this situation that this analysis indicates a very large margin of protection. Many factors must be considered in determining what constitutes an acceptably large margin. The specific additional margin required should be based on an assessment of the inherent uncertainty of a given analysis. Approximately an additional 25 dB of protection has been deemed acceptable for a reasonably rigorous analysis performed on an airframe for which the response characteristics are known.

(E) Pass/Fail Criteria. The certification plan should address a pass/fail criteria for the testing and analysis to be performed. The following items should be satisfied to assure acceptable system performance:

(1) No immediate crew action must be required.

(2) Automatic control of the engine cannot be lost for any appreciable period of time. The engine must not be allowed to be out of control for a period of time which will result in a hazard in a worst-case flight condition. Obviously, any rapid, uncontrolled divergence is not acceptable.

(3) No crew action should be required to reset the system. This is not to imply that the system cannot be designed with a manual reset, but the manual reset cannot be used to show compliance to recover from a digital upset.

(4) The resumption of engine control after an upset must be reasonably within the range which existed before the upset.

(5) No critical data can be lost.

(6) After the system recovers, if the performance of the system has been degraded in a noncritical manner which would reduce the capability of the rotorcraft or the ability of the pilot to cope with adverse operating conditions, then the crew must be alerted to this system degradation.

(v) System Installation Considerations. In most cases, the installation of the system components is a constituent part of the lightning protection. This is particularly true in the use of shielding techniques. If these installation features are required for adequate lightning protection, consideration should be given to ensure that their effectiveness is not derogated in service. Information should be made available to the parties who service and operate the rotorcraft to allow them to take actions necessary to ensure the continued effectiveness of the system lightning protection.

c. Failure Analyses.

(1) Power and distribution systems should be analyzed to show compliance with § 27.1309.

(i) One acceptable procedure for documenting the analysis is contained in Society of Automotive Engineers (SAE) Fault/Failure Analysis Procedure ARP 926A, revised November 15, 1979.

(ii) As a minimum, any analysis should consider the effect of failures of components and systems on the capability of the rotorcraft to perform its intended function without hazard.

(iii) The analysis should consider the indication of failure. Those latent failures that occur without indication should be considered in all possible sequences and combinations of additional failures until a positive indication of failure is provided.

(iv) The analysis should consider failure of indirectly related parts of installations which could induce failure in the system being analyzed; for example, the effect of hydraulic fluid sprayed on electrical components as a result of a ruptured hydraulic line. Another example is the result of a ruptured bleed air line and its effect on hydraulic, fuel, or electrical lines/cables.

(v) The Type Inspection Authorization (TIA) should call for specific simulated failures, evaluation of failure detection, failure warning, and performance of the remaining system on the ground and in flight to verify the critical aspects of the failure analysis. The applicant should provide a proposed detailed test procedure for incorporation in the TIA to accomplish this verification. The applicant's proposed tests simulating in-flight failures should be carefully reviewed by both the systems engineer and flight test pilot to assure the flight test crew will not be subjected to hazardous flight. Where practicable those simulated failures that would be hazardous in flight should be evaluated by ground tests. Analyzed and tested systems (where functioning is required) exhibiting hazards or failing to perform their intended functions under any foreseeable operating conditions must be redesigned to comply with § 27.1309.

(2) Utilization systems that are required or critical as to performance of intended function or result in rotorcraft hazard upon failure should also be analyzed for failures by the procedures of paragraphs c(1)(i) through c(1)(iv) above. Examples of systems that may be critical are autopilots, hydraulic control systems, navigation and flight instruments on IFR-approved rotorcraft, and bleed air systems.

d. Safety Assessment. The international safety community has contributed to several documents providing guidance for conducting safety assessments for civil airborne systems and equipment. "Safety assessment" is terminology commonly used in the aerospace industry and addresses all aspects of fault/failure/reliability analysis. Depending on the complexity and assessed criticality of the systems/equipment, the safety assessment can vary from a simple analysis which shows that there are no

catastrophic, hazardous/severe-major or major failure conditions, to a Functional Hazard Assessment (FHA) with the various analyses that may be required. Various analytical techniques may be used to assist the applicant and the FAA/AUTHORITY in conducting the safety assessment for the determination of compliance with the requirements. These analytical techniques are intended to supplement but not replace engineering and operational judgment. A safety assessment can be accomplished by several different methods. One method used in past certifications (Failure Analyses) is addressed in paragraph AC 27.1309c and is acceptable for showing compliance. Another method is the safety assessment process that contains the FHA addressed herein and is a methodology of general application to show compliance for systems, and all or parts of it may be applied as necessary depending on the complexity of design. The concept of safety assessment is provided in SAE document ARP 4754, "Certification Considerations for Highly-Integrated Systems," and this aspect of this document is endorsed as an acceptable way of showing compliance to the requirements for function/design assurance. SAE Document 4761, “Safety Assessment Guidelines for Civil Airborne Systems and Equipment,” can be used as a guide to perform the different analyses that form the safety assessment. The starting point is a FHA that identifies the assessed criticality of aircraft/systems functions. Further analysis is directed to be performed on the identified sources of these functions (i.e., system(s) or part of systems performing these function(s)). One of the most common directed analysis is the reliability analysis.

(1) Functional Hazard Assessment. The FHA is a top down assessment that, on an aircraft level, starts at flight operations and identifies the criticality levels associated with the malfunction/ failure of functions. The source of these functions can then be identified after completion of the FHA. There are five criticality levels defined in subparagraph f of this paragraph, ”Computer Software,” as they pertain to FAR Parts 27 and 29. These level definitions are used in the FHA to decide which level matches the malfunctions/failures under consideration. The bottom-up analysis is then directed to the identified function source. Reliability analysis is the most common of the bottom-up analysis.

(2) Reliability Analyses. Numerical Reliability Analyses may be developed, on an optional basis, as a continuation of the failure analysis procedure.

(i) Specific reliability numbers are not shown in § 27.1309. The necessary degree of reliability is a function of the criticality of the system under consideration. Acceptable sources of component failure rates are (1) military service records or handbooks, such as the latest revision of MIL-HDBK-217; (2) operator or manufacturer service records, such as airline records on sufficiently similar component designs; and (3) laboratory life tests.

(ii) For the purpose of conducting or evaluating an analysis, the following terms and numerical values should apply:

(A) FLIGHT TIME (Block Time). The time from the moment the rotorcraft first moves under its own power for the purpose of flight until the moment it comes to rest at the next point of landing.

(B) PROBABILITY CLASSIFICATIONS. Five new probability classifications are defined below, although three probability classifications have been used in past certifications. This is not considered a problem as long as the conversion below is applied, and it is recognized that only the divisions within the same range are different. Quantitative ranges are also provided as a common point of reference if numerical probabilities are used. The quantitative ranges given for these classifications are considered to overlap due to the inexact nature of probability estimates. When assessing the acceptability of a failure condition using a quantitative analysis, the numerical ranges given below should normally be interpreted to be the allowable risk for an hour of flight time based on a flight of mean duration for the rotorcraft type. However, when assessing a function which is used only at a specific time during a flight, the probability of the failure condition should be calculated for the specific time period and expressed as the risk for the flight condition, takeoff, landing, etc., as appropriate.

(1) FREQUENT. (This is the lower part of the range 10^{-5} or greater previously applied to the term “PROBABLE”.) Frequent events may be expected to occur several times during the operational life of each rotorcraft that is based on a probability on the order of 10^{-3} or greater.

(2) REASONABLY PROBABLE. (This is the upper part of the range 10^{-5} or greater previously applied to the term “PROBABLE”.) Probable events may be expected to occur several times during the operational life of each rotorcraft that is based on a probability on the order of between 10^{-3} to 10^{-5}.

(3) REMOTE. (The term “REMOTE” is not related to the structural use of the term.) (This is the lower part of the range 10^{-9} to 10^{-5} previously applied to the term “IMPROBABLE.”) Remote events are not expected to occur during the total operational life of a random single rotorcraft of a particular type, but may occur during the total operational life of all rotorcraft of a particular type that is based on a probability on the order of between 10^{-5} to 10^{-7} .

(4) EXTREMELY REMOTE. (The term “REMOTE” is not related to the structural use of the term.) (This is the upper part of the range 10^{-9} to 10^{-5} previously applied to the term “IMPROBABLE.”) Extremely remote events are not expected to occur during the total operational life of a random single rotorcraft of a particular type, but may occur during the total operational life of all rotorcraft of a particular type that is based on a probability on the order of between 10^{-7} to 10^{-9} .

(5) EXTREMELY IMPROBABLE. (Remains the same for both the three or the five classifications.) Extremely improbable events are so unlikely that they need not be considered to ever occur, unless engineering judgment would require their consideration. A probability on the order of 10^{-9} or less is assigned to this classification.

NOTE:

If a quantitative analysis is used to help show compliance with Regulations for equipment which is installed and required only for a specific operating condition for which the rotorcraft is thereby approved, credit may not be taken for the fact that the operating condition does not always exist. Except for this limitation, appropriate statistical randomness of environmental or operational conditions may be considered in the analysis. (However, the particular condition and probability of that condition should be agreed to with the FAA/AUTHORITY.)

The five probability terms defined in paragraph d(2)(ii)(B) above are intended to relate to an identified failure condition resulting from or contributed to by the improper operation or loss of a function or functions. These terms do not define the reliability of specific components or systems.

Generally, the guidance for Failure Analysis of paragraph c, is not required in its entirety for Category B, non-IFR rated rotorcraft. The only failure/reliability requirement is that no single failure can result in a hazard to the rotorcraft. This can usually be accomplished by a systems safety assessment that may or may not, depending on complexity and configuration, require a numerical reliability analysis.

e. Documentation. All laboratory tests, ground tests, flight tests, and failure analyses must be documented in sufficient detail to show compliance with § 27.1309 and included in the type design file. Section 21.31(a) provides the regulatory basis for requiring this documentation. If the applicant elects to use a numerical reliability/probability analysis it must also be documented in sufficient detail.

f. Computer Software. The latest standard for qualification of software is DO-178B; however, the use of DO-178A for a standard is not precluded at this time. Because of this dual standard situation, at this time, use of both standards will be addressed for qualification of software that is used for airborne systems and equipment certification.

(1) RTCA Document DO-178A

(i) RTCA Document DO-178A, “Software Considerations in Airborne Systems and Equipment Certification,” dated March 22, 1985, is a recommended standard to be used for the approval of system software. This document defines three levels of software; i.e., levels 1, 2, and 3. The level of the software is related to the consequence of a system malfunction caused by an error in the software. The criticality categories are:

(A) Critical - Functions for which the occurrence of any failure condition or design error would prevent the continued safe flight and landing of the aircraft.

(B) Essential - Functions for which the occurrence of any failure condition or design error would reduce the capability of the aircraft or the ability of the crew to cope with adverse operating conditions.

(C) Nonessential - Functions for which failures or design errors could not significantly degrade aircraft capability or crew operational cue.

(ii) The different software levels may be related to the criticality categories. Level 1 software, the most error free software, is usually required for critical functions. However, Level 1 software may sometimes be reduced by system architecture techniques such as the use of redundant (dissimilar) software performing the same function. Level 2 software is required for essential functions. It should be noted that those systems, equipment, and installations, with functioning required by 14 CFR subchapter C, are by this definition, essential functions. The criticality of the function should be determined by the use of a fault/failure or hazard analysis. The Society of Automotive Engineers Aeronautical Recommended Practice Document Nos. 926A and 1834 are the recommended references for performing these analyses.

CAVEAT: The user of DO-178A is cautioned by a caveat in Chapter 3 that for a certain class of systems, the techniques in DO-178A, Level 1 software are not by themselves sufficient consideration for reliance on system software to preclude a catastrophic event. Additional considerations are required with this class of system for software verification and validation (V&V) in addition to those required for DO-178A Level 1. This class of systems is one which has been called, “full flight regime critical.” An example of such a system is a fly-by-wire flight control. This system must perform its intended function through the full flight regime to provide for the continued safe flight and landing of the rotorcraft. For this system, software and system level validation beyond the scope of DO-178A are required. Also, DO-178A cautions the user against the assignment of probabilities of residual software errors. The conclusion of Special Committee No. 152 (The RTCA committee that wrote DO-178A) was that the present methods available for assigning “reliability” numbers to software do not yield credible results for certification purposes.

(2) RTCA Document DO-178B

(i) RTCA Document DO-178B, “Software Considerations in Airborne Systems and Equipment Certification,” dated December 1, 1992, is the latest standard and is recommended to be used for qualification and subsequent approval of system software. This document defines five levels of software; i.e., levels A, B, C, D, and E. The level of software is related to the criticality of the function that may be adversely affected by an error in the software. The criticality categories are as follows:

(A) Catastrophic - failure conditions that would prevent continued safe flight and landing.

(B) Hazardous/Severe-Major - failure conditions that would reduce the capability of the aircraft or the ability of the crew to cope with adverse operating conditions to the extent that there would be:

(1) A large reduction in safety margins or functional capabilities.

(2) Physical distress or higher workload such that the flight crew could not be relied on to perform their tasks accurately or completely.

(3) Adverse effects on occupants, including serious or potentially fatal injuries, to a small number of those occupants.

(C) Major - failure conditions that would reduce the capability of the aircraft or the ability of the crew to cope with adverse operating conditions to the extent that there would be, for example: a significant reduction in safety margins or functional capabilities, a significant increase in crew workload or in conditions impairing crew efficiency, or discomfort to occupants, possibly including injuries.

(D) Minor - failure conditions that would not significantly reduce aircraft safety, and would involve crew actions that are well within their capabilities. Minor failure conditions may include, for example: a slight reduction in safety margins or functional capabilities, a slight increase in crew workload, such as, routine flight plan changes, or some inconvenience to occupants.

(E) No Effect - failure conditions that do not affect the operational capability of the aircraft or increase crew workload.

(ii) The software levels are usually related to the criticality categories. Level A qualified software is the most error-free software and is usually required for functions that could exhibit catastrophic failures. However, additional considerations may moderate this direct relationship and allow some lower level of software qualification for higher function criticality categories. Some of the moderating factors may be architecture of the system/software, redundancy of systems using dissimilar software, hardware/software monitors, and independent function contributions. It is recommended that these practices are carefully employed and prior approval of the methodology should be obtained before the design is pursued. Typically, Level A is required for flight controls where the catastrophic criteria applies. Level B qualification is less than Level A and is employed in some flight controls and required flight instruments, where their malfunction would result in the hazardous/severe major critical category effect on the rotorcraft or its crew and occupants. Level C qualification is less than Level B and is employed in some required flight instruments commensurate with failure category “Major.” However, this lower level of qualification may be appropriate for either or both of the higher failure categories if the criteria can be met as discussed previously for level reduction. Level D qualification is less than Level C and is typically employed for required systems/equipment that do not exhibit the fault potential of the higher categories. Level E qualification is less than Level D and is employed in those

systems/equipment that are not required by the regulations. Examples are entertainment systems, powered seats, etc.

(iii) Although a rough correlation exists between software levels and criticality levels that in turn relate to a probability in numbers, these numbers cannot be applied to software to determine reliability. obtained by the processes delineated in DO-178B and at this time, have no correlation with probability.

g. High Intensity Radiated Fields (HIRF).

(1) Explanation. A regulatory project is active to add requirements for the protection of aircraft electrical and electronic systems from the effects of the HIRF environment. This effort is the result of technological advances in airframe and electronic systems design and a concurrent increase in the levels of radiated power in the aircraft environment. These changes have raised vulnerability to the electromagnetic environment of the electrical and electronic systems which perform critical and essential functions. In current type certification programs involving advanced electrical and electronic systems the authority has adopted special conditions to provide an adequate level of safety.

(i) The special conditions are directed toward the operation and operational capability of the installed electrical and electronic systems that perform critical functions. The applicant may demonstrate that these systems are not adversely affected when the aircraft is exposed to the HIRF environment, or as an alternative a laboratory test may be conducted, as discussed in the “Discussion” associated with each special condition. The laboratory tests would be conducted at a peak electromagnetic strength of 100 or 200 volts per meter, as appropriate, in a frequency range of 10 kHz to 18 GHz.

(ii) A definition of the HIRF environment is included in an FAA Aircraft Engineering Division Memorandum dated December 5, 1989, (Subject: High Energy Radiated Electromagnetic Fields (HERF) Interim Policy Guidelines on Certification Issues). SAE chartered a HIRF committee, SAE-4R, to define the HIRF environment for VFR and IFR aircraft, to prepare a Users Manual, and to submit a proposed advisory circular to the FAA. This committee has currently completed its task, except for the Users Manual and the rotorcraft VFR environment definition. The referenced FAA memo has been updated several times to reflect the latest SAE-4R recommended levels. The current revision of this memo is dated July 29, 1992.

(iii) If the laboratory test alternative is selected the 100 volts/meter level is considered appropriate for a function that is critical during IFR operations and the 200 volts/meter level is considered appropriate for a function that is critical during VFR operations. This is because the minimum en route altitude for IFR flight is 1,000 feet or 500 feet (FAA/AUTHORITY or ICAO), and rotorcraft operating VFR can and do operate regularly at lower altitudes. The attitude system is an example of a system performing a

critical function during IFR operation. A full authority digital engine control (FADEC) system is an example of a critical function during VFR and IFR operation.

(iv) JAA has issued a HIRF Interim Policy Paper to be used as JAA special conditions. This Interim Policy Paper was drafted by the Aviation Authority members of EUROCAE WG 33. The JAA Interim Policy requires full aircraft testing for systems performing Level A control functions and laboratory testing for Level A display, Level B, and Level C systems. The Interim JAA HIRF environment is the January 1992 environment used in INT/POL/25/2, with exceptions in the 2-4GHz and 6-8GHz bands. JAA guidance material for acceptable means of compliance is AMJ .1317.

(2) Procedures. It is recommended that the applicant present a plan to the cognizant FAA Aircraft Certification Office (ACO) for approval, outlining how the compliance with the HIRF requirements will be attained. This plan should also propose a pass/fail criteria for the operation of critical systems in the HIRF environment.

(i) A preliminary hazard analysis should be performed by the applicant for approval by the cognizant FAA ACO to identify electrical and/or electronic systems that perform critical functions. The term “critical functions” means those whose failure would prevent the continued safe flight and landing of the rotorcraft.

(ii) The systems performing critical functions that are identified by the preliminary hazard analysis are candidates for the application of HIRF requirements. A system may perform both critical and non-critical functions; however, the HIRF requirements only apply to critical functions. If redundant systems are used, all systems should be subjected to test/analysis for the HIRF requirements.

(iii) The latest revision of RTCA-DO-160, Section 20 is an appropriate reference for laboratory test procedures. In addition a separate advisory circular and users guide on the subject of HIRF is being drafted for the FAA by the SAE AE4R Subcommittee.

SUBPART F - EQUIPMENT

INSTRUMENTS: INSTALLATION

AC 27.1321. § 27.1321 (Amendment 27-13) ARRANGEMENT AND VISIBILITY.

a. Background. Part 27 contains specific requirements for instruments to allow pilots to operate the rotorcraft safely within authorized limits and to indicate system conditions. The instruments should be arranged for use by any pilot and must be readily visible to the pilot. Instrument location and arrangement, with respect to the pilot's seat, should be designed to accommodate pilots from 5'2" to 6'0" in height. Pilots within this range should be able to see and, where necessary, reach and operate all of the displays.

b. Procedures.

(1) When evaluating the location of the instruments for rotorcraft approved for VFR (IFR locations are discussed in paragraph AC 27 Appendix B), the flight, navigation, and powerplant instruments should be placed such that the pilot(s) can easily see and read the instruments when seated normally. Additionally, the instruments should be located so that the necessity for the pilot's head to turn is minimized.

(2) On multiengine rotorcraft, the required powerplant instruments should be grouped so there will be no confusion regarding which engine an individual gage represents. This is usually accomplished by mounting the engine gages in a vertical grouping. Identical parameter gages are placed next to each other and positioned from left to right in the same position and sequence as the engine location in the airframe.

(3) An evaluation should be made to determine that vibration of the instrument panel does not exceed the tolerances of the instrument. The instrument manufacturer will usually provide data which indicate the level of vibration for which the instrument has been qualified. The flight test evaluation of the rotorcraft should explore and determine that the vibration of the instrument panel does not affect the readability of the instrument. To meet these two criteria, it has been necessary in some installations to "shock mount" or otherwise isolate the instrument panel.

(4) The flight test evaluation should also determine that the flags or malfunction indicators of the instruments are readily visible in all combinations of lighting for approved kinds of operations.

AC 27.1322. § 27.1322 (Amendment 27-11) WARNING, CAUTION, AND ADVISORY LIGHTS.

a. Explanation.

(1) Cockpit devices are color-coded to symbolically represent various functions and varying levels of importance for flightcrew operation. From early times, an attempt has been made to take full advantage of associations developed early in life as a result of continuous exposure to our daily environment.

(2) Military design specifications were the first to reference color-coding in cockpit design requirements. In the mid-1940s, the CAA initiated the first color-coding requirements for civil cockpit design. Color-coding standards for cockpit visual signals soon followed. MIL-STD-411, May 31, 1957, identified three separate categories of light signals:

(i) Warning Light - indicates the existence of a hazardous condition which may require immediate corrective action.

(ii) Caution Light - serves to alert the operator to an impending dangerous condition requiring attention but not necessarily immediate action.

(iii) Advisory Light - indicates safe or normal configuration, condition of performance, operation of essential equipment, or attracts attention for routine purposes.

(3) Examples of warning and caution signals are included in later versions of the military standard, and a few of those are shown below:

Warning Signals	Caution Signals
Cabin Pressure Failure	Trim Failure
Fire	Fuel Low
Fuel System Failure	Generator Inoperative
Landing Gear Unsafe	Defrosting Failure

(4) Specific color designation for civil advisory lights was first addressed in Amendment 3 to the rotorcraft certification rules (Parts 27 and 29) on January 19, 1968, with adoption of new §§ 27.1322 and 29.1322.

(5) In a subsequent revision (Amendment 27-11), green lights were redesignated and additional colors introduced for flexibility in the requirement.

b. Procedures.

(1) Red shall be reserved for annunciation of emergency conditions requiring immediate corrective action. Typical examples include fire, transmission oil pressure, engine failure, and battery overheat. The use of red for annunciators which do not require immediate action must be avoided. Use of red when it is not needed tends to lessen the impact of a red annunciator and the needed pilot association for immediate action. In evaluating cockpit annunciators for acceptability, the FAA should ensure all annunciators which require immediate action are red and that only those requiring such action are red. If a master warning light is provided, it should be red, and it should be powered by the same signal that powers any of the individual red warning signals. An aural warning may accompany visual warning signals to enhance pilot response. Care should be taken that any aural signal is sufficiently distinct from other aural warnings, such as low rotor RPM to prevent confusion and to ensure proper crew response. A means to deactivate and reset the master warning (visual and aural) is required. Resetting the master warning must not deactivate any individual warning signal.

(2) Amber shall be reserved for indicating malfunction or failure conditions which do not require immediate crew action to ensure safe flight. Typical examples include door unlatched, inverter failure, generator failure, fuel filter clogged, and parking brake engaged. Amber should generally be utilized for malfunction and failure conditions which do not require immediate action. The key word here is “require.” Obviously, a pilot should perform corrective action for malfunction or failure conditions in a timely manner as soon as other cockpit priorities allow. The time increment associated with “immediate action” may vary with the system involved, the flight regime, and the aircraft; however, 15 seconds is a representative value in evaluating this term. This by no means indicates that any red annunciator can be ignored for 15 seconds. For red annunciators, some type of immediate pilot response is expected. If immediate pilot action is not required, the FAA should recommend the use of an amber designation. If a master caution light is provided in addition to a master warning light, the master caution annunciator should be amber, and should be powered by the same signal that powers any of the individual amber caution signals. Reset considerations for the master caution are the same as those detailed above for the master warning.

(3) Green signifies a safe operating condition and more specifically has come to signify landing gear extended and locked. Extensive use of green annunciators throughout the cockpit should generally be avoided due to possible confusion with the special use of green for landing gear. If green annunciators are physically and functionally removed from the landing gear operation, they may be found acceptable for a variety of “safe operating” applications. One such application is “all green for approach” used in autopilot, flight director, and other navigation system displays.

(4) Other colors may be utilized as advisory lights in accordance with § 27.1322(d). Red and amber must not be used as advisory lights due to the possibility of introducing confusion into the cockpit. Obviously, yellow and pink annunciators should be avoided due to their similarity to amber and red. White and blue have been successfully utilized as advisory segments in past civil designs.

(5) The primary test for designation of color is:

(i) Red - Is immediate action required?

(ii) Amber - Is pilot action (other than immediate) required?

(iii) Green - Is safe operation indicated, and is the indication sufficiently distinct to prevent confusion with the landing gear down indication?

(iv) Other advisory lights - Is the meaning clear and distinct enough to prevent confusion with other annunciations? Do the colors which are utilized differ sufficiently from the colors specified in paragraphs b(1), (2), and (3) above?

(6) Annunciator lights should be visible during bright daylight conditions. This should include visibility in direct sunlight unless lights are located in such a manner that direct sunlight cannot impinge on them.

(7) If dimming capability is provided, all annunciators, including master warning and caution, may be dimmable so long as the annunciation is clearly discernable for night operation at the lower lighting level. Undimmed annunciations have been found unacceptable for night operation due to disruption of cockpit vision at the high intensity. The dimming circuit should automatically revert to the high intensity setting when power is removed. Automatic dimming/brightening through the use of a photo cell is also acceptable, as are circuits which enable a dimming switch through a position light or other cockpit lighting controls.

(8) The use of flashing lights should be minimized. If a flashing feature is used, it should be controllable through pilot action so that flashing annunciation does not persist indefinitely. The indicator should be so designed that if it is energized and the flasher device fails, the light will illuminate and burn steadily.

(9) The activation of caution and warning lights should readily attract the attention of the appropriate crewmember while performing duties under both normal and high workload conditions.

c. Annunciator Panel Design

(1) Explanation.

(i) The annunciator panel design should be reviewed for the presence of failure modes that can cause illumination of multiple panel segments.

(ii) Many test circuits that are diode isolated are vulnerable to this condition. A typical sequence begins with the shorting of a test circuit diode. This failure is undetectable and goes unnoticed until an actual failure condition occurs which

causes the associated panel segment to illuminate. At this time all panel segments connected to the test circuit will illuminate.

(iii) This configuration becomes a special problem when one or more of the panel segments are red. A red light calls for immediate action by the crew, and the crew does not have adequate information for immediate action when many false panel segments are illuminated.

(iv) If the design review indicates a problem, a redesign of the panel to eliminate the condition is considered to be the best solution and is highly encouraged.

(2) Procedures.

(i) An alternative to panel redesign might be the following:

(A) Review the annunciator panel design and note which segments are red.

(B) Determine if cross reference information is available in the cockpit to allow elimination from consideration of any of the red segments (e.g., red low fuel pressure light and low fuel pressure gauge). Normal operation of the gauge would be a reason to assume the light did not cause the problem.

(C) Where a cross reference is available, further design review of that function is not necessary; however, it may be appropriate to include procedural information in the emergency procedures section of the rotorcraft flight manual.

(D) If cross references are not available for red segments, additional isolation should be incorporated into the annunciator design for those functions.

(ii) If cross referencing is not practical, the following approach is encouraged.

(A) Review the annunciator panel design and note which segments are red.

(B) Determine if isolation diodes are checked during the application of battery or external power before starting the engines (e.g., red low oil pressure light). If isolation diode is shorted, all panel segments will light as soon as battery or external power is applied.

(C) When the isolation diode can be checked before starting engines, further design review is not necessary.

(D) If diodes are not automatically checked before starting, then additional isolation, should be considered.

(3) Annunciator Panel Arrangement. The annunciator panels should be arranged in a logical manner to reduce the crew's time required to locate faults and to increase their efficiency in following aircraft flight manual procedures. For example, engine annunciators on multiengine rotorcraft should be physically located on the panel to coincide with engine location (left or right) so that properly operating engines are not inadvertently shut down due to crew confusion over which engine has malfunctioned.

AC 27.1323. § 27.1323 (Amendment 27-13) AIRSPEED INDICATING SYSTEM.

a. Explanation.

(1) The accuracy of all flight test data concerned with the velocity of the rotorcraft is dependent on the calibration of the airspeed indicating system. For this reason, the airspeed system position error should be determined very early in the program.

(2) Since air density varies with altitude, the speed reading will only be correct under standard sea level conditions. However, in an actual installation, the indicator reading, even under standard sea level conditions, may differ from the calibrated airspeed because the static system does not sense true static pressure. This error in detection of static pressure is called position error. It is caused by the pressure field built up around the rotorcraft in flight. This pressure field will vary in intensity with dynamic pressure making the position error a function of calibrated airspeed. Since airspeed information is presented to the crew in terms of indicated airspeed, it is necessary to determine the position error for the rotorcraft to be flown safely.

b. Procedures.

(1) There are different methods to determine position error such as trailing bomb, airspeed course, boom system, etc. Each method has its own advantages and disadvantages, but will yield satisfactory results if done correctly. The airspeed system should be calibrated throughout the airspeed range of the rotorcraft and under the various flight conditions of cruise, climb, and autorotation. In addition, the effects of gross weight and center of gravity should be investigated.

(2) It may also be necessary to recalibrate the system with a change in external configuration if such a change may affect the airflow near the pitot or static sources.

(3) Additional information regarding position error is included in paragraph AC 27 Appendix B b(10) and should be considered if pursuing an IFR approval.

(4) Static system installation information is included in paragraph AC 27.1325. Technical Standard Order (TSO) C16, Airspeed Tubes (Heated), gives minimum

performance standards for pitot tubes, and pitot tubes qualified to this TSO normally allow for a satisfactory aircraft installation.

(5) The calibration requirements of the standard seem to be self-explanatory and are not discussed further in this paragraph.

AC 27.1325. § 27.1325 (Amendment 27-13) STATIC PRESSURE SYSTEMS.

a. Explanation.

(1) This section, in conjunction with § 27.1323, provides minimum performance standards for static pressure systems. The standard provides some relief when considering the icing environmental condition in that it allows the use of an alternate static port to account for the icing condition.

(2) The standard for the consideration of environmental conditions is § 27.1309(a).

(3) The standard for consideration of malfunction conditions is § 27.1309(b).

(4) For rotorcraft that will be approved for IFR operation, the provisions of Appendix B VIII(b)(5) of Part 27 as discussed in paragraph AC 27 Appendix B should also be considered.

b. Procedures. The installation of the static system should consider the following:

(1) Static lines should be initially routed upward immediately behind the static pressure port. This procedure will minimize the entry of moisture into the system when operating in rain or washing the rotorcraft.

(2) Drain(s) should be located at low points in the system. Line routing and clamping should allow for all moisture that does enter the system to be routed to the drain(s).

(3) If independent systems are provided, the placement of each system component should allow for maximum practicable separation of each system. As much as possible, one system should be on one side of the rotorcraft and the second system on the opposite side.

(4) Most static pressure ports that are provided for IFR operation are heated. Before any tests are conducted, a program to qualify the heater on the port should normally be agreed upon through discussions between the FAA and the applicant. It is suggested that the requirements of TSO C16, Airspeed Tubes (Heated), be used as a guide for these discussions. If the ports are not to be heated, a comprehensive analysis should be prepared, and limited testing should be conducted to verify the analysis.

(5) Other static system considerations are included in paragraphs AC 27.1323 and AC 27 Appendix B.

AC 27.1327. § 27.1327 (Amendment 27-13) MAGNETIC DIRECTION INDICATOR.

a. Background. This section contains specific requirements regarding installation and functioning of a magnetic direction indicator. The magnetic direction indicator (commonly referred to as a compass) described by this paragraph is the unit required by § 27.1303(c) or the unit or system required for IFR operation by Appendix B VIII(a) to Part 27. Both of these indicators provide the pilot with an aircraft heading which is referenced to the earth's magnetic field. The unit required by § 27.1303(c) is the indicator commonly referred to as a "whiskey compass." The unit was given this designation because early units were constructed using alcohol as the medium in which the compass ball floats. This unit is generally approved as meeting the requirements of TSO-C7c. The indicator required by Appendix B to Part 27 is usually a system of units which meets the requirements of TSO-C6c.

b. Procedures. In showing compliance to § 27.1327(a), generally the magnetic indicator and its respective components will be tested to an appropriate standard such as RTCA DO 160B for use in a rotorcraft. If the unit functioned properly as described in the TSO during this testing, then no additional evaluation is generally required concerning vibration immunity. To determine the immunity of the indicator (system) from magnetic effects and its installed accuracy, a ground and flight test should be performed. This test should turn the rotorcraft a full 360° heading change in 45° increments. The indicator should not have an error in excess of 10° on any of the 45° increments. When performing these tests, the electrical equipment and systems should be functioning normally, and the effect of windshield heating (if installed) should be investigated. During this investigation, it is permissible for the error caused by the effect of the operation of electrical equipment on the indicator required by § 27.1303(c) to exceed 10° if a gyroscopic heading indicator is installed. This gyroscopic heading indicator may either be a directional gyro or a slaved compass system (gyro-stabilized magnetic direction indicator). The results of the investigation may be used to construct the calibration placard which is required by § 27.1547. It should be noted that a calibration placard has not been traditionally required for slaved compass systems. Also, it should be emphasized that other aspects of the functioning and installation of these indicators should comply with the other general requirements (i.e., §§ 27.1301, 27.1309, 27.1555, etc.).

AC 27.1329. § 27.1329 (Amendment 27-21) AUTOMATIC PILOT SYSTEM.

a. Explanation. The automatic flight control systems used on most modern rotorcraft often perform two different and distinct functions when viewed from a regulatory compliance aspect. These two functions are an augmentation of the stability of the rotorcraft and a pilot aid in maintaining attitude, altitude, and airspeed, or in radio navigation tasks. The first function of stability is not covered by § 27.1329 but is included under § 27.672. The second function as a pilot aid is the automatic pilot

function covered by this section. The following procedure discusses only those parts or systems which are installed as a pilot aid. Paragraph AC 27 Appendix B discusses the evaluation of stability augmentation systems.

b. Procedures.

(1) General.

(i) The automatic pilot system should be evaluated to demonstrate that it can perform its intended function of flying the rotorcraft and that it complies with the installation, operation, and malfunction requirements of § 27.1329. In demonstrating malfunctions of the autopilot system, generally servo actuator hardovers are the most critical malfunction. If this is the case and the autopilot system utilizes the same servos and servo amplifiers as the stability augmentation system (SAS) and the autopilot function cannot produce a more severe hardover than the SAS, then no additional consideration is required for this malfunction. An evaluation using the guidance in paragraph AC 27 Appendix B would be sufficient.

(ii) There have been autopilots approved which require the use of a monitor since they cannot meet the hardover malfunction requirements. These approvals have involved a finding of equivalent safety which is beyond the scope of this AC. Such findings of equivalent safety are made on a case-by-case basis. If an applicant is considering such a design, the applicant and the approving office should contact the Rotorcraft Standards Staff specialists for guidance.

(iii) The rule specifies that unless there is automatic synchronization, there should be some method to indicate the alignment of the actuating device to the pilot. The intent of this requirement is to provide a means such that the pilot does not inadvertently engage the system into a hardover condition. One method of achieving this has been the use of servo force meters. These meters monitor the current into the servo motor and indicate to the pilot if a signal is being sent to the servo prior to system engagement.

(iv) Various autopilot systems have used a preflight test to assure adequate reliability. The question which often arises is: Should the preflight test function be interlocked so that the autopilot cannot be engaged if the preflight test has not been accomplished? The guidance used in the past to answer this question is: If the preflight test is simple and rapid enough that the pilot may reasonably be expected to perform such a test, then it is not required to be interlocked. If, however, the preflight test is very complicated and lengthy and a pilot who was pressed by a schedule might skip such a test, then this preflight test should be interlocked.

(v) Most of the autopilots which have been approved utilize series actuators or servos such as those required for a SAS. However, this does not preclude the approval of an autopilot which uses outer loop parallel actuation. This type of autopilot may be particularly helpful in a VFR aircraft.

(2) Cockpit controls. Evaluation of the cockpit controls should include the following items:

(i) Location of the automatic pilot system controls are such that their operation is properly labeled and is readily accessible to the pilot(s).

(ii) Annunciator colors conform to the colors specified in § 27.1322 (reference paragraph AC 27.1322).

(iii) A determination is made that the controls, control labels, and placards are readable and discernible under all expected cockpit lighting conditions.

(iv) Motion and effect of the autopilot cockpit controls should conform with the requirements of § 27.779.

(v) Annunciation should be provided if the autopilot disconnects for any reason other than pilot action.

c. Malfunction Evaluations. To preclude hazardous conditions which may result from any failure or malfunctioning of the autopilot the following failures should be evaluated. This evaluation should also account for any hazards which also might be caused by inadvertent pilot action. The guidance in paragraph AC 27 Appendix B should be used to determine the appropriate reaction times of the human pilot to an autopilot malfunction.

(1) Climb, cruise, and descent flight regimes. The more critical of the following should be induced into the automatic pilot system.

(i) A signal about any axis equivalent to the cumulative effect of any single failure, including autotrim (if installed).

(ii) The combined signals about all affected axes, if multiple axes failures can result from the malfunction of any single component.

(2) The simulated failure and the subsequent corrective action should not create loads in excess of structural limits or result in dangerous dynamic conditions or deviations from the flight path. Additional guidance regarding the method of determining pilot recognition times and reasonable flight path deviations due to those simulated failures is contained in paragraph AC 27 Appendix B b(6). Resultant flight loads outside the envelope of zero to 2g will be acceptable provided adequate analysis and flight test measurements are conducted to establish that no resultant aircraft load is beyond limit loads for the structure, including a critical assessment and consideration of the effects of structural loading parameter variations (i.e., center of gravity, load distribution, control system variations, maneuvering gradients, etc.). Analysis alone may be used to establish that limit loads are not exceeded where the aircraft loads are

in the linear range of loading (i.e., aerodynamic coefficients for the flight condition are adequately established and no significant nonlinear air loadings exist). If significant nonlinear effects could exist, flight load survey measurements may be necessary to substantiate that the limit loads are not exceeded. The power for climb should be the most critical of: (1) that used in the performance climb demonstrations; (2) that used in the longitudinal stability tests; or (3) that actually used for operational climb speeds. The altitude loss should be measured.

(3) Maneuvering Flight. Malfunctions should also be induced into the automatic pilot system similar to paragraph c(1). When corrective action is taken, the resultant loads and speeds should not exceed the values contained in paragraph c(1). Maneuvering flight tests should include turns with the malfunction induced when maximum bank angles for normal operation of the system have been established and in the critical aircraft configuration and/or stages of flight likely to be encountered when using the automatic pilot. The altitude loss should be measured.

(4) Oscillatory Tests.

(i) An investigation should be made to determine the effects of an oscillatory signal of sufficient amplitude to saturate the servo amplifier of each device that can move a control. The investigation should cover the range of frequencies which can be induced by a malfunction of the automatic pilot system and systems functionally connected to it, including an open circuit in a feedback loop.

(ii) The results of this investigation should show that the peak loads imposed on the parts of the aircraft by the application of the oscillatory signal are within the limit loads for these parts.

(iii) The investigation may be accomplished largely through analysis with sufficient flight data to verify the analytical studies or largely through flight tests with analytical studies extending the flight data to the conditions which impose the highest percentage of limit load to the parts.

(iv) When flight tests are conducted in which the signal frequency is continuously swept through a range, the rate of frequency change should be slow enough to permit determining the amplitude of response of any part under steady frequency oscillation at any critical frequency within the test range.

(5) Recovery of Flight Control. Recovery of the rotorcraft should be accomplished by the pilot by first overpowering the malfunctioning autopilot and then disconnecting it. The control to disconnect the autopilot should be easily available to the pilot who is now resisting the malfunctioning force of the autopilot. It is recommended that the disconnect button be placed on the cyclic control. It should be red and conspicuously marked “Autopilot Disconnect.” The pilot should be able to return the rotorcraft to its normal flight attitude under full manual control without exceeding the loads or speed limits defined in this paragraph and without engaging in

any dangerous maneuvers during recovery. The maximum servo authority used for these tests should not exceed those values shown to be within the structural limits for which the rotorcraft was designed. The maximum altitude loss experienced during these tests should be measured.

(6) External Interfaces. The autopilot system should have appropriate interlocks to its engagement to ensure it does not operate improperly as a result of information furnished by an external device or system. An example of this is the navigation receivers and the compass system. If for a particular mode of operation the autopilot uses signals from these systems, the autopilot should be interlocked from operating in those modes if invalid information is being received from that system.

d. Automatic Pilot Instrument Approach Approval.

(1) Throughout an approach, no signal or combination of signals simulating the cumulative effect of any single failure or malfunction in the automatic pilot system, except vertical gyro mechanical failures, should provide hazardous deviations from flight path or any degree of loss of control.

(2) The aircraft should be flown down the instrument landing system (ILS) in the configuration and at the approach speed specified by the applicant for approach. Simulated autopilot malfunctions should be induced at critical points along the ILS, taking into consideration all possible variations in autopilot sensitivity and authority. The malfunctions should be induced in each axis. While the pilot may know the purpose of the flight, the pilot should not be informed when a malfunction is about to be or has been applied except through aircraft action, control movement, or other acceptable warning devices.

(3) An engine failure during an automatic ILS approach should not cause a lateral deviation of the aircraft from the flight path at a rate greater than 3° per second or produce hazardous attitudes.

(4) If approval is sought for ILS approaches initiated with one engine inoperative, the automatic pilot should be capable of conducting the approach.

(5) Deviations from the ILS flight profile should be evaluated as follows:

(i) The rotorcraft should be instrumented so the following information is recorded:

(A) The path of the rotorcraft with respect to the normal glide path.

(B) The point along the glide path when the simulated malfunction is induced.

(C) The point where the pilot indicates recognition of the malfunction.

(D) The point along the path of the rotorcraft where recovery action is initiated.

(ii) Data obtained from the point of the indicated malfunction to the point where the rotorcraft has either again intersected the glide slope or is in level flight will define the deviation profile. When changes to the aircraft autopilot configuration are made during the approach and these changes alter the deviation profile, additional data should be obtained to define each of the applicable deviation profiles. An example of a deviation profile is found in figure AC 27.1329-1.

(iii) Recoveries from malfunctions should simulate under-the-hood instrument conditions with an appropriate time delay between pilot recognition of the fault and initiation of the recovery at all altitudes down to 80 percent of the minimum decision altitude for which the applicant requests approval.

(iv) The minimum altitude at which the autopilot may be used should be determined as the altitude which results in the critical deviation profile becoming tangent with a minimum operational tolerance line. An example of this may be found in figure AC 27.1329-2. The 29:1 slope of the minimum operational tolerance line provides a 1 percent gradient factor of safety over the 50:1 obstacle clearance line. An additional factor of safety is provided by measuring the 29:1 slope from the horizontal at a point 15 feet above the runway threshold. It is recognized that this minimum altitude will vary with glide slope angle. Information regarding these variations should be obtained and presented.

(v) A malfunction of the autopilot during a coupled ILS approach should not place the aircraft in an attitude which would preclude conducting a satisfactory go-around or landing.

e. Servo Authority. The automatic pilot system should be installed and adjusted so the system tolerances established during certification tests can be maintained in normal operation. This may be assured by conducting flight tests at the extremes of the tolerances. Those tests conducted to determine that the automatic pilot system will adequately control the aircraft should establish the lower limit. Those tests to determine that the automatic pilot will not impose dangerous loads or deviation from the flight path should be conducted at the upper limit. Appropriate aircraft loadings to produce the critical results should be used.

f. Rotorcraft Flight Manual Information. The following information should be placed in the rotorcraft flight manual:

(1) In the Operating Limitations Section. Airspeed and other applicable operating limitations for use of the autopilot.

(2) In the Operating Procedures Section. The normal operation information.

(3) In the Emergency Operation Procedures Section.

(i) A statement of the downward flight path deviation in the cruise, climb, and descent configurations and the maneuvering flight configuration in accordance with paragraph d(5), if this deviation exceeds 100 feet.

(ii) True profiles of deviations below the glide slope or projected flare path for the critical conditions tested (reference paragraph d and figure AC 27.1329-1) and the deviation profile indicating the lowest altitude at which the autopilot can be used (reference paragraph d), if applicable, and if this deviation exceeds 100 feet or results in excessive deviation for an ILS approach.

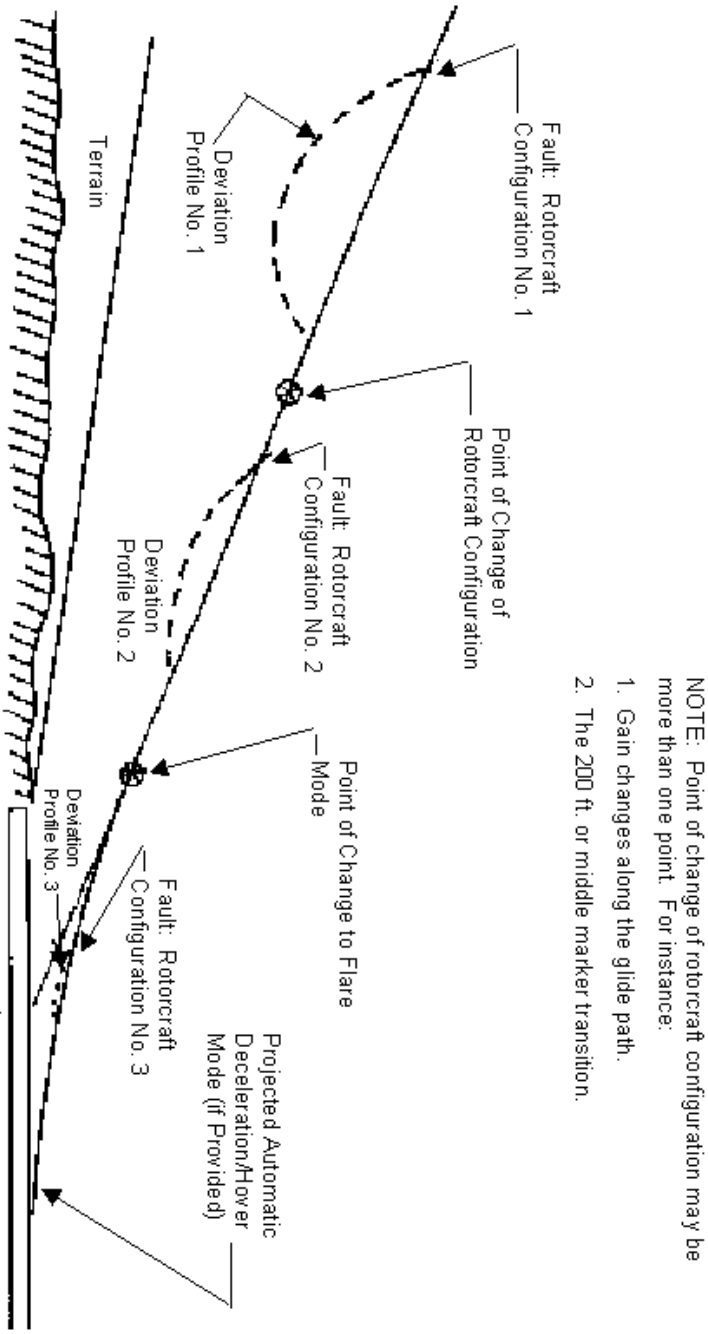

NOTE: Point of change of rotorcraft configuration may be more than one point. For instance:

1. Gain changes along the glide path.
2. The 200 ft. or middle marker transition.

FIGURE AC 27.1329-1 DEVIATION PROFILE

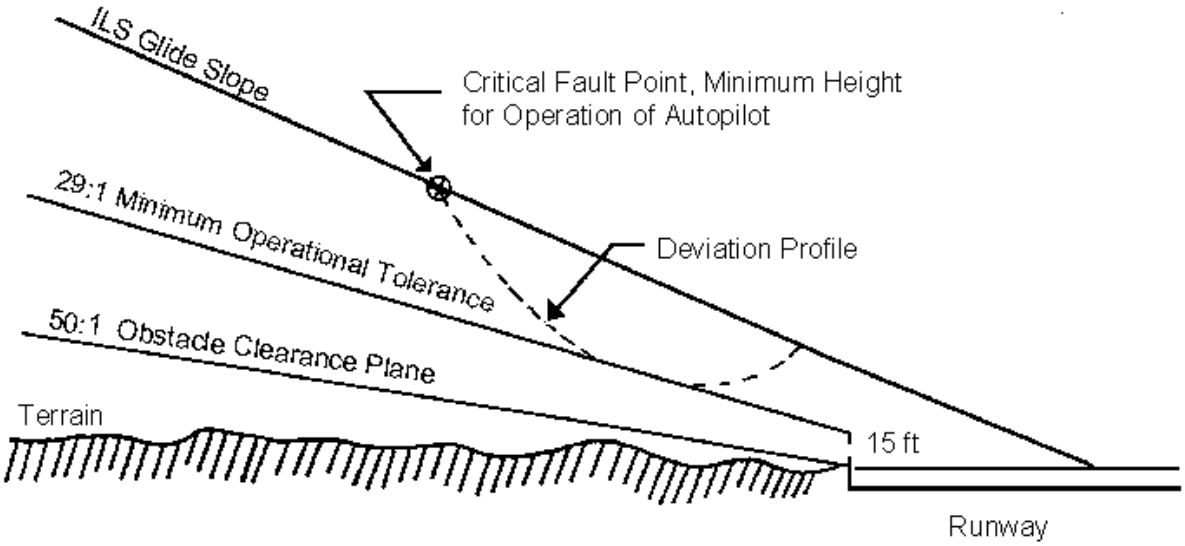

FIGURE AC 27.1329-2 OPERATIONAL LIMITATION

The minimum altitude at which the autopilot may be used should be determined as the altitude which results in the critical deviation profile becoming tangent with a minimum operational tolerance line. An example of this may be found in Figure AC 27.1329-2. The 29:1 slope of the minimum operational tolerance line provides a one percent gradient factor of safety over the 50:1 obstacle clearance line. An additional factor of safety is provided by measuring the 29:1 slope from the horizontal at a point 15 feet above the runway threshold. It is recognized that this minimum altitude will vary with glide slope angle. Information regarding these variations should be obtained and presented.

AC 27.1335. § 27.1335 (Amendment 27-13) FLIGHT DIRECTOR SYSTEMS.

a. Explanation. This section prescribes the accepted display criteria for a rotorcraft three-cue flight director providing command guidance for pitch, roll, and power. Three-cue flight directors for rotorcraft use the usual pitch and roll command cues with the third cue displayed on the left side of the attitude director indicator (ADI). These instruments can be used in either the two-axes or three-axes modes. In either mode, the lateral command cue controls the roll attitude, and the vertical command cue controls the pitch attitude. The rotorcraft attitude, controlled by the cyclic control, is changed to satisfy the flight director commands. The third cue, when displayed, commands collective pitch position and is used when an airspeed or pitch attitude mode and a vertical mode (altitude hold, glide slope, etc.) are selected.

(1) The general convention for flight director design is that each command bar is a “fly to” command. The motion of the flight director indicator is such to command a corresponding sense of control system motion. This is true of flight director pitch and roll commands and should hold true for additional commands such as collective pitch.

(2) Some consideration should be given to the collective, or third cue, display. For example, if the collective symbol is selected as the fixed index, the command cue and collective pitch control should move in opposite directions when collective pitch changes are made. This configuration would constitute a conventional “fly to” indicator. If the collective symbol is selected for the movable index, the direction of motion of the collective symbol will coincide with the direction of collective pitch changes. In this case the moving collective symbol does not comply with the “fly to” convention; however, this configuration has been approved by the FAA with special symbology, special background effects, and special color coding and has performed satisfactorily in service.

b. Procedures. The recommended display for a three-cue flight director incorporates the standard pitch and roll command symbols, either pitch and roll bars or the “V” bar display. The third cue, or collective symbol, should be located on the left side of the ADI. The shape of the moving cue and the background display should be unique to avoid being confused with a glide slope display or angle of attack display. One display uses a third cue, shaped like a small handle, to aid in identifying it as the collective pitch symbol.

(1) The color of the pitch and roll command indicators, the aircraft symbol, the background marking of the third cue, and third cue itself, should be consistent. The optimum color scheme uses the same color for the aircraft symbol and the collective symbol. This is usually fire orange. The command cues including the collective cue also should use the same color, usually yellow. The rationale for the different colors is that the aircraft symbol and the collective symbol (the same color) are moved toward their respective command cues. If the pitch command cue is above the center, the aircraft symbol is raised (nose pulled up) and, if the collective command cue is above the collective symbol, the collective pitch is raised, moving the collective symbol towards the command cue.

(2) If the attitude director indicator (ADI) provides a monochromatic display, the collective pitch cue and its background markings must be distinctive to reduce the chance of being confused with the glide slope indicator. This can be accomplished through the use of different shaped cues and background marks. A round cue with a chevron-shaped background marking has been satisfactory.

AC 27.1337. § 27.1337 (Amendment 27-12) POWERPLANT INSTRUMENTS. PARAGRAPH (b) - FUEL QUANTITY INDICATOR.

a. Explanation. Section 27.1337(b) requires, in part, a means to indicate to the flightcrew the quantity of useable fuel in each tank. Since the flight attitude of a rotorcraft may vary significantly with CG (center of gravity) and airspeed, several attitudes for calibration of the fuel gage may be appropriate. Accordingly, the manufacturer should review the operational envelope (with respect to attitudes) and select at least three attitudes for gage calibration with the provision that these attitudes should be useful to the intended operation of the rotorcraft and demonstrate gage accuracy (within limits suggested herein). Selection of ground attitude for one of these conditions may, in some cases, be appropriate.

b. Procedures.

(1) Determine the rotorcraft pitch attitudes for most forward and most aft CG at a median gross weight and at an airspeed of 0.9 V_{NE} or 0.9 V_H, whichever is less. The mean attitude of the extremes defined above, further adjusted for lateral CG effects, if necessary, define the rotorcraft attitude for fuel gage calibration.

(2) After establishing the calibration attitude, the requirements of § 27.1337(b) can be accomplished. The aircraft should be placed in the calibration attitude. Add fuel to the filler neck spillover level. Defuel the aircraft in increments corresponding to fuel gage increment markings or at least 10 increments until gage zero is obtained. Precautions should be taken during this step to be sure that the fuel transmitter is sensing fuel level and not simply reflecting a physical “STOP” or end point in the system range. The fuel remaining in the tank below the “ZERO” mark must not be less than that amount determined by flight testing under § 27. 959. (Otherwise, the zero point must be adjusted upward.) The gauging system accuracy is acceptable when it meets a tolerance of ±2 percent of the total useable fuel plus ±4 percent of the remaining usable fuel at any gage reading, provided that the gage indicates zero fuel with unusable fuel in accordance with § 27.959 in the tank. (For a 100-gallon tank this formula would allow a ±6-gallon error at the full level, ±4-gallon error at 50-gallon level, converging to a ±2-gallon error at low fuel with the further provision that the zero mark accurately reflects unusable fuel.)

(3) Certain other aspects of a fuel gauging system need attention in order to minimize fuel exhaustion incidents:

(i) Gage reading with the aircraft at ground attitude is frequently used by the crew in calculating range, weight and balance, and actual gross weight. Significant gage errors in either direction during this reading can introduce hazards to the operation of the aircraft. If a calibration at this attitude indicates an unconservative error in excess of 6 percent of the gage reading, corrective information should be applied adjacent to the fuel quantity gage or be made available to the crew in other handbook data.

(ii) Flight during hover with maximum rearward wind may introduce significantly different fuel gage readings. A check should be made to ensure that the gage is either accurate or at least does not read high (unconservative) in this attitude.

(iii) If external loads are approved, the attitude for this type of operation should be considered.

(4) Fuel gauging system transmitters which are strictly volumetric measuring devices (float-actuated variable rheostats) introduce a gage readout error of about 5 percent if calibrated with a fuel temperature of 0° C and subjected to -55° C fuel or +55° C fuel. This error may be minimized by calibrating the gage with fuel temperature in the middle of the useful range; i.e., 15° C. These types of gauging systems should be recalibrated during periodic major maintenance intervals. The manufacturer should be urged to include procedures and requirements for this in the “Instructions for Continued Airworthiness” for the model rotorcraft.

(5) Capacitance transmitters have become the standard for most modern fuel systems. These transmitters ordinarily need no temperature compensation since the fuel volume and the fuel dielectric constant vary inversely as temperature changes. The basic capacitance transmitter does not compensate for the different dielectric values to be expected with different type fuels. An add-on capacitance located where it will be submerged in fuel at all times can be devised to automatically compensate for other fuels.

AC 27.1337A. <u>§ 27.1337 (Amendment 27-23) POWERPLANT INSTRUMENTS</u>.

a. <u>Explanation</u>. Amendment 27-23 adds § 27.1337(e) that requires certain rotor drive system transmissions and gearboxes to be equipped with chip detector systems. These detectors will sense and signal the presence of ferromagnetic particles to the flight crew. This amendment will improve the level of safety available with the installation of chip detector systems.

b. <u>Procedures</u>. All of the policy material pertaining to this section remains in effect. Additionally, the following information is added about chip detectors. The chip detectors should:

(1) Indicate the presence of ferromagnetic particles in the transmission or gearbox;

(2) Be easily removable for inspection of the magnetic poles for metallic chips; and,

(3) Prevent the loss of lubricant in the event of failure of the retention device for the removable portion of the chip detector (debris monitor).

[The remainder of this page intentionally left blank.]

[This page intentionally left blank.]

SUBPART F - EQUIPMENT

ELECTRICAL SYSTEMS AND EQUIPMENT

AC 27.1351. § 27.1351 (Amendment 27-13) ELECTRICAL SYSTEMS AND EQUIPMENT--GENERAL.

a. Explanation. With the advent of more sophisticated rotorcraft and operations under more critical conditions, such as IFR and icing, it is essential that the electrical system be very carefully analyzed and evaluated to assure proper operation under any foreseeable operating condition and that hazards do not result from any malfunctions or failures.

b. Procedures.

(1) Electrical System Capacity. Rotorcraft electrical systems have grown in capacity, complexity, and impact on safety. This paragraph requires adequate electrical system capacity for safe operation of load circuits essential for safe operation at continuous rated power. If this capacity can be shown by electrical measurements, an electrical load analysis is not required. However, if the measurement method of compliance is chosen, data should be provided to show that the measured loads represent the worst case electrical loading for components or combination of components.

(i) Load circuits (systems) that are essential for safe operation are those systems necessary to maintain controlled flight and land safely and are generally those systems required to show compliance with the certification regulations. This includes most electrical utilization systems.

(ii) An electrical utilization system is a system of electrical equipment, devices, and connected wiring using electric energy to perform a specific aircraft function.

(iii) The specific utilization systems, which are necessary to maintain controlled flight and land safely, will vary with the type of rotorcraft and with the nature of operations. Examples of systems which may be essential are basic flight instruments, minimum navigation equipment, minimum radio communications, and flight control systems.

(2) Function.

(i) Generating systems should be analyzed, inspected, or tested to ensure that no probable malfunction in the generating system or in the generator drive system may cause loss of service to systems essential for safe operation. A probable malfunction is any single electrical or mechanical component malfunction or failure that

is likely to occur based on past service experience. This past service experience can include malfunction of components of previously approved rotorcraft, other aircraft, or qualitative analysis of similar components in rotorcraft applications. Analyses should be performed on the electrical power system emphasizing the exclusion of single point failures and the possibility of latent failures. Test methods should be developed that uncover latent faults. To identify latent failure causing events, consider the functions and the results of the safety analysis, as well as any failure detection monitor that may be incorporated. Evaluate the system using various combinations of unforeseen internal signal patterns and states. Also, evaluate the non-monitored functions by selecting test conditions that use every signal path and decision point between the input and output. Refer to MG-2 for electrical system test methods. These analyses should be extended to multiple malfunctions when:

(A) The first malfunction would not be detected during normal operation of the system, including periodic checks established at intervals which are consistent with the degree of hazard involved; or

(B) The first malfunction would inevitably lead to other malfunctions.

(ii) The generator drive system includes the prime movers (propulsion engines or other) and coupling devices such as gearboxes or constant speed drives.

(iii) Where crew corrective action is necessary:

(A) Adequate warning should be provided for any malfunction or failure requiring such corrective action;

(B) Controls should be located to permit such corrective action during any probable flight situation;

(C) If corrective action must be taken within a specified time to continue safe operation of the generating system, it should be demonstrated that such corrective action can be accomplished within the specified time during any probable flight situation; and

(D) The procedure to be followed by the crew should be detailed in the Rotorcraft Flight Manual.

(iv) Chapter 11 of Advisory Circular 43.13-1A, "Acceptable Methods, Techniques, and Practices; Aircraft Inspection and Repair," includes guidance on installation of electrical systems (routing, separation, tying, clamping, j-box installations, etc.). Special emphasis should be placed on wire routing during the rotorcraft compliance inspection. Control wires to the rotorcraft's generators should be routed separately from generator output wiring. This should begin at the generator and continue to the voltage regulator. Additionally, wiring installation design should be

documented sufficiently to maintain configuration control for manufacturing and to assure that the electromagnetic characteristics remain the same as the certification sample.

(3) Generating System. When electrical power is needed for essential equipment, this paragraph requires at least one generator with adequate capacity for safe operation. Complete electrical failures have been caused by loss of voltage control in the voltage regulator. Overvoltage conditions can destroy electronic equipment. An acceptable method of overvoltage protection is the use of a separate overvoltage sensing relay to trip the generator off the line when overvoltage is detected. Another acceptable method is use of a voltage regulator with built-in overvoltage protection.

(4) Generator Ratings: Generator ratings are often the result of installation temperature limitations. The determination of these limitations, if any, is by testing the actual installation. The procedures for performing generator cooling tests are as follows:

(i) Test Requirements.

(A) General. The applicant should contact the generator (alternator) manufacturer and obtain the maximum limits (continuous, 2 minute intermittent and 5 second transient maximum limits) for the unit to be tested. This will normally be in terms of temperatures at various locations within the unit (stator, bearings, diodes, heat sinks, brushes, etc.) or in terms of pressure drop across the generator. The manufacturer should either supply an instrumented unit or give complete details for instrumenting the test unit.

(B) Instrumentation.

(1) Load Bank. A load bank will usually be necessary to load the test unit to the amperage limit for which approval is requested.

(2) Ammeter. An ammeter should be provided with sufficient resolution to assure the amperage load is being maintained at the desired level.

(3) Temperature/Pressure Readouts. Readouts which are compatible with the temperature or pressure sensors installed in the test unit should be provided.

(4) Calibration Records. Calibration records should be available for all instrumentation.

(5) Recordings. Permanent recordings should be provided for time, temperatures, current, and/or pressure. The recording device should have provisions for placing event marks on the recording medium.

(C) Regulatory References. Sections 27.1301, 27.1309, 27.1351, 27.1521(f), 27.1041, 27.1043, 27.1045 (through Amendment 27-19).

(D) Miscellaneous. The results obtained from the tests should be corrected for hot-day conditions using a standard lapse rate (3.6° F/1,000 feet). The tests are conducted to determine the maximum generator capacity that does not result in surpassing the limits given from the manufacturer. This is for a continuous rating, any credit for short time over current ratings must also be verified by the same methods, particularly for short time ratings longer than 5 seconds.

[The remainder of this page intentionally left blank.]

[Section AC 27.1351 continued on the next page.]

(ii) Test Procedures.

(A) Single-Engine Procedure.

(1) The cooling test is to be conducted during ground operation, climb-out, cruise, approach, and hover flight regimes.

(2) All ground operational and in-ground-effect hover tests should be conducted in ambient winds of 5 knots or less.

(3) The battery may be connected to the bus during the generator/alternator cooling test. The generator/alternator temperatures should be recorded at intervals sufficiently close to show the rate of temperature increase and stabilization. The temperature may be considered stabilized when it peaks and has not increased in the last 5 minutes. The climb-out speed and power setting should correspond to the best rate of climb speed, using maximum continuous power or any other normal conditions of climb that would cause the generator/alternator temperatures to be critical. The cruise test should be conducted at maximum altitude in the cruise configuration. Generator/alternator cooling should be conducted at rated output consistent with the RPM at which it is operating. For instance, during the ground tests the engine RPM may be lower than that necessary to sustain maximum rated amperage output. In this case the maximum amperage output of the generator/alternator corresponding to the lower RPM should be assured.

(4) The test sequence should begin with about 30 minutes of ground operation to account for taxi and holding times and end 5 minutes after all temperatures have peaked after engine shutdown.

(B) Multiengine Procedures. Conduct a generator cooling test in accordance with the following procedures:

(1) All ground operational and in-ground-effect hover tests should be conducted in ambient winds of 5 knots or less.

(2) After engine start, load the instrumented generator to its proposed amperage limit and begin recording temperatures.

(3) A total of 30 minutes should be spent on the ground prior to takeoff. This is to account for taxi and holding times.

(4) After takeoff, climb at single-engine, best-rate-of-climb speed using maximum continuous power, to the single-engine service ceiling. Above this, continue at twin-engine, best-rate-of-climb speed, using maximum continuous power on both engines, to maximum altitude.

(5) Cruise at maximum altitude until all generator temperatures stabilize. Temperatures shall be considered stabilized when they have peaked and have not increased for a period of 5 minutes.

(6) Descend, conduct an approach to include a go-around, hover until temperature stabilizes, then land and continue to record temperatures after shutdown until 5 minutes after all temperatures have peaked.

(7) Conduct cooling tests with the rotorcraft hovering at both the minimum and maximum hover altitudes.

(8) Correct all results for hot day conditions. Use the standard lapse rate of 3.6° F/1,000 feet for consideration of altitude. See paragraph AC 27.1309b(2)(i) for details on temperature correction.

(C) Manufacturer's Limits. If at any time during the testing it appears the manufacturer's limits are to be exceeded, the amperage load on the test generator/alternator should be reduced to prevent this from happening.

(D) Miscellaneous. The results obtained from the tests should be corrected for hot day conditions using a standard lapse rate (3.6° F/1,000 feet). The tests are conducted to determine the maximum generator capacity that does not result in surpassing the limits given from the manufacturer. This is for a continuous rating; any credit for short time over current ratings must also be verified by the same methods, particularly for short time ratings longer than 5 seconds.

(5) Instruments. Voltage and current supplied by each generator are parameters which define system operation. Some systems are provided with voltmeters and ammeters to display these parameters to the crew. These instruments may be multifunctional with switches to select the functions displayed. Some designs have annunciated safe operation of each generator with lights and have no voltmeter and ammeter. If additional limitations, such as maximum loading of portions of the systems, are necessary to account for fault condition, that information should be made available to appropriate personnel (crew, owner, modifier, etc.) to ensure the limits are not exceeded.

(6) An external power source supplying reverse polarity or reverse phase sequence to the rotorcraft electrical system could seriously damage the system. This paragraph requires a means to prevent such an occurrence. This can be accomplished by use of a standard polarized receptacle and protective relays.

AC 27.1353. § 27.1353 (Amendment 27-14) STORAGE BATTERY DESIGN AND INSTALLATION.

a. Explanation. Batteries must not be designed and/or installed to create a hazard to the rotorcraft under any operating conditions.

b. Procedures.

(1) Battery General. As part of the electrical system evaluation, the battery installation should be reviewed to ensure the battery is vented and drained. If there is some doubt regarding the ability of the drain to satisfactorily dispose of corrosive fluids, TIA tests should be conducted to resolve the issue. Normally this is done by expelling a dye solution through the drain system during different phases of flight to ensure that fluids are drained clear of the rotorcraft. Some aircraft rely on the installation of a sump jar to dispose of corrosive fluids.

(2) Battery Installation. Installation approval of batteries consists of two parts. One part is the approval of the battery itself to performance specifications that meet the helicopter's requirements and the other part is the actual installation of the battery into the helicopter. The following methods of showing compliance can be demonstrated by a combination of tests and analysis.

(i) Approval of the battery for installation is dependent on the helicopter's requirements for the installed equipment and operations.

(A) The battery's capacity must be sufficient to supply the required current, at a voltage level that allows proper operation of the equipment/functions dependent on battery power. This capacity must be shown to be sufficient, at the proper voltage levels, for all operational and environmental conditions. Helicopters approved for IFR operations require sufficient battery power to operate a minimum set of required equipment for a time long enough to find a suitable place to land and effect a safe landing. The minimum time for IFR is 30 minutes. Additionally, for helicopters that employ electrical power for starting, the battery must have sufficient capacity to provide adequate engine starting on the ground, and also to have the capability to provide power for the air start function, when required. The power requirement for air start could have high-level safety considerations depending on the helicopter's power distribution system and the number of engines.

(B) The battery should be selected with the knowledge of the type of charging that will be supplied to it from the helicopter. The type of charging will be a major factor to determine the number of cells that the battery should contain. If the battery is not adequately charged, the capacity may not be available, when required, to meet emergency power demands. Twenty cell NI-CAD batteries have been used for several years to prevent thermal runaway; however, aircraft bus level voltage may not be an adequate source to properly charge a 20 cell Ni-CAD battery. The nominal voltage of a Ni-CAD cell is 1.5 volts and if the number of battery cells is 20 then; 1.5 Volts/Cell X 20 Cells = 30 volts required to even match the nominal voltage of the installed battery. (This is actually inadequate to charge the Ni-CAD cell as a few tenth volts above that of the nominal voltage is required.) The maximum helicopter bus voltage available is typically 28.5 volts, which is deficient by 1.5 volts to just meet the nominal battery voltage. A compensating factor for this battery charging design is to

require frequent battery maintenance activities. Future battery installation designs should not depend on the use of frequent battery maintenance as a compensating factor for designs that are inherently deficient in battery charging capability. Battery charging from the helicopter bus voltage is the prevalent method used to charge batteries, since no separate battery charger is needed. However, for the 20 cell Ni-CAD example, using the helicopter bus voltage as the battery charging source can introduce battery capacity limitations. Several options are available to address these concerns. One option would be to go to a 19 cell battery. Since Ni-CAD batteries were first introduced, much has been learned about their care and use, plus design improvements have been made that lessen the possibility of thermal runaways. Another approach could be to oversize the battery capacity recognizing that the battery will be in a "less than" nominal capacity condition. This philosophy would also carry with it a Certification Maintenance Requirement as a limitation on the helicopter approval. Compliance could be shown by using a dedicated battery charger, that can profile the charging based on state of charge. This can be much more efficient and make it possible to have a better charged battery with less frequent maintenance, and increased battery life.

(C) One of the significant design issues associated with batteries is the internal impedance. Low internal impedance usually characterizes batteries capable of high discharge rates. Starting and fault clearing requirements are typically best satisfied by batteries with low internal impedance. The other extreme is batteries with high internal impedances that are generally more economical and perform low rate, long-time interval discharges well. This type of batteries can provide the emergency power for equipment efficiently. If both starting/fault clearing and emergency power requirements are to be provided using a single battery, a workable compromise on the internal impedance must be accomplished.

(D) The battery must be qualified to the helicopter’s defined environmental specifications associated with the battery installation location, as a minimum. High level environmental qualification may preclude the installation location dependency for the battery. In addition to the environmental qualification, the design/installation design should consider the risk of explosion presented by the natural production of gases. An explosive resistant case or container is an acceptable way of showing compliance to the rule requiring that the structure and essential systems do not suffer hazardous effects. There may be other ways to show compliance, but use of the explosion-resistant case is the predominant way at this time.

(ii) The part of the battery installation approval associated with installation into the helicopter should consider the adequacy of the associated battery interface components and the physical aspects of installing the battery.

(A) The adequacy of the associated components that are necessary to interface with the battery to provide functionality must be shown to perform their intended function for the installation environment and operations. These components should be qualified to meet the most severe environment of their installation and

operate properly within all specified limits. Operational specified limits may be set by battery charging in-rush currents or possible fault currents.

(B) A battery charge control system may be used that automatically controls the battery charge to prevent battery overheating. Unless otherwise specified by the battery manufacturer, temperatures above 140° F are considered overheat for NI-CAD batteries. The system is acceptable if the charge rate is automatically adjusted by controlling the charging current as a function of battery temperature, and in an over-temperature condition, the charge current is automatically reduced to a safe value. Zero to 10 amperes has been considered safe for batteries rated at less than 34 amp-hours, and zero to 15 amperes has been considered safe for batteries rated at 34 amp-hours or more. The actual number chosen should be substantiated. Means and/or procedures should be provided for the crew to monitor the charger performance or the battery condition. If there is an automatic disconnect of the charger from the batteries and associated bus on an over-temperature condition, provisions should be provided in the cockpit to warn of a disconnect.

(C) If a temperature monitoring system is used, the temperature sensor should be located in a position that will most accurately reflect the internal battery temperature without causing adverse effects to the sensor. The location normally used is near the center of the battery. If the sensor is placed between two cells, the indication should be very close to the actual temperature within the cell. If the sensor is placed in a cell strap, there will normally be a period of time just after a heavy current drain (e.g. engine start) when the sensor shows a temperature that is hotter than the actual cell temperature.

(D) Battery failure sensing and warning systems have also been used to show compliance with this rule.

(3) Battery replacement with any battery other than the one that was installed and accepted as part of the original type design must consider several aspects of battery design and installation to assure that the type design is not negatively impacted.

(i) The replacement battery should provide at least the minimum usable capacity as required by the current load analysis. This requirement of minimum usable capacity should be valid over the entire range of environmental conditions. Different types of batteries have different inherent characteristics. Nickel cadmium batteries have a voltage discharge curve that allows most of the amp-hour capacity to be usable from a delivered voltage standpoint, where only about 66% of the amp-hour capacity for lead acid batteries is usable due to the delivered voltage becoming too low to use. If a replacement battery has a similar discharge rate, and the capacity is similar throughout the original battery's environmental range, then no further testing should be needed.

(ii) Replacement batteries must be compatible with type design requirements of the helicopter (reference paragraph b(2)(i)(A) above). For IFR and CAT A certified helicopters that depend on fault clearing features, an analysis may be

needed to show that the electrical system still complies to the original certification requirements. Subsequent analysis validation by testing may be needed in those cases where the system that provides fault clearing is difficult to evaluate by analysis alone. In these cases, the effects of a change in battery internal impedance on the fault clearing features is uncertain and may not be adequately determined by analysis. There are high rate discharge types of batteries and slow-rate discharge batteries that have different internal impedances and their behavior in a fault clearing circuit is also different. The regulatory basis for analysis and testing for fault clearing is contained in Appendices B and C.

(iii) Replacement batteries must show compliance to the requirements of FAR 27 for the same areas of concern identified in paragraph b(2)(i)(B).

AC 27.1357. § 27.1357 (Amendment 27-13) CIRCUIT PROTECTIVE DEVICES.

a. Explanation. Circuit protective devices are normally installed to limit the hazardous consequences of overloaded or faulted electrical circuits. These devices are resettable (circuit breakers) or replaceable (fuses) to permit the crew to restore service when nuisance trips occur or when the abnormal circuit condition can be corrected in flight. Chapter 11 of Advisory Circular 43.13-1A, “Acceptable Methods, Techniques, and Practices: Aircraft Inspection and Repair,” includes guidance on selection of circuit protective devices.

b. Procedures.

(1) The circuit protective devices for systems essential to flight safety should not be tripped by faults in other circuits.

(i) Systems that are “essential to flight safety” are generally those systems that are required to show compliance with the regulations. These essential systems include the basic electrical system, the distribution system, and many electrical utilization systems.

(ii) An electrical utilization system is a system of electrical equipment, devices, and connected wiring using electrical energy to perform a specific aircraft function.

(iii) The specific utilization systems, which are necessary to maintain controlled flight and land safely, will vary with the type of rotorcraft and with the nature of operations. Examples of systems which may be essential are basic flight instruments, minimum navigation equipment, minimum radio communications, and flight control systems.

(2) Automatic reset circuit breakers, which automatically reset themselves, should not be used as circuit protective devices. If an abnormal circuit condition cannot be corrected in flight, the decision to restore power to the circuit should result from a careful analysis by the flightcrew and cannot be performed by automatic reset circuit breakers.

To ensure crew supervision over the reset operation, circuit protective devices should be designed to require a manual operation to restore service after tripping. Circuit breakers must be designed such that the tripping mechanism cannot be overridden by the operating control. These are known as the “trip free” type.

(3) This paragraph requires protective devices for circuits essential to safety in flight to be accessible to the crew in the cockpit. Again, this generally applies to systems required for compliance as discussed above. If continued safe flight to the destination is sufficiently assured, certain required circuits have been excepted from this accessibility. Voltmeter and ammeter circuit protective devices are examples of ones that have been excepted. Some utilization systems, although not specifically required by Part 27, may be required for the particular design to be certified. Circuit protective devices for these systems should be accessible. The following are considered to be acceptable compliance with the “readily reset” provision of this paragraph:

(i) For operation by a single pilot with seat belt and shoulder harness normally adjusted, the pilot should be able to identify and reset or replace the opened circuit protector while flying the rotorcraft. Circuit protection should not be located aft of a vertical plane passing left to right (laterally) through the pilot’s body.

(ii) For a crew of two, it is satisfactory for one crewmember to move his seat and loosen his shoulder harness to identify and reset or replace the circuit protective device. It is not satisfactory for one of the crewmembers to leave his seat to reset or replace the circuit protective device.

(4) The spare fuse requirement applies only to fuses protecting systems required to show compliance with the regulations. Spare provisions are encouraged but not required for nonrequired convenience type installations. The spare fuses should be stored in a location readily accessible to the crew. For spare fuses not directly visible to the crew, location information should be provided. One acceptable location is on the fuse panel in a holder without wire terminations. The spare fuse should be identified “spare” with the fuse rating.

(5) Passive circuit protection has been utilized to a limited degree in some designs. To accommodate special installation problems, unprotected wire runs of up to 2 feet have been accepted in a few instances when associated with detailed specific installation data and regular periodic inspections. Specific installation data would normally include information such as routing requirements, clamp locations, requirement for conduit, etc. Electrical master junction boxes usually rely to some degree on

passive circuit protection for protection against short circuits on distribution bars. This reliance is normally supported by considerations such as careful layout to minimize the possibility of shorts from loose objects, extensive use of nonconductive materials, terminal covers for relays, etc. Periodic inspections are also normally required. It is desirable to install junction boxes so loose objects will tend to fall away from internal circuitry. Also, careful consideration should be given to flammability characteristics when selecting a nonconductive material.

AC 27.1361. § 27.1361 MASTER SWITCH.

a. Explanation. This paragraph provides for a master switch to allow for a quick disconnect of electric power sources. This provision was intended to minimize the probability of electrical power providing an ignition source during a crash.

b. Procedures.

(1) It has been determined that bypassing the master switch with small load circuits may not significantly increase the probability of electrical ignition of fuel. Therefore, it is permissible to allow live circuits as described in paragraph (b) of this section.

(2) The pilot should be able to readily identify and operate the master switch from his normal crew position with seat belt and shoulder harness normally adjusted. The master switch and switch positions should be labeled. The labels should be readily recognized under all certificated flight conditions.

(3) Designs that include multiple power sources may include a “master switch arrangement” instead of a “master switch.” This is done to minimize the possibility of a single failure resulting in a total loss of electrical power.

(4) In addition to carefully evaluating the functional aspects of an installation, the malfunction aspects must also be considered as required by § 27.1309. Normally, the installation is protected against inadvertent actuation of the function.

AC 27.1365. § 27.1365 ELECTRIC CABLES.

a. Explanation. The FAA does not have a wire standard and, in general, relies on military specifications. Where a military specification does not exist, manufacturers’ specifications, along with appropriate qualification test data, have been accepted.

b. Procedures.

(1) Chapter 11 of Advisory Circular 43.13-1A, “Acceptable Methods, Techniques and Practices: Aircraft Inspection and Repair,” contains a listing of wiring that has been accepted for aircraft installations.

(2) In many instances, references to a basic specification are not adequate since several configurations may exist, and reference to a supplemental specification sheet will also be necessary.

(3) Where wire with thin wall insulation (thickness of at least 10.5 mils.) has been used, some problems can occur if special precautions are not taken when the wire is stamped for identification. The areas of concern are temperature, pressure, and dwell time of the stamp.

(4) Some additional types included in Tables A-I and A-II of MIL-W-5088H, Appendix A, have also been evaluated and accepted for civil applications. Use of a specific type of wiring selected from this listing should be coordinated with FAA engineering personnel.

(5) Wire insulated with KAPTON® polyimide film manufactured to MIL-W-81381A, has been used in aeronautical products with varying degrees of success. The U.S. Navy had such a bad service history with KAPTON® insulated interconnect wire in aircraft that in the mid-1980s the U.S. Navy no longer allows the use of KAPTON® insulated wire. U.S. Army policy also bans the use of KAPTON® wire in their rotorcraft. Although the FAA has taken no such action, the use of KAPTON® insulated wire requires very special handling. The following areas should be observed when utilizing KAPTON® insulated wire:

(i) The instructions in the KAPTON® wire “Handling Manual” should be strictly followed. This manual may be obtained from E.I. Du Pont de Nemours and Company, Polymer Products Department, Industrial Film Division, Wilmington, Delaware 19898.

(ii) Use in special wind and moisture problem (SWAMP) areas, such as wheel wells, usually requires additional protection for the cable bundles.

(iii) The wire should not be exposed to a combination of either high stress (U.V. or physical) in the presence of water, high humidity, or high PH factor liquids.

(iv) The stiffness and permanent set (memory) of KAPTON® may cause chafing in unrestrained bundles or where KAPTON® insulated wire is bundled with wires of other insulation types.

(v) Care should be exercised in the stripping, stamping, and terminating of KAPTON® insulated wires.

NOTE: KAPTON® is a registered trademark of E.I. Du Pont de Nemours and Company.

(6) Compliance to the flame resistance requirement should be shown by testing in accordance with FAR 25, Appendix F, Part 1, paragraph (b)(7) for the sixty-degree

burn test. FAR 25, Appendix F contains test procedures and pass-fail criteria for this requirement.

AC 27.1367. § 27.1367 SWITCHES.

a. Explanation. Qualification data that are available from the switch manufacturer should provide information regarding contact ratings and environmental limitations.

b. Procedures.

(1) Contact ratings are normally provided by the switch manufacturer. If the particular application is not specifically addressed by the switch manufacturer, additional information is available in Chapter 11, Section 2 of Advisory Circular 43.13-1A, "Acceptable Methods, Techniques and Practices: Aircraft Inspection and Repair."

(2) The rule requires all switches to be accessible.

(i) For operation by a single pilot with seat belt and shoulder harness normally adjusted, the pilot should be able to identify and operate essential switches while flying the rotorcraft. Essential system switches should be located forward of a vertical plane passing left to right (laterally) through the pilot's body.

(ii) For a crew of two, switches for essential systems can be further back and beyond the reach of the pilot if readily identifiable and accessible to the other pilot or crewmember.

(3) This paragraph requires labeling of all switches. Each switch should be labeled for the circuit controlled, and each switch position should also be labeled.

SUBPART F - EQUIPMENT

LIGHTS

AC 27.1381. § 27.1381 INSTRUMENT LIGHTS.

a. Explanation. This section provides minimum performance standards for the instrument lighting system. Section 27.1309(b) is used to evaluate the malfunction aspects of the system. If appropriate, § 27.1309(a) is used to evaluate the equipment under appropriate environmental considerations.

b. Procedures.

(1) The overall instrument lighting system should be designed and installed such that single failures that occur will not result in the loss of both primary and secondary (backup) lighting for any instrument or area of the cockpit. In some instances, the system is divided such that the controls for the pilot's panel are separate from the copilot's panel and both of these are separate from the center panel. The ideal is to divide the system such that the impact of single failures will be minimized.

(2) Secondary (backup) instrument lighting should be provided, and this is accomplished in some instances by eyebrow lights. A system that provides general cockpit lighting from a source in the aft area of the cockpit is normally not acceptable since normal positioning and movement of the crew will block this type of light.

(3) The standard does not specify any color requirements for instrument lighting. White is normally provided. The color provided should ensure that the color coding of the instruments is readily identifiable.

(4) The final installed system should be evaluated by a flight test pilot. An actual night flight should be conducted for initial certification of an aircraft. In some instances the vibration characteristics and other flight-induced factors have been demonstrated to seriously affect the pilot's ability to see in the cockpit environment at night. Evaluations following modifications may be conducted with a darkened cockpit on the ground. It should be verified that direct rays are shielded from the pilot's eyes, and that objectionable reflections do not exist. The pilot should also assume failures of various controls, electrical busses, etc., to account for all appropriate failures.

AC 27.1383. § 27.1383 LANDING LIGHTS.

a. Explanation. This section provides minimum performance standards for the installation and normal operation of the landing lights. Certification to this standard is all that is required for approval of the rotorcraft; however, the different operating rules should also be reviewed since they may contain additional requirements. The malfunction considerations are based on the provisions of § 27.1309(b).

b. Procedures.

(1) The performance requirements of this standard are normally evaluated by a flight test pilot, and usually are included in the Type Inspection Authorization as part of the evaluation to be conducted at night.

(2) The installation of the landing light unit(s) should be very carefully evaluated. Many of the units provided are stowed until needed and then driven to their operating position by an electric motor. If this type of light unit is provided, the possibility of its contact with fuel fumes should be considered. Installations that have this problem normally require the use of light units qualified as explosion proof. The installation should also be reviewed to determine if a single failure can cause the light to be on in the stowed position. If the light can be on, the potential for overheat or fire in the adjacent area should be considered.

AC 27.1385. § 27.1385 POSITION LIGHT SYSTEM INSTALLATION. Refer to Advisory Circular 20-74, "Aircraft Position and Anticollision Light Measurements."

AC 27.1387. § 27.1387 (Amendment 27-7) POSITION LIGHT SYSTEM DIHEDRAL ANGLES. Refer to Advisory Circular 20-74.

AC 27.1389. § 27.1389 POSITION LIGHT DISTRIBUTION AND INTENSITIES. Refer to Advisory Circular 20-74.

AC 27.1391. § 27.1391 MINIMUM INTENSITIES IN THE HORIZONTAL PLANE OF FORWARD AND REAR POSITION LIGHTS. Refer to Advisory Circular 20-74.

AC 27.1393. § 27.1393 MINIMUM INTENSITIES IN ANY VERTICAL PLANE OF FORWARD AND REAR POSITION LIGHTS. Refer to Advisory Circular 20-74.

AC 27.1395. § 27.1395 MAXIMUM INTENSITIES IN OVERLAPPING BEAMS OF FORWARD AND REAR POSITION LIGHTS. Refer to Advisory Circular 20-74.

AC 27.1397. § 27.1397 (Amendment 27-6) COLOR SPECIFICATIONS. Refer to Advisory Circular 20-74.

AC 27.1399. § 27.1399 (Amendment 27-2) RIDING LIGHT.

a. Explanation. The riding light is an amphibious operation requirement. The function of this light is to make the rotorcraft visible at night to other vessels when the rotorcraft has landed on water. A very important point which should be remembered is

that when a rotorcraft has landed on the water and is not in flight, it is considered a vessel in accordance with the United States Coast Guard (USCG) navigation rules (Inland Navigation Rules Act of 1980). If water operations are contemplated, one should acquire the USCG Navigation Rules, COMDTINST M16672.2A, which are for sale from Superintendent of Documents, U.S. Government Printing Office, Washington, D.C. 20402.

b. Procedures. A white light should be installed in a position where it will show the maximum unbroken light for a horizontal arc of 360° around the rotorcraft. If possible, this light should not be obscured by sectors of more than 6°. The light should be installed to meet the malfunction requirements of § 27.1309(b). (Reference paragraph AC 27.1309.) For the purpose of this light, the following definition found in the Inland Navigation Rules, 33 CFR 84.13, Color specification of lights, and 33 CFR 84.15, Intensity of lights, applies:

(1) The chromaticity of white lights shall conform to the following standards, which lie within the boundaries of the area of the diagram specified for each color by the International Commission on Illumination (CIE), in the “Colors of Light Signals,” which is incorporated by reference. It is Publication CIE No. 2.2 (TC-1.6), 1975, and is available from the Illumination Engineering Society, 345 East 47th Street, New York, NY 10017. It is also available for inspection at the Office of the Federal Register, Room 8401, 1100 L Street NW., Washington, D.C. 20408.

(2) The boundaries of the area for white are given by indicating the corner coordinates, which are as follows:

X	0.525	0.525	0.452	0.310	0.310	0.443
Y	0.382	0.440	0.440	0.348	0.283	0.382

and 33 CFR 84.15 defines the required luminosity to be visible on a clear night for 2 nautical miles. The minimum luminosity of the light is given by the formula:

$$I = 3.43 \times 10^{6} \times T \times D^{2} \times K^{-D}$$

where: I is luminous intensity in candelas under service conditions,
T is threshold factor 2×10^{-7} lux,
D is range of visibility (luminous range) of the light in nautical miles, and
K is atmospheric transmissivity. For prescribed lights the value of K shall be 0.8, corresponding to a meteorological visibility of approximately 13 nautical miles.

(3) Solving this formula indicates a minimum intensity of 4.3 candelas is required for this light.

NOTE: The FAR and the USCG navigation rules may be satisfied by an externally hung light(s). One method of compliance would be to use USCG approved all-around lights which are of the appropriate luminosity and externally hung.

AC 27.1401. § 27.1401 (Amendment 27-10) ANTI-COLLISION LIGHT SYSTEM.

a. Certification for night operations requires an approved aviation red anti-collision light. Determination of the location and how many anti-collision lights are required to satisfy the regulations are functions of aircraft shape and the ability to obtain the required area coverage and light intensity. A detailed explanation of how to calculate the measured area coverage required by § 27.1401(b) is given in AC 20-30B. An explanation of the methods used to measure and calculate the light intensity and color required by § 27.1401(e) are explained in AC 20-74.

b. The anti-collision light(s) should be located to obtain the required coverage and to prevent cockpit reflections that would affect the crew's vision. The anti-collision lights are required to be red to reduce cockpit reflections and objectionable effect of rotor blade strobing. During the period of August 11, 1971, through February 4, 1976, white lights were permitted by the rules; however, white lights resulted in undesirable cockpit reflections at night and in close proximity to clouds. For these reasons, white lights are not considered to be satisfactory in all operating conditions. Section 27.1401(b) was changed in 1976 to require a red anti-collision light. White lights have been approved for installation on rotorcraft when they were installed in addition to the required red lights, if an independent control for the white light was provided that allowed the pilot to eliminate any adverse cockpit reflections.

SUBPART F - EQUIPMENT

SAFETY EQUIPMENT

AC 27.1411 § 27.1411 (Amendment 27-11) SAFETY EQUIPMENT--GENERAL.

a. Explanation.

(1) This section contains requirements for the accessibility and stowage of required safety equipment. Compliance with this section should ensure that:

(i) Locations for stowage of all required safety equipment have been provided.

(ii) Safety equipment is readily accessible to both crewmembers and passengers, as appropriate, during any reasonably probable emergency situation.

(iii) Stowage locations for all required safety equipment will adequately protect such equipment from inadvertent damage during normal operations.

(iv) Safety equipment stowage provisions will protect the equipment from damage during emergency landings when subjected to the inertia loads specified in § 27.561.

(2) It is a frequent practice for the rotorcraft manufacturer to provide the substantiation for only those portions of the ditching requirements relating to aircraft flotation and ditching emergency exits. Completion of the ditching certification to include the safety equipment installation and stowage provisions is then left to the affected operator so that those aspects can best be adopted to the selected cabin interior. In such cases, the “Limitations” section of the Rotorcraft Flight Manual should identify the substantiations yet to be accomplished in order to justify the full ditching approval. The operator (or modifier) performing these final installations is then concerned directly with the details of this paragraph. Any aspects of the basic rotorcraft flotation and emergency exits approval that are not compatible with the modifier’s proposed safety equipment provisions should be resolved between the type certificate holder and the modifier prior to FAA/AUTHORITY approval for ditching. (See paragraphs AC 27.801a(9) and AC 27.1415a(3).)

b. Procedures.

(1) A cockpit evaluation should be conducted to demonstrate that all required emergency safety equipment to be used by the crew will be readily accessible during any probable emergency situation. This evaluation should include, for example, emergency flotation equipment actuation devices, remote liferaft releases, hand fire extinguishers, and protective breathing equipment.

(2) Stowage provisions for safety equipment shown to be compatible with the vehicle configuration presented for certification should be provided and identified so that:

(i) Equipment is readily accessible regardless of operational configuration.

(ii) Stored equipment is free from inadvertent damage from passengers and handling.

(iii) Stored equipment is adequately restrained to withstand the inertia forces specified in § 27.561(b)(3) without sustaining damage.

(3) Liferaft stowage provisions should be sufficient to accommodate rafts for the maximum number of occupants for which certification for ditching is requested.

(i) Liferafts stowed inside the rotorcraft should be located near the ditching emergency exits so that:

(A) Liferafts are readily accessible and deployment through ditching emergency exits by passengers and crew may be accomplished without unreasonable effort and training.

(B) Deployment of liferafts can be accomplished without damage (i.e., punctures, tears, etc.).

(ii) Liferafts stowed outside of the rotorcraft should have--

(A) A readily accessible deployment device; and

(B) A secondary method of deployment near the stowed area.

(iii) Rotorcraft fuselage attachments for the liferaft static lines required by § 27.1415(c) must be provided.

(A) Static line fuselage attachments should not be susceptible to damage when the rotorcraft is subjected to the maximum emergency ditching water entry loads established by § 27.801. (See paragraph AC 27.801b(1).)

(B) Static line fuselage attachments should be structurally adequate to restrain a fully loaded raft of the maximum capacity required for ditching certification.

(C) Liferafts that are remotely or automatically deployed must be attached to the rotorcraft by the required static line after deployment without further action from the crew or passengers.

(4) Stowage provisions for signaling equipment required by § 27.1415 should be located near a designated ditching emergency exit.

(5) If stowage provisions for life preservers are included in an interior configuration, each life preserver when stowed must be within easy reach of each occupant while seated.

(6) Service experience has shown that following deployment, life rafts are susceptible to damage while in the water adjacent to the helicopter due to projections on the exterior of the helicopter such as antennas, overboard vents, guttering, etc. Projections likely to cause damage to a deployed life raft should be modified or suitably protected to minimize the likelihood of their causing damage to a deployed life raft. Relevant maintenance information should also provide procedures for maintaining such protection for rotorcraft equipped with life rafts.

AC 27.1413 § 27.1413 (Amendment 27-25) SAFETY BELTS.

a. Explanation. Design and performance standards are contained in this section.

(1) Each safety belt must be equipped with metal-to-metal latches (Amdt. 27-15).

(2) Belts and belt anchors must sustain without failure ultimate loads as prescribed for each installation.

(3) Seats and berths are included.

(4) Litters, if installed, shall be included.

(5) TSO-C22, Safety Belts, contains acceptable aircraft belt standards. Also, TSO-C114, Torso Restraint Systems, dated March 27, 1987, contains acceptable aircraft standards for compliance to the standard per Amendment 27-25, dated November 13, 1989. In part, the belts shall have a 2-inch nominal width, shall be self-extinguishing per § 25.853(a), and may have a 1,500- or 3,000-pound rated strength.

b. Procedures.

(1) TSO-C22 or TSO-C114 approved seat belts or seat belt/harnesses should be used. The rated load shall not be exceeded. During an interior compliance inspection, the belt should be checked for label, rating, and metal-to-metal latches.

(2) The type design data shall contain an analysis or test results of belts and anchors proving compliance with the strength standards of this section. Fitting factors prescribed in § 27.785 shall be used.

(3) The use or application of the belts shall be proven in compliance with the standard. The belt rated strength shall not be exceeded by the ultimate load derived from § 27.561(b).

(4) The rated strength of each unique belt may be stated in structural loads or design criteria report and the corresponding maximum ultimate design load listed for ease of comparison.

AC 27.1415 § 27.1415 (Amendment 27-11) DITCHING EQUIPMENT.

a. Explanation.

(1) Emergency flotation and signaling equipment is not required for all rotorcraft overwater operations. However, if such equipment is required by an operating rule (e.g., § 135.167), the equipment supplied for compliance with the operating rule must meet the requirements of this section.

(2) Compliance with the provisions of § 27.801 for rotorcraft ditching requires compliance with the safety equipment stowage requirements and ditching equipment requirements of §§ 27.1411 and 27.1415, respectively.

(i) Emergency flotation and signaling equipment installed to complete certification for ditching or required by any operating rule must be compatible with the basic rotorcraft configuration presented for ditching certification. It is satisfactory if operating equipment is not incorporated at the time of original type certification of the rotorcraft provided suitable information is included in the “Limitations” section of the Rotorcraft Flight Manual to identify the extent of ditching certification not yet completed.

(ii) When the ditching equipment required by § 27.1415 is being installed by a person other than the applicant who provided the rotorcraft flotation system and ditching emergency exits, special care must be taken to avoid degrading the functioning of the aircraft devices and to make the ditching equipment compatible with them. (See paragraphs AC 27.801a(9) and AC 27.1411a(2).)

b. Procedures.

(1) Liferafts and life preservers used to show compliance with the ditching requirements must be of an approved type. Compliance with the requirements of TSO-C12 for liferafts and TSO-C13 for life preservers will satisfy regulatory requirements for approval of this equipment.

(i) Life Preservers.

(A) Life preservers should comply with the requirements of the applicable operating regulations (FAR Parts 91, 135, 121, etc.). For extended overwater operations, each life preserver is required by the operating rules to have an approved survivor locator light.

(B) Protective covers for life preservers should be compatible with the TSO requirements under which the basic life preserver was approved.

(ii) Liferafts.

(A) Liferafts are rated during their approval to the number of people that can be carried under normal conditions and the number that can be accommodated in an overload condition. Only the normal rating may be used in relationship to the number of occupants permitted to fly in the rotorcraft.

(B) Each liferaft released automatically or by the pilot must be attached to the rotorcraft by a line to secure the liferaft close to the rotorcraft for occupant egress. The line should be of adequate strength to restrain the liferaft under any reasonably probable sea state condition but must be designed to release before submerging the empty raft to which it is attached if the rotorcraft sinks.

(iii) Survival Equipment. Approved survival equipment if required by any operating rule must be attached to each liferaft. Provisions for the attachment and stowage of the appropriate survival equipment should be addressed during the ditching equipment segment of the basic ditching certification.

(2) Emergency signaling equipment required by any operating rule must be free from hazard in its operation. Required signaling equipment must be easily accessible to the passengers or crew and should be located near an emergency ditching exit or included in the survival equipment attached to one of the rafts.

AC 27.1419. § 27.1419 (Amendment 27-19) ICE PROTECTION.

a. Background.

(1) In March 1984, the FAA/AUTHORITY for the first time certificated a rotorcraft for flight into known icing conditions. Several other manufacturers are pursuing designs for icing flight capability.

(2) Most rotorcraft icing technology has been developed for military rotorcraft. As of 1990, the only U.S. military rotorcraft equipped and approved for flight into icing conditions is the UH-60A (Blackhawk). The UH-60A is limited to supercooled cloud conditions where liquid water content (LWC) does not exceed 1.0 gm/m^3 and outside air temperature (OAT) is not below -20° C.

(3) Many rotorcraft operators have voiced a high priority on obtaining rotorcraft approved for operation in icing conditions.

(4) The icing characteristics envelope of FAR Part 25, Appendix C, has served as a satisfactory design criteria for fixed-wing operations for two decades. The envelope, as presented, extends to 22,000 feet with possible extension to 30,000 feet but does not present icing severity as a function of altitude. At the time the envelope was derived, it was assumed that all transport category airplanes would operate to at least 22,000 feet. For present state-of-the-art rotorcraft, this assumption is not valid. As such, an altitude-limited icing envelope based on the same data used to derive the Part 25, Appendix C, and the Part 29, Appendix C, envelopes is presented as an alternate to the full-icing envelope.

b. Explanation.

(1) General.

(i) The discussion in this paragraph pertains generally to certifications to the full-icing envelope of Part 29, Appendix C, within the altitude limitations of the rotorcraft or to the altitude-limited icing envelope based on a 10,000-foot pressure altitude limit. The actual icing envelope considered may be further restricted based on the actual pressure altitude envelope for which certification is requested. It envisions certification with full ice protection systems (rotor blades, windshields, engine inlets, stabilizer surfaces, etc.). With the exception of pilot controllable variables such as altitude and airspeed, limited certification (either in terms of icing envelope or protection capability) is not envisaged at this time due to the difficulty in forecasting the severity of icing conditions, relating the effects of the forecasted conditions to the type of aircraft, and the effects of reported icing among various types of aircraft, particularly between fixed- and rotary-wing aircraft. In addition, with a limited protection capability, viable escape options may not be operationally available if limitations are exceeded.

(ii) The discussion in this paragraph, regarding rotor blade ice protection, is oriented primarily toward electrothermal rotor deicing systems, since these have the most widespread acceptance and projected use within the industry. Also, most of the testing and research into rotorcraft ice protection to date has been conducted with these types of systems. Research is continuing with other types of systems such as anti-icing fluid systems, and information will be added to address certification of these as necessary. It should also be noted that most of the rotorcraft icing experience accumulated to date has been on rotorcraft with symmetrical airfoil sections. The application of this experience to rotorcraft with asymmetrical airfoils should be carefully evaluated. Limited experience has been gained during development and qualification testing of the Army Blackhawk on asymmetrical airfoil icing characteristics. The most prominent difference appears to be a more rapid degradation of airfoil performance. Rapidity of performance degradation is also dependent upon severity of the icing condition (primarily a function of liquid water content) and ice shape (primarily a function of OAT and median volumetric droplet diameter (MVD)).

(iii) The effects of ice can vary considerably from rotorcraft to rotorcraft. Experience gained for a rotor system with an identical blade profile could provide valuable information but should be used cautiously when applied to another rotorcraft. Assumptions cannot necessarily be made based on icing test results from another rotorcraft. Particular care should be exercised when drawing from fixed-wing icing experience as the widely different and varying conditions seen by the rotor blades make many comparisons with fixed-wing results invalid. Likewise, icing effects on rotor blades vary significantly from those on other parts of the rotorcraft. This is due to changing blade velocity as compared with the constant velocity of the remaining parts.

(2) Reference Material. Prior to commencement of efforts to design and certify a rotorcraft, the references listed in paragraph d should be reviewed. FAA Technical Report ADS-4, Engineering Summary of Airframe Icing Technical Data, December 1963, although somewhat dated, is recommended for basic aircraft icing protection system design information.

(3) Objective. The objective of icing certification is to verify that throughout the approved envelope, the rotorcraft can operate safely in icing conditions expected to be encountered in service (i.e., Appendix C of Part 29 or the altitude-limited icing envelope presented herein). This will entail determining that no icing limitations exist or defining what the limitations are, as well as establishing the adequacy of the ice warning means (or system) and the ice protection system. A limiting condition may manifest itself in one of several areas such as handling qualities, performance, autorotation, asymmetric shedding from the rotors, visibility through the windshield, etc. Prior to flight tests in icing conditions, sufficient analyses should have been conducted to determine the design points for the particular item of the rotorcraft being analyzed (windshield, engine inlet, rotor blades, etc.). After the analyses are reviewed and found adequate, tests should be conducted to confirm that the analyses are valid and that the rotorcraft can operate safely in any supercooled cloud icing condition defined by Part 29, Appendix C, or the altitude-limited icing envelope. Sufficient flight tests should be conducted to assure adequate ice protection exists for the requested certification. References d(1) and (3) may be useful in determining the design points and extrapolation of test data to the desired design points.

(4) Planning. For best utilization of both the applicant's and the FAA/AUTHORITY's resources, the applicant should submit a certification plan at the start of the design and development effort. The certification plan should describe all efforts intended to lead to certification and should include the following basic information:

(i) Rotorcraft and systems description.

(ii) Ice protection systems description.

(iii) Certification checklist.

(iv) Description of analyses or tests planned to demonstrate compliance.

(v) Projected schedules of design, analyses, testing, and reporting efforts.

(vi) Methods of test - artificial vs. natural.

(vii) Methods of control of variables.

(viii) Data acquisition instrumentation.

(ix) Data reduction procedures.

(5) Environment.

(i) Definitions.

(A) Supercooled Clouds. Clouds containing water droplets (below 32° F) that have remained in the liquid state. Supercooled water droplets will freeze upon impact with another object. Water droplets have been observed in the liquid state at ambient temperatures as low as -60° F. The rate of ice accretion on an aircraft component is dependent upon many factors such as droplet size, cloud liquid water content, ambient temperature, and aircraft component size, shape, and velocity.

(B) Ice Crystal Clouds. Glaciated clouds existing usually at very cold temperatures where moisture has frozen to the solid or crystal state.

(C) Mixed Conditions. Partially glaciated clouds at ambient temperatures below 32° F containing a mixture of ice crystals and supercooled water droplets.

(D) Freezing Rain and Freezing Drizzle. Precipitation existing within clouds or below clouds at ambient temperatures below 32° F where rain droplets remain in the supercooled liquid state.

(E) Sleet. Precipitation of transparent or translucent pellets of ice which have a diameter of 5mm or less.

(F) Hail. Solid precipitation in the form of balls or pieces of ice (hailstones) with diameters ranging from 5mm to more than 50mm.

(ii) Appendix C of Part 29 defines the supercooled cloud environment necessary for certification of rotorcraft in icing except that the pressure altitude limitation is that of the rotorcraft or that selected by the applicant, provided the remaining altitude envelope is operationally practical. Due to air traffic system compatibility constraints, approval of a maximum altitude less than 10,000 feet pressure altitude should be discouraged. However, there are operations where a lower maximum altitude has no

effect on the air traffic system and would still be operationally useful. Figures 3 and 6 of Appendix C, Part 29, relate the variation of average LWC as a function of cloud horizontal extent. These relationships should be used for design assessment of the most critical combinations of conditions as a function of en route distance. This, in combination with a capability to hold in icing conditions for 30 minutes at the destination, is commensurate with policies previously established for fixed-wing aircraft. Figures 3 and 6 should be used in conjunction with the altitude-limited criteria of figures AC 27.1419-1 through -4 herein. It is emphasized that LWC extremes expressed in Part 29, Appendix C, criteria represent the maximum average values to be anticipated within an exceedance probability of 99.9 percent. Transient, instantaneous peak values of much higher LWC have been observed. These instantaneous peak values appear to be of little significance to the design of protected and unprotected surfaces; however, these high values, if encountered, may induce shedding of ice from some unprotected surfaces. This is due to radical changes in the rate of release of latent heat and resultant changes in the structural properties and adhesion force of ice.

(iii) An analysis performed at the FAA Technical Center in 1985 concludes that the aircraft icing environment below 10,000 feet is not as severe in terms of LWC and OAT as that depicted in the Part 29, Appendix C, envelope. This AC presents the altitude-limited envelope that may be employed by those applicants who elect to certify with a 10,000-foot pressure altitude limit. The altitude-limited envelope is based upon the same data that were used to derive the design criteria of Part 29, Appendix C (figures AC 27.1419-1 through -4). The data used to derive these limited envelopes cannot be used to further define icing conditions between 10,000 feet and 22,000 feet; hence, above 10,000 feet, the Part 29, Appendix C, envelopes should be used. It should be noted that the engine inlets should still meet the icing requirements of § 27.1093. The limited icing envelopes may be used on an equivalent safety basis to show compliance with the intent of § 27.1093 if the altitude limit established for the rotorcraft is not greater than 10,000 feet.

(iv) Significantly different effects can result from various combinations of parameters. For example, most rapid ice accumulations occur at the high values of liquid water content, although the greatest impingement area occurs at the high values of droplet size. Most critical ice shapes are a function of each of these parameters in addition to airspeed, surface temperature, and surface contour. Care should be taken to explore the entire specified ranges of these parameters during the design, development, and certification efforts.

(v) Mixed conditions (i.e., a combination of ice crystals and supercooled water droplets) and freezing rain or freezing drizzle are not addressed in the Part 29 environmental criteria but can present more severe icing conditions than those defined. Although the probability of encountering freezing rain is relatively low, mixed conditions commonly occur in supercooled cloud formations. Little data have been gathered on the effects of encountering mixed conditions (see paragraph AC 27.1419d(6). <u>There are no criteria for certification in mixed conditions or freezing rain at present and therefore any icing certification is only valid for supercooled droplets</u>. The RFM should

alert the crew to the capabilities of the aircraft when operating in icing conditions. Avoidance procedures (e.g., climb or descent) may also be useful.

(6) Flight Test Prerequisites.

(i) The prototype rotorcraft should be certified (or in the process of being certified) for IFR flight.

(ii) Sufficient analyses should be developed, submitted, and accepted by the FAA/AUTHORITY to show that the rotorcraft is capable of safely operating to the selected design points of both the continuous maximum and intermittent maximum conditions of Part 29, Appendix C, or the altitude-limited icing envelope. A detailed failure modes and effects analysis (FMEA) of the ice protection system should be performed.

(iii) Specific attention should be given to (1) assuring that the selected design condition(s) of atmospheric and rotorcraft flight envelopes have been identified; (2) qualification and design of ice protection systems and components; and (3) component installation and ice formation effects upon basic rotorcraft structural properties and handling qualities. These assurances can be established from analyses, bench tests, and/or dry air flight tests or simulated icing tests, as appropriate, prior to flight tests in natural icing.

(iv) The applicant should assess rotor blade stability with ice deposits to assure that dynamic instability will not occur in icing conditions. This assessment may be accomplished by analysis including consideration of failure of the most critical segment of the rotor blade ice protection system. It also may be accomplished by experimental means such as attaching dummy ice shapes to the blades and using a whirl stand or wind tunnel.

c. Procedures.

(1) Compliance.

(i) In general, compliance can be established when there is reasonable assurance that while operating in the specified icing environment (1) the engine(s) will not flameout or experience significant power losses or damage; (2) stress levels are not reached with ice accumulations that can endanger the rotorcraft or cause serious reductions in component life; (3) the handling qualities, performance, visibility, and systems operation are defined and are not deteriorated unacceptably; (4) inlet, vent, or drain blockage (such as fuel vent, engine, or transmission cooler) is not excessive; and (5) autorotation characteristics are acceptable with maximum ice accretion between deice cycles. Assessment of performance loss should include not only the drag and weight of the ice itself but electrical or other load demands of the ice protection system and any performance changes resulting from modified rotor blade contours.

(ii) It is emphasized that ice formations (shape, weight, etc.) vary significantly under varying conditions of OAT, LWC, MVD, airspeed, attitude, and rotor RPM. The most critical conditions should be defined by means of analyses or test and verified by test. Performance changes under these various conditions should be determined and found acceptable.

(iii) Laboratory, icing tunnel, ground spray rig, and airborne icing tanker tests are all very useful in developing an ice protection capability, but none of these, either individually or collectively, can satisfy the full requirements for certification. None can presently duplicate the combinations of liquid water content, droplet size, flow field, and random shedding patterns found in natural icing conditions. Airborne tankers hold considerable promise of being able to fulfill certification requirements (in addition to the advantage of being able to produce an icing environment on demand rather than having to wait for it to occur in nature), but tankers have not been able to generate droplet sizes that cover the complete envelope for certification. Many improvements have been made in some tankers in recent years; however, large droplet sizes have typically been a problem. Also, the size of existing tanker clouds is not of sufficient cross section to immerse the entire rotorcraft. There are also solar radiation and relative humidity effects to be considered and correlated with natural icing when using a tanker. The tanker should be able to immerse the entire rotor system as a minimum and should have a means of controlling and changing the cloud characteristics uniformly and repetitively. Until an artificial method has been successfully demonstrated and accepted, icing certification must include flight tests in natural icing conditions.

(iv) Flight testing in natural icing conditions also has limitations. Reference AC 27.1419d(16) contains information that may be useful in planning natural icing flight tests. The key limitation of natural icing flight tests is being able to find the combinations of conditions that comprise critical design points. This is especially true of those points falling near the 99.9 percentile of exceedance probability; e.g., high LWC at low OAT with large MVD. It is emphasized that some more severe design points, however, may exist within the atmospheric icing envelope rather than near the edges or corners of the envelope. This does not mean that natural icing tests must be conducted at all the selected design conditions. Natural icing tests should be conducted in conditions as close to design points as possible and sufficient correlation shown with the analyses to assure that the rotorcraft can operate safely throughout the design envelope.

(v) Certification flight testing should be extensive enough to provide reasonable assurance that either induced or random ice shedding does not present a problem. The most likely indication of a problem if it exists will be ice impact on the airframe or rotor imbalance resulting in vibration. The following should be considered sufficient for rejection:

(A) Vibrations sufficient to make the instruments difficult to read accurately.

(B) Vibrations sufficient to exceed the structural or fatigue limits of any rotorcraft part such as blade, mast, or transmission components.

(C) Ice impact damage to essential parts, such as the tail rotor, that could create a flight hazard. Cosmetic, nonstructure flaws that do not exceed wear and tear characteristics or maintenance criteria are acceptable. Any ice shedding effects that require immediate maintenance action are unacceptable.

(vi) There should be a means identified or provided for determining the formation of ice on critical parts of the rotorcraft which can be met by a reliable and safe natural warning or an ice detection system. A system utilizing OAT should include an accurate OAT measurement since the onset of icing can occur in a very narrow temperature band requiring sensitive and accurate OAT measurement. OAT accuracy should be relative to the true temperature of the air mass. Total system accuracy should be ±0.5° C in the -5.0° to +5.0° C range and ±1° C throughout the remaining temperature range. The location of the sensor has been shown to be very critical and, in effect, there can be a position error or other errors induced by ice formations or solar radiation. If the system measures liquid water content, consideration should be given to the fact that the actual LWC fluctuates considerably as the rotorcraft passes through an icing environment. A warning system displaying or utilizing a peak or average LWC value (rather than an instantaneous readout) should include sufficient conservatism to provide a margin of safety. The value of an LWC detecting system lies in its utility as a warning that ice is being encountered. The actual magnitude of LWC in combination with OAT and MVD can be used to indicate the icing severity level. The U.S. Army is developing an advanced ice detection system (1990) for potential application to rotorcraft.

(2) <u>In-flight Ice Detection Sensing Systems</u>

(i) With the advent and development of In-flight Ice Detection Sensing Systems (IIDSS) technology designed to warn flight crews of potential ice accumulation on critical helicopter components, standardized guidelines for certification have been established. These guidelines will permit applicants for new, amended and supplemental type certificates under FAR 27 to present a rational compliance plan to the respective Authority. Currently there are two types of IIDSS; advisory and primary.

(ii) The advisory system enunciates the presence of icing conditions. The flight crew is responsible for monitoring the icing conditions as defined in the Rotorcraft Flight Manual (RFM) and activation by the flight crew of the anti-icing or de-icing system(s) remains a requirement.

(iii) The primary system has automatic control of anti-icing or de-icing systems when the flight crew has selected the automatic switch position. The automatic feature can be de-selected and the system reverts to advisory, where the crew is responsible for monitoring the icing conditions and activating the anti-icing or de-icing system(s). Neither the advisory nor the primary IIDSS are designed to operate on the ground.

(iv) The following factors should be considered during the design and certification of an IIDSS:

(A) The IIDSS display(s) status lights and/or crew alerting messages must be located so that they are within the seated flight crew's forward vision scan area

while performing their normal duties. The IIDSS display must also meet the applicable requirements of § 27.1322. Fixed probes must be located in areas easily scanned by the crew, and must be visible under normal daytime and nighttime flying conditions.

(B) Icing conditions can exist when visible moisture in any form is present and the Outside Air Temperature (OAT) is 41ºF (or 5° Celsius) or lower or the Total Air Temperature (TAT) is 50ºF or lower. It should be noted that icing conditions may also exist when the OAT is 50ºF (10°C) or lower while operating on the ground where surface snow, water, slush, etc., may be ingested by engines or freeze on engines, nacelles, engine sensor probes, rotors, or other critical surfaces.

(C) The core of any IIDSS is the ice detector device and its location. Ice detectors should be installed in carefully determined locations to avoid interference from air data sensors, external protuberances (including aircraft options such as rescue hoists, flotation devices, and radar units), rotor downwash induced water impingement, wheel splash during ground operation, etc.

(D) From the standpoint of powerplant icing protection, airframe visual icing cues are not an acceptable means to advise the flight crew to activate the engine ice protection system. Delaying the use of the engine ice protection system until ice build-up is visible from the cockpit may result in severe engine damage and/or flameout due to shed ice ingestion, and is therefore unacceptable. The engine ice protection system is to be activated by the flight crew in accordance with approved Rotorcraft Flight Manual (RFM) procedures when icing conditions exist, if using an advisory system, or automatically if using a primary system. Current engine induction ice protection systems are operated as anti-ice systems, as required by the RFM limitations and procedures. These requirements provide the necessary margin between system activation and the ambient conditions. In-service experience has shown that adherence to these RFM limitations and procedures has provided satisfactory engine operation.

(E) An IIDSS that is intended as the prime means of alerting the flight crew or operating the de-icing/anti-icing systems should contain certain features:

(1) An IIDSS system hazard analysis should be completed in order to choose the IIDSS architecture.

(2) The effectiveness of the IIDSS must be demonstrated during the icing flight tests of §§ 27.1093 and 27.1419.

(3) The threshold level chosen to activate the ice detection and annunciation system should be guided by:

(i) The assurance that when the amount of ice that is accreted on the critical surfaces is shed, there will be no damage to the helicopter or engines, and

(ii) The assurance that the amount of ice accreted can be safely eliminated by the ice protection system.

(iii) An advisory system should not be overly sensitive and enunciate frequent changes from “on” to “off” and thereby induce the pilot to ignore detector indications. However, the system must be sensitive enough to readily detect sudden exposure to icing conditions throughout the complete approved icing envelope.

(4) If overheat of structure (such as engine inlet cowl or rotorblade) can result from the anti-ice/de-ice systems being “on” during any operations, then a means should be provided to alert the flight crew or an automatic means included that will prevent such a condition.

(5) The operation of an anti-ice/de-ice system should be examined for the combined effect of an undetected failure of the annunciation system together with a time delay before the flight crew manually activates these systems. Specific considerations that warrant investigation include:

(i) The amount of ice that can be accreted on critical areas.

(ii) The effect of the ice shedding on the aircraft and propulsion system.

(iii) The capability of the anti-ice/de-ice systems.

(6) The RFM should address the following:

(i) Normal operational use of the IIDSS and any limitations.

(ii) Procedures to use in case of disagreement between the dual ice detectors, if applicable.

(iii) Failure mode indications, and appropriate crew procedures.

(7) An IIDSS must meet the applicable requirements of FAR 27.1309. Multiple systems, automatic fault monitoring, Built-in Test Equipment (BITE), pre-flight status tests, etc., may be used to support the design reliability, depending on IIDSS system hazard analysis.

(8) To ensure the continued airworthiness of IIDSS, it will be necessary to develop maintenance procedures.

(F) Compliance with the regulations may be demonstrated by tests, analyses, models, similarity with approved systems, or a combination thereof as outlined in the compliance plan and approved by the Authority.

(3) Instrumentation and Data Collection.

(i) Instrumentation proposed for certification tests, including flight strain surveys, should be reviewed as early as possible in the program to establish that it will provide the necessary data. The need for accurate OAT measurement previously noted for operation in icing also applies to the certificated configuration. Mechanical devices such as the rotating multicylinder and rotating disc have been used for measuring the ice accretion rate which is related by calibration to average LWC and MVD. More recently, hybrid mechanical/electronic LWC measuring devices have been used. Devices that rely on ice accretion as a signal source are subject to the Ludlam limit (the limits whereby latent heat of fusion is not totally absorbed, thus resulting in incomplete freezing of the moisture and some inaccuracy in the indication). The Ludlam limit is a function of various parameters including OAT, airspeed, LWC, and MVD. The Ludlam limit may vary from one device to another. (See References AC 27.1419d(8) and AC 27.1419d(9)(i) for further information). Gelatin slides, soot and oil slides, and more recently, laser nephelometers have been used to measure droplet size. Other calibrated devices intended for measurement of LWC should be used. Paragraph AC 27.1419d(16) describes several of these devices. Photographic coverage of critical areas may be necessary to ascertain that ice protection systems are functioning properly and that there are no runback problems. (The term “runback” refers to liquid water that has not been evaporated by surface deice equipment and flows back to an unheated area subject to freezing.) Reference AC 27.1419d(19) highlights use of video techniques and equipment for this purpose. Some systems will require acceptable calibration techniques and data.

(ii) Gelatin, soot, and oil slides provide data that can be used to estimate MVD at discrete intervals while laser nephelometer data can provide time histories of MVD droplet size distributions. Gelatin slide data should be taken frequently during test flights to properly characterize the cloud. Laser nephelometer data have been found to be highly dependent upon knowledge of the equipment and calibration. Proper calibration, maintenance, and data processing techniques should be utilized and demonstrated. Additional information on the subject may be found in Reference AC 27.1419d(18).

(iii) Structural instrumentation requirements should also be established as early as possible in the program. Flight strain measurements are strongly recommended in assessing the ice imposed stress on the rotorcraft. The flight strain measurements should determine the effect on fatigue life due to ice accumulation for such items as main rotor blades, main rotor hub components, rotating and fixed controls, horizontal stabilizer, tail rotor, etc. The subsequent proper operation of retractable devices such as landing gear should be demonstrated with representative ice accretion. In addition, the static and fatigue strength of the blade with heater mat should be substantiated. Any effect of the heater mat on fatigue strength of the blades should be considered.

(4) Additional Considerations. The following are items to consider in an icing certification program. They are not intended to be all-inclusive, and the possibility of widely differing characteristics and critical areas among various rotorcraft in icing should be considered.

(i) The rotorcraft should be shown by analysis and confirmed by either simulated or natural icing tests to be capable of holding for 30 minutes in the design conditions of the continuous maximum icing envelope at the most critical weight, CG, and altitude with a fully functional ice protection system.

(ii) A single ice protection system and power source may be considered acceptable provided that after any single failure of the ice protection system, the rotorcraft can be shown by analysis and/or test to be capable of safe operation (no hazard) for 15 minutes following failure recognition in the continuous icing envelope used as the basis for certification within the same icing limits used for the 30-minute hold criteria. During this 15-minute period the rotorcraft may exhibit degraded characteristics. Pilot controllable operating limitations such as airspeed may be used to satisfy this continued safe flight criteria. For purposes of determining performance and handling qualities degradation, ice protection system failure need not be considered to occur simultaneously with engine failure unless ice protection system operation is dependent upon engine operation.

(iii) Although current airborne weather radar technology systems may be useful in avoiding potential icing conditions by detecting precipitation, the use of weather radar is not an FAA/AUTHORITY requirement for icing certification.

(iv) Section 27.1419(e) says there must be a means to advise the crew when the rotorcraft is in icing conditions in order that the system may be activated.

(v) No autorotational performance data is required for rotorcraft which have Category A powerplant installations. The rotorcraft must be capable of full autorotational landings with the ice protection system operating (§ 27.143a(2)(vi). Autorotational entry, steady state, and flare entry flying qualities and performance should be evaluated with the ice load to be expected with the deice system operating and with the ice load to be expected 15 minutes after failure of the system. Since the en route performance can vary as the ice protection system operates, a mean value of cyclic torque is acceptable provided, at no time the power required drops below that required for level flight. The rotorcraft is assumed to be clear of ice prior to takeoff, and, therefore, the takeoff performance is not degraded. The landing performance can be based on the in-flight assessment of overall performance degradation. Items such as fuel burns can be used as part of the in-flight performance degradation determination. Regardless of the methods used to determine performance degradation, they must be easily used by the crew. The hover performance should be addressed for the termination of a flight after an icing encounter. The engines should be protected from the adverse effects of ice. When ice does accumulate on the inlets, screens, etc., it

must be accounted for in performance, engine operating characteristics, and inlet distortion.

(vi) The handling qualities of the rotorcraft must be substantiated if ice can accumulate on any surface. When ice can accumulate on unprotected surfaces, the rotorcraft must exhibit satisfactory IFR handling qualities. In addition, following the failure of the deice system, the rotorcraft must be safely controllable for 15 minutes, i.e., the rotorcraft must be free from excessive and rapid divergence. Artificial ice shapes may be acceptable for acquisition of flight test data necessary for handling qualities and performance evaluations and demonstrations.

(vii) Items such as fuel tank vents, cooling vents, antennas, etc., should be substantiated for maximum icing effects.

(viii) The ice protection system should be sufficiently reliable to perform its intended function in accordance with the requirements of § 27.1309. These requirements may in some instances be met by the use of sound engineering judgment during design and compliance demonstrations. In many instances, use of good design practices, failure modes and effects analysis, and similarity analyses combined with good judgment will be adequate. In some instances the need for reliability analyses may be desirable. Additional information pertaining to reliability is contained in paragraph AC 27.1309 (§ 27.1309).

(ix) The subject of lightning should be addressed. The criteria applied on rotorcraft with ice protection systems are that “the rotorcraft should be protected in such a manner to minimize lightning risk.” The general rules of § 27.1309(a), (b), and (c) are applicable to ensure adequate lightning protection. (Amendment 27-21, November 6, 1984, added lightning protection requirements in § 27.610.)

(x) Ice protection of pitot-static sources, windshields, inlets, exposed control linkages, etc., should be considered.

(xi) The impact of ice protection system failure, complete and partial, and achieving adequate warning thereof should be assessed.

(xii) The impact of delayed application of ice protection systems should be assessed. Hazardous conditions should not be apparent. Any rotorcraft characteristic changes resulting should be covered in cautionary material in the rotorcraft flight manual.

(xiii) Possible droop stop malfunction with ice accumulation and its potential hazard to the rotorcraft, its occupants, and ground personnel should be assessed.

(xiv) Possible ice shedding hazards to ground personnel or equipment in proximity to turning rotors following flight in icing conditions should be given consideration.

(5) Flight Manual. Areas of the flight manual which may require input are:

(i) Operating limitations including approved types of operation and prohibiting operation in freezing rain or freezing drizzle conditions. Avoidance procedures may also be useful.

(ii) Normal Operating Procedures. Information on the ice detection means or system and ice protection system and their capabilities.

(iii) Emergency Operating Procedures. Operating procedures containing essential information particularly with system failure.

(iv) Caution Notes. These caution notes should advise or address:

(A) Against inducing asymmetric shedding with rapid control inputs or rotor speed changes, except possibly as a last resort. Rotor speed changes appear to be more effective than control inputs in removing ice from the rotor blades of some rotorcraft.

(B) Loss in range, climb rate, and hover capability following prolonged operation in icing.

(C) The need for clean blade surfaces and use of approved cleaning solvents or ground deicing/anti-icing agents prior to start of rotors turning.

(D) Changes in autorotational characteristics resulting from ice formations.

(E) Although the rotorcraft has been certificated for flight in supercooled clouds and falling and blowing snow, flight in other conditions such as freezing rain, freezing drizzle, sleet, hail, and combinations of these conditions with supercooled clouds must be avoided.

(F) The potential hazards to ground personnel, passengers deplaning, and equipment in proximity to turning rotors following flight in icing conditions.

d. Icing References.

(1) FAA Technical Report ADS-4, Engineering Summary of Airframe Icing Technical Data, December 1963.

(2) Advisory Circular 20-73, Aircraft Ice Protection, 21 April 71.

(3) Advisory Circular 91-51, Airplane Deice and Anti-ice Systems, 9/15/77.

(4) FAA Report RD-77-76, Engineering Summary of Powerplant Icing Technical Data, July 1977.

(5) United States Army Aviation Engineering Flight Activity Reports:

(i) Natural Icing Tests, UH-1H Helicopter, Final Report, June 1974, USAASTA Project No. 74-31.

(ii) Artificial Icing Tests, UH-1H Helicopter, Part I, Final Report, January 1974, USAASTA Project No. 73-04-4.

(iii) Artificial Icing Tests, UH-1H Helicopter, Part II, Heated Glass Windshield, Final Report, USAASTA Project No. 73-04-4.

(iv) Artificial Icing Tests, Lockheed Advanced Ice Protection System Installed on a UH-1H Helicopter, Final Report, June 1975, USAAEFA Project No. 74-13.

(v) Artificial and Natural Icing Tests for Qualification of the UH-1H, Kit A Aircraft, Letter Report, USAAEFA Project No. 78-21-1.

(vi) Microphysical Properties of Artificial and Natural Clouds and Their Effects on UH-1H Helicopter Icing, Report USAAEFA Project No. 78-21-2.

(vii) Helicopter Icing Spray System (HISS) Nozzle Improvement Evaluation, Final Report, September 1981, USAAEFA Project No. 79-002-2.

(viii) Artificial and Natural Icing Tests of the YCH-4TD, Final Report, May 1981, USAAEFA Project No. 79-07.

(ix) Limited Artificial Icing Tests of the OV-ID, Letter Report, July 1981, USAAEFA Project No. 80-16, (Limited Distribution).

(x) JUH-IH Ice Phobic Coating Tests, Final Report, July 1980, USAAEFA Project No. 79-02.

(xi) Artificial and Natural Icing Tests, Production UH-60A Helicopter, Final Report, June 1980, USAAEFA Project No. 79-19.

(xii) Helicopter Icing Spray System (HISS) Evaluation and Improvements, Letter Report, June 1981, USAAEFA Project No. 80-04.

(xiii) Artificial Icing Test of CH-47C Helicopter with Fiberglass Rotor Blades, Final Report, July 1979, USAAEFA Project No. 78-18.

(xiv) Limited Artificial and Natural Icing Tests, Production UH-60A Helicopter (Reevaluation), Final Report, August 1981, USAAEFA Project No. 80-14.

(6) Further Icing Experiments on an Unheated Nonrotating Cylinder, National Research Council, Canada Report LTR-LT-105, dated November 1979, by J.R. Stallabrass and P.F. Hearty.

(7) Ludlam, F.H., Heat Economy of a Rimed Cylinder, Quarterly Journal, Royal Meteorological Society, Vol. 77, 1951.

(8) U.S. Army AMRDL Reports:

(i) USAAMRDL TR 73-38, Ice Protection Investigation For Advanced Rotary Wing Aircraft, J.B. Werner, August 1973, AD 7711182.

(ii) Werner, J.B., The Development of an Advanced Anti-Icing/Deicing Capability for U.S. Army Helicopters, Volume 1, Design Criteria and Technology Considerations, USAAMRDL - TR-75-34A, Eustis Directorate, U.S. Army Air Mobility R&D Laboratory, November 1975, AD A019044.

(iii) Werner, J.B., The Development of an Advanced Anti-Icing/Deicing Capability for U.S. Army Helicopters, Volume 2, Ice Protection System Application to the UH-1H Helicopter, USAAMRDL - TR-75-34B, Eustis Directorate, U.S. Army Air Mobility Research and Development Laboratory, November 1975, AD A019049.

(iv) USAAMRDL-TR-76-32, Ottawa Spray Rig Tests of an Ice Protection System Applied to the UH-1H Helicopter, November 1976, AD A0034458.

(v) USARTL-TR-78-48, Icing Tests of a UH-1H Helicopter with an Electrothermal Ice Protection System Under Simulated and Natural Icing Conditions, April 1979.

(vi) USAAMRDL-TR77-36, Final Report, Natural Icing Flights and Additional Simulated Icing Tests of a UH-IH Helicopter Incorporating an Electrothermal Ice Protection System, July 1978, AD A059704.

(9) Technical Feasibility Test of Ice Phobic Coatings for Rain Erosion in Simulated Flight Conditions, U.S. Army Test and Evaluation Command, Final Report, 4-AI-192-IPS-001, August 1980.

(10) Technical Feasibility Test of Ice Phobic Coatings in Simulated Icing Flight Conditions, U.S. Army TECOM, Final Report, 4-CO-160-000-048, September 1980.

(11) Aircraft Icing, NASA Conference Publication 2086, FAA-RD-78-109, July 1978.

(12) Helicopter Icing Review, FAA Technical Center, Final Report, FAA-CT-80-210, September 1980.

(13) National Icing Facilities Requirements Investigation, Final Report, FAA Technical Center, FAA-CT-81-35, March 1981.

(14) Aircraft Icing, AGARD Advisory Report No. 127, November 1978.

(15) Rotorcraft Icing - Review and Prospects, AGARD Advisory Report, AR-166, September 1981.

(16) Advisory Circular 20-117, Hazards Following Ground Deicing and Ground Operations in Conditions Conducive to Aircraft Icing, Dec. 17, 1982.

(17) Olson, W., Experimental Comparison of Icing Cloud Instruments, January 1983, NASA TM 83340.

(18) JUH-1H Redesigned Pneumatic Boot Deicing System Flight Test Evaluation. Hayworth, L., Graham, M., August 1987. USAAEFA Edwards AFB, California. Project No. 83-13.

(19) An Appraisal of the Single Rotating Cylinder Method of Liquid Water Content Measurement, National Research Council Canada Report LTR-LT-92, dated November 1978, by J.R. Stallabrass.

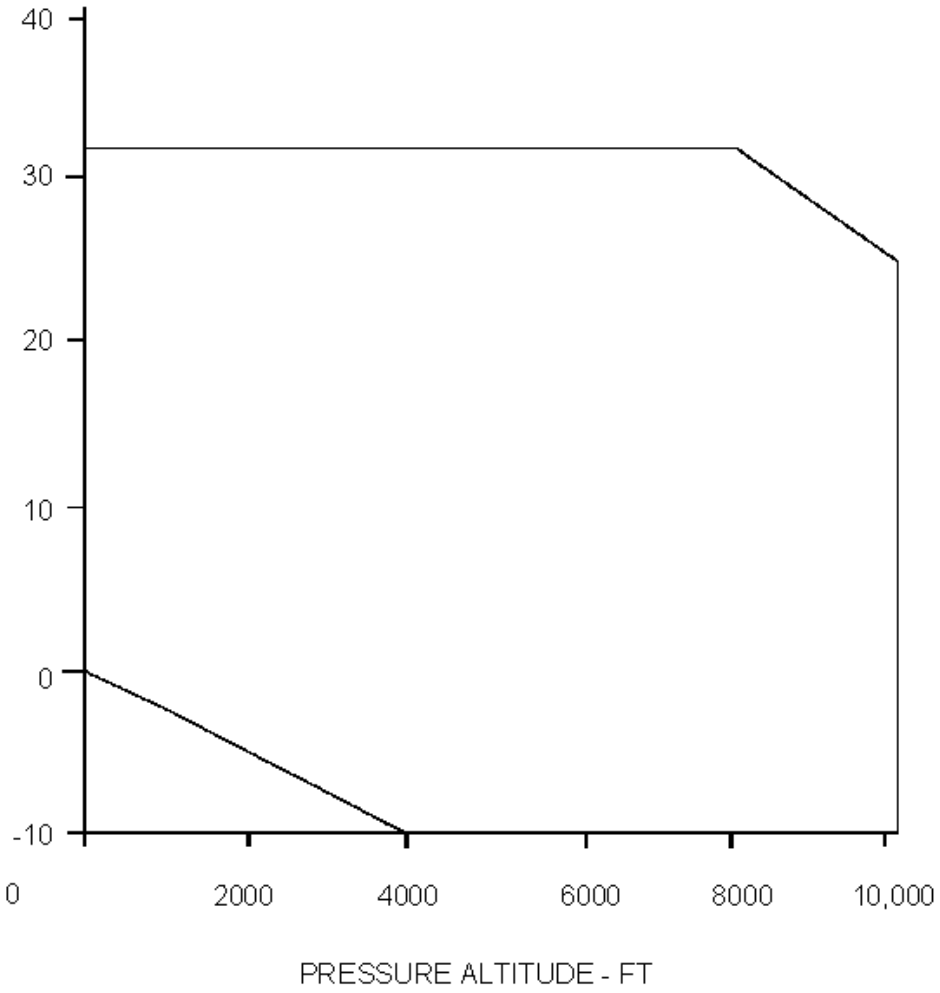

FIGURE AC 27.1419-1 CONTINUOUS ICING - TEMPERATURE VS ALTITUDE LIMITS
Figures 27.1419-1 through 4 represent the approach to a 10,000-foot altitude limit. See Paragraph b(5)(iii) for a discussion on this approach.

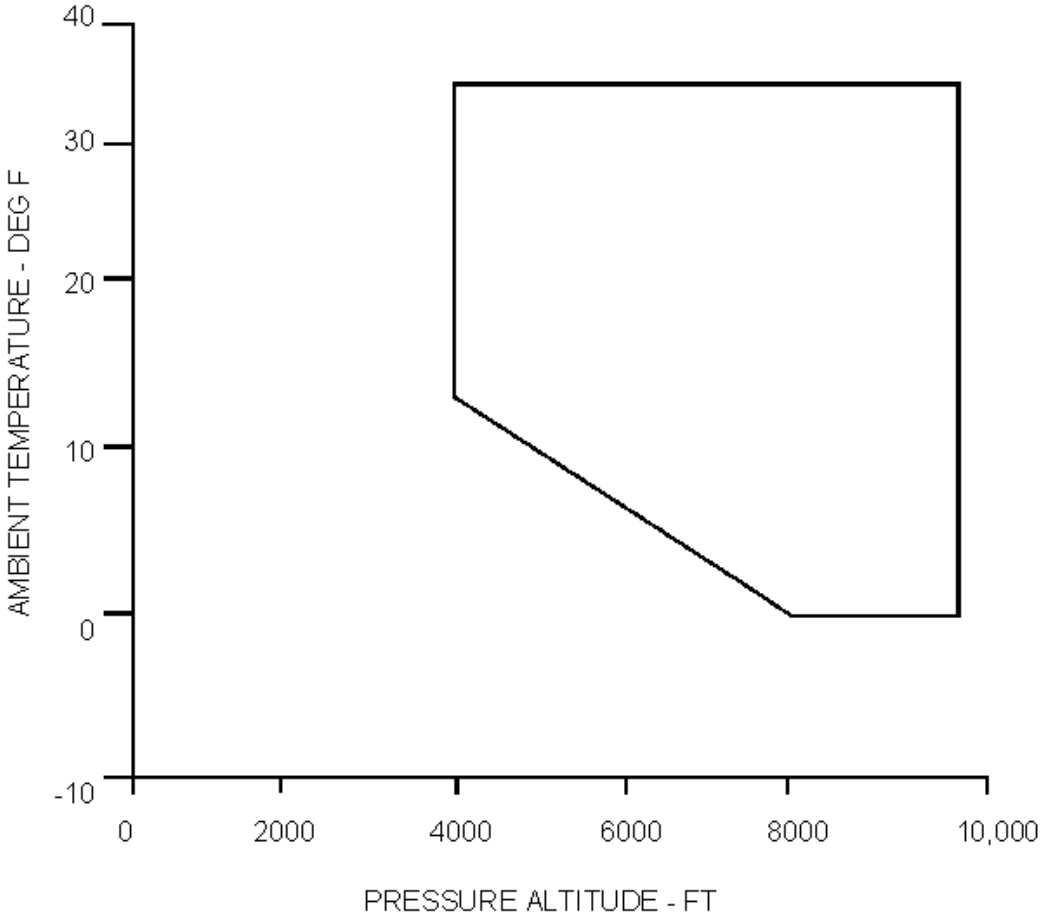

FIGURE AC 27.1419-2 INTERMITTENT ICING - TEMPERATURE VS ALTITUDE LIMITS

Figures AC 27.1419-1 through 4 represent the approach to a 10,000-foot altitude limit. See Paragraph b(5)(iii) for a discussion on this approach.

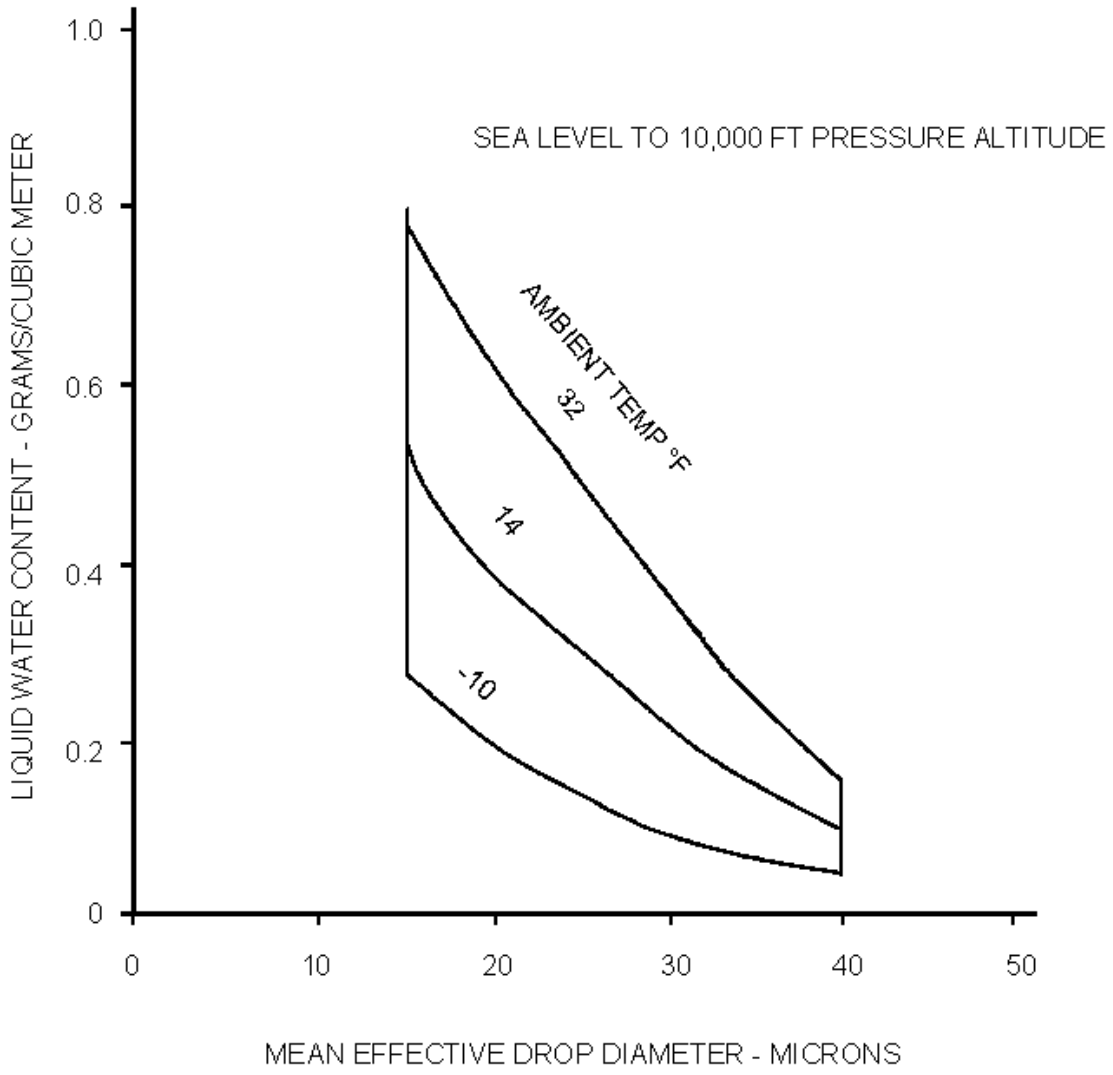

FIGURE 27.1419-3 CONTINUOUS ICING-LIQUID WATER CONTENT VS. DROP DIAMETER

Figures AC 27.1419-1 through 4 represent one approach to a 10,000-foot altitude limit. See Paragraph b(5)(iii) for a discussion of this approach.

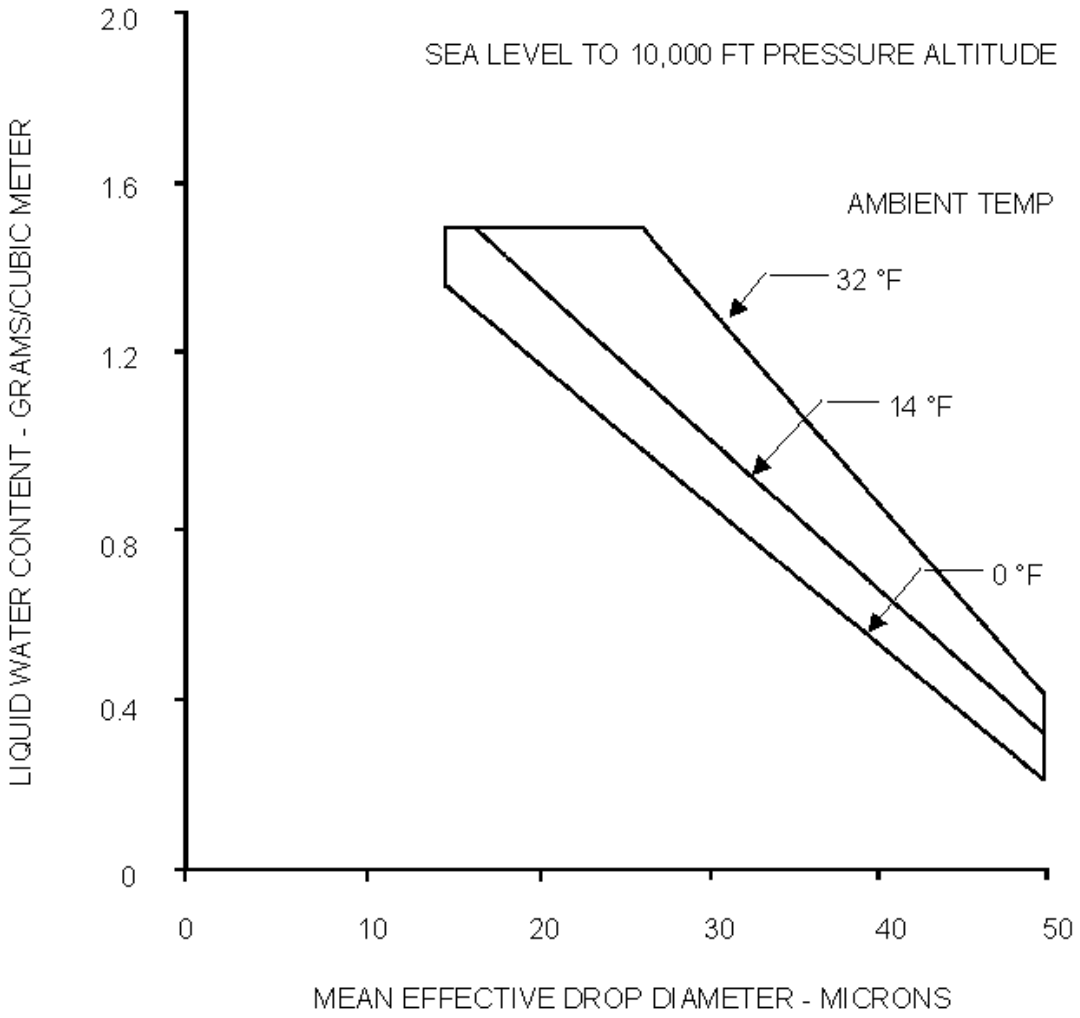

FIGURE AC 27.1419-4. INTERMITTENT ICING-LIQUID WATER CONTENT VS DROP DIAMETER

Figures AC 27.1419-1 through 4 represent one approach to a 10,000-foot altitude limit. See paragraph b(5)(iii) for a discussion of this approach.

SUBPART F - EQUIPMENT

MISCELLANEOUS EQUIPMENT

AC 27.1435. § 27.1435 HYDRAULIC SYSTEMS.

a. References. The following sections of Part 27 are either incorporated in the provisions of § 27.1435 or are otherwise applicable to hydraulic system design: §§ 27.695, 27.861, 27.863, 27.1183, 27.1185, 27.1189, 27.1309, and 27.1322.

b. System Design. It is assumed that the hydraulic system will be utilized to operate utility systems and the primary control system of the rotorcraft.

(1) Section 27.1309(a) and (b) provides for functioning reliably under any foreseeable operating condition and prevention of hazards after any malfunction or failure.

(2) The substantiating data should include a failure analysis that considers every possible system component failure, such as (but not limited to) ruptured lines, pump failure, regulator failure, ruptured seals, clogged filters, broken pilot valve connections, and so forth. Also, consideration of the specific requirements of § 27.1435 should be included.

(3) If the rotorcraft cannot be safely operated without the hydraulic system, the requirements of § 27.1309(a) and (b) are met by dual independent hydraulic systems. From the reservoir, hydraulic pump, regulator, connecting tubing, and hoses through the actuators, there must be no commonality in the fluid-containing components. A break in one system should not result in fluid loss in the remaining systems. The pumps should be separated as far as practicable; i.e., on opposite sides of the rotor drive transmission, on separate engines, or one pump on an engine and the other on the rotor drive transmission. The tubing and hoses should also be routed with as much physical separation as practicable. The purpose of this separation is to prevent total loss of the hydraulic systems in the event of a malfunction such as fire or rotor burst wherein one projectile could disable both systems.

(4) Dual actuators must be designed to ensure that any single failure, such as a cracked housing, broken interconnecting input, or output link, does not result in loss of total hydraulic system function.

(5) If installed, the pressure-indicating system is normally included as a dial, vertical scale, or digital indicator. The indicator should enable the crew to detect pressure trends. Paragraph AC 27.1322 concerns § 29.1322 regarding proper colors for annunciators if used to supplement the indicating system.

(6) A combination of analysis and tests should be included in the substantiating data file to show compliance with the provisions of § 27.1435.

(7) Extra caution should be exercised to ensure that control input forces at the mechanical connection to the actuator pilot valves do not exceed their intended value. Consideration should be given to the most adverse tolerance buildup in parts fabrication and control system rigging.

(8) The substantiating data should show that the hydraulic components will perform their intended function reliably under the most adverse continuous and short-time environmental conditions to which they are exposed. These variables include but are not limited to temperature, humidity, vibration, altitude, and shock. Paragraph AC 27.1309b(2)(i) contains a method of temperature correction to cover the entire operating temperature envelope being certified.

(9) The system component strength must be sufficient for its material fatigue life to exceed the number of cycles imposed by pump ripple pressure.

c. Installation Precautions and Fire Protection.

(1) All components and tubing routed through fire zones may be designed to comply with the fire protection requirements of §§ 29.1183, 29.1185, and 29.1189. As an alternative, a fireproof shield may be used around the component to be protected. The component should be sufficiently protected to assure fluid leakage will not occur and fuel the fire.

(2) All hydraulic lines should be sufficiently isolated from the engine, bleed air lines, environmental control unit, oil cooler, or other heat source to ensure expected line life.

(3) If flammable hydraulic fluid is used, the hydraulic components should be isolated from ignition sources to ensure that failure of any of the hydraulic components will not result in a fire or explosion. In the case of electrical ignition sources in the proximity of hydraulic components, the electrical equipment should be hermetically sealed or otherwise substantiated as not being an ignition source (reference paragraph AC 27.1309b(1)(i)).

(4) The installation detail should be thoroughly reviewed for adequacy of line clamping and clearance from sharp edges. As much physical separation as possible should be provided between hydraulic lines and electrical cables.

(5) While the control system is being moved from stop to stop, observation should be made to determine that hose flexing and tube bending is minimized.

d. Testing.

(1) Individual components should be substantiated by either a vendor's or a primary manufacturer's laboratory test reports. These tests should establish performance ratings such as pressures, flow rates, environmental capability, etc., to be approved.

(2) After the total system is installed, ground tests should be conducted to ensure the system performs as intended and that each component is functioning within its design rating. System testing should consider the provisions of § 27.1435(b).

(3) If the total system design permits each combined independent power source and actuator to be disabled by shutoff valves, engine shutdown, etc., each combination should be disabled and the remaining combination verified to perform the necessary control functions. The test should be accomplished again with the functioning combination disabled and the disabled combination functioning. These tests should be accomplished first by ground tests, then repeated in flight.

(4) Temperature and pressure instrumentation should be provided at the critical points in the system. Temperature results should be corrected for hot day conditions. (Paragraph AC 27.1309b(2)(i) gives a recommended procedure.)

(5) All controls should be cycled throughout their complete range of travel while accomplishing the provisions of paragraph d(2) above.

(6) Satisfactory hydraulic system performance should be verified while the pump drive sources (rotor, engine, etc.) are individually varied throughout their approved operating range.

(7) Flight tests should be conducted throughout all altitudes, maneuvers, and control ranges while the system is instrumented as in paragraphs d(2) and (4) above to determine that component ratings are not exceeded.

AC 27.1457. <u>§ 27.1457 (Amendment 27-22) COCKPIT VOICE RECORDER</u>.

a. <u>Explanation</u>. The function of the cockpit voice recorder (CVR) is to provide a record of the crew communications preceding and during rotorcraft accidents. Over the last several years, the National Transportation Safety Board (NTSB) has determined that CVR's are invaluable in determining probable cause of an accident. Because of this fact and mandates of Congress, the use of CVR's is required by the operating rules on many rotorcraft involved in passenger-carrying operations.

b. <u>Procedures</u>. The following areas are of particular consideration in the approval of a CVR installation:

(1) <u>Equipment Qualifications</u>. The CVR should be approved. The most common way of obtaining an approval is to qualify the CVR (and associated control panel, if appropriate) to TSO C84 or C123.

(2) Cockpit Area Microphone (CAM). The third channel of recorded information is specified to be from a cockpit area microphone or from voice activated lip microphones at the first and second pilot stations. It should be noted that a continuously recording or “hot” microphone at both the first and second pilot stations would satisfy this CAM requirement. Due to the ambient noise level in rotorcraft, the use of “hot” microphone results in objectionable constant hissing in the pilot’s headsets. Therefore, it is recommended that “hot” microphones not be used on rotorcraft.

(3) CVR Mechanical Installation. The CVR or the portion thereof which contains the recording should be physically located to enhance the probability of the recording surviving a crash. Normally, such a location would be in the lower portion of the rotorcraft as far aft as possible.

(4) Intelligibility of Recordings. Tests should be accomplished to determine that the recording is intelligible enough to make a positive identification of the speaker and the words or phrases spoken. This is usually accomplished by flight operations to produce the maximum cockpit background noise. The operation should provide for the normal speech of all crew members to be recorded on the pertinent channels. Then, during playback, preferably using a different listener, the listener should be able to identify the different crew members, the words and phrases spoken by the crew, and the radio communications made by and to the crew. The use of special filters and multiple playbacks to improve intelligibility is acceptable.

(5) Electrical Power Supply. The rule requires that the CVR should be supplied with power from the most reliable source that does not jeopardize essential or emergency loads. Since the functioning of the CVR is required by operating rules for some operations, it should be given priority over other nonessential loads.

(6) Self-Test Function. The CVR should be provided with a means in the cockpit that will allow a test to ensure the CVR is functioning properly. This may be accomplished by a manual playback feature.

(7) Bulk erasure. If this function is provided, the installation should be as follows:

(i) Any probable malfunction will not cause erasure of the recording medium.

(ii) The crash impact forces will not cause activation of the bulk erasure function.

(iii) Inadvertent actuation of the bulk erasure function is minimized. Usually, this is accomplished by requiring two separate actions to operate the bulk erasure.

AC 27.1459. § 27.1459 (Amendment 27-22) FLIGHT RECORDERS.

a. Explanation. The function of the flight recorder, sometimes referred to as a flight data recorder, is to provide a record of various aircraft and air data parameters during the operation of the rotorcraft. This data is utilized by accident investigators to aid in determination of the probable cause of an accident. The problems associated with acquisition of this data in aircraft not equipped with flight recorders have been complicated by the use of advanced instrument systems such as EFIS, FADEC, EICAS, and IDS. The very nature of the operation of these systems precludes the deduction of post accident data, as was possible with mechanical and electromechanical instruments, annunciators, hydromechanical engine controls, and switches. The National Transportation Safety Board (NTSB) therefore made a recommendation to the FAA that aircraft should be required to have flight recorders. Subsequently Congress mandated that flight recorders be required on many rotorcraft involved in passenger-carrying operations in accordance with FAR 91 and FAR 135.

b. Procedures. The following areas are of particular consideration in the approval of a flight data recorder installation.

(1) Equipment Qualification. The recommended procedure to obtain an approval for the flight recorder (and associated control panel, if appropriate) is to qualify the flight recorder to TSO C-124. The required underwater locating device should be qualified to the provisions of TSO C-121.

(2) Recorded Parameters and Accuracy.

(i) Airspeed. The installed flight recorder should record the airspeed with an accuracy of 3 percent or 5 knots (whichever is greater) from a speed of 20 knots to a speed of 80 percent more than V_Y.

(ii) Flight Recorder. The flight recorder should be capable of recording the pressure altitude of the rotorcraft with a range of -1,000 feet to the maximum certified altitude. The error of this recording at sea level should not exceed ±50 feet.

(iii) Direction. The flight recorder should be capable of recording the magnetic heading of the rotorcraft within at least 10° for any heading. Larger deviations caused by the temporary operation of high current electrical devices such as heated windshields are acceptable.

(iv) Vertical Acceleration. The flight recorder should be capable of recording the normal acceleration of the center of gravity of the rotorcraft. The recommended range of this recording is an envelope of -3 to +6 G with an accuracy of at least ±0.2 G.

(v) Time Correlation. The flight recorder should provide a time scaled correlation between the data recorded and the time at which this information was

presented to the first pilot via the required flight instruments. This correlation should normally be established before flight, and should have an accuracy rate that does not diverge by more than 4 minutes and 4 seconds in 8 hours.

(vi) Caveat. It should be noted that even though the requirements outlined above provide for compliance with the specific provisions of § 27.1459 regarding the acquired data and its accuracy, a flight recorder certified to these minimum standards will not meet the requirements of Appendix F of FAR 91 or Appendix C of FAR 135. If the flight recorder is to be used to comply with these operating rules, it is recommended that the appropriate appendix be consulted prior to requesting certification. The approved configuration may then be certified as meeting the requirements of the appropriate appendix.

(3) Flight Recorder Mechanical Installation. The non-ejectable flight recorder or the portion thereof which contains the recorded data should be physically located to enhance the probability of the recording surviving a crash. Normally, such a location would be in the lower portion of the rotorcraft as far aft as possible. However, other locations in the rotorcraft may be suitable to meet the requirement to “minimize the probability of container rupture resulting from crash impact and subsequent damage to the record from fire.” The normal accelerometer should be located within the most restrictive center of gravity of the rotorcraft. The required underwater locator is usually mounted to the case of the flight recorder.

(4) Electrical Power Supply. The rule requires that the flight recorder should be supplied with power from the most reliable source that does not jeopardize essential or emergency loads. Since the functioning of the flight recorder is required by operating rules for some operations, it should be given priority over other nonessential loads.

(5) Self-Test Function. The flight recorder should be provided with a preflight test that will provide confirmation that the recorder and its recording medium are functioning properly.

(6) Data Erasure Feature. If this function is provided and the flight recorder is not powered solely by an engine or transmission driven generator, the installation should provide the following features:

(i) Any probable malfunction will not cause erasure of the recording medium.

(ii) The crash impact forces will not cause activation of the data erasure function.

(iii) Inadvertent actuation of the data erasure function is minimized. Usually, this is accomplished by requiring two separate actions to operate the data erasure.

AC 27.1461. § 27.1461 (Amendment 27-2) EQUIPMENT CONTAINING HIGH ENERGY ROTORS.

a. Explanation. This section contains requirements for the installation of equipment containing high energy rotors. A high energy rotor is any rotor that has sufficient kinetic energy to cause damage to surrounding structure, wiring, and equipment if a failure occurs. Turboshaft engine and APU rotors are not covered by this paragraph. One of the following requirements of § 27.1461 must be met.

(1) Paragraph (b) deals with damage tolerance, containment, and control devices.

(2) Paragraph (c) deals with containment and inoperative speed controls.

(3) Paragraph (d) deals primarily with equipment location.

b. Procedures.

(1) Compliance with § 27.1461(b) can be shown by a combination of analysis and test. A failure modes and effects and a stress analysis, together with a dynamic test, could be used to verify that the rotor would withstand the damage from environmental effects, and that the rotor case would contain any parts that may separate from the rotorshaft. The analysis and test should include a demonstration of the control device's ability to prevent limitations from being exceeded.

(2) If compliance with the requirements of § 27.1461(c) is chosen, a test must be conducted which demonstrates that all parts from any type failure of a high energy rotor will be contained when that rotor is operating at the highest speed obtainable, with all speed control devices inoperative. This containment should not damage any components, systems, or surrounding structures that are essential for continued safe flight.

(3) If compliance with § 27.1461(d) is chosen, the location of the high energy rotor must be in an area where uncontained failed parts will not damage other components, systems, or surrounding structure which are essential for continued safe flight. It must also be shown that there is no possibility for failed, uncontained parts to enter the cabin area and endanger any occupant.

CHAPTER 2. PART 27
AIRWORTHINESS STANDARDS
NORMAL CATEGORY ROTORCRAFT

SUBPART G - OPERATING LIMITATIONS AND INFORMATION

OPERATING LIMITATIONS

AC 27.1501. § 27.1501 (Amendment 27-14) OPERATING LIMITATIONS--GENERAL.

Explanation. This section simply requires specified operating limitations in addition to any other information necessary for the safe operation of the rotorcraft to be determined. Secondly, it requires that this pertinent information be made readily available to the crew members as required in the various sections of this subpart.

AC 27.1503. § 27.1503 AIRSPEED LIMITATIONS: GENERAL.

a. Explanation. This section requires that a safe operating speed range be established for all rotorcraft. If the safe operating speed range varies with operating conditions (rotor speed, power, etc.), ambient conditions (altitude and/or temperature), rotorcraft configuration (gross weight, center of gravity, and/or external equipment), or type of operation (in ground effect (IGE), instrument flight rules (IFR), etc.), airspeed limitations that correspond with the most critical combinations of these factors must be established.

b. Procedures.

(1) Airspeed Limitations. The airspeed limitations for each critical combination of factors are established by tests or analyses and verified by flight test. The following are airspeed limitations that are typically required depending on the particular rotorcraft design:

(i) V_{NE} (Power-On). See paragraph AC 27.1505.

(ii) V_{NE} (One-Engine-Inoperative (OEI)). See paragraph AC 27.1505.

(iii) V_{NE} (Power-Off). See paragraph AC 27.1505.

(iv) V_{LO} (Maximum Airspeed for Landing Gear Operation). Compliance with structural, handling qualities, and controllability requirements should be demonstrated at the airspeed limit.

(v) V_{LE} (Maximum Airspeed Landing Gear Extended). If this airspeed limit differs from the maximum gear operation speed, compliance with the applicable structural, handling qualities, and controllability requirements should be demonstrated.

(vi) Low Speed Flight Limitation. It is permissible for the applicant to establish minimum airspeed operating limitations as a function of weight, altitude, and temperature as long as there is still a practical flight envelope.

(vii) V_{MINI} (Minimum IFR Speed). The minimum speed for which compliance with the IFR handling qualities requirements has been demonstrated should be established as a limit for IFR operations.

(viii) Maximum Sideward and Rearward Flight Speed. The maximum demonstrated sideward flight or crosswind hover and rearward flight or tailwind hover airspeeds should be provided in the RFM. If these maximum speeds resulted from a control margin limitation, they should be included in the airspeed limitations section of the RFM. If adequate control margin remained for the critical combination of rotorcraft configuration and ambient conditions, the maximum demonstrated sideward or rearward flight airspeeds should be included in either the performance section or the limitations section of the RFM as the applicant desires.

(ix) Maximum Airspeeds for Special Configurations or Special Equipment. Standard configuration airspeed limits frequently have to be reduced for specific changes or external modifications. The following are examples of special equipment or configurations that have required additional airspeed limitations:

(A) Doors open or doors off.

(B) External hoist/cargo hook (stowed).

(C) Fixed or emergency flotation gear.

(D) External avionics equipment (large antennas, wires, etc.)

(E) External fuel tanks.

(F) Skid pad or ski equipment modifications to standard skid type landing gear.

(x) Maximum Airspeeds after Failure of Required Equipment. Rotorcraft that require auxiliary equipment such as stability augmentation systems to comply with FAR requirements throughout the approved operating envelope frequently require airspeed limitations following failure of part or all of this system in order to comply after the failure. The following are examples of auxiliary equipment that have required maximum airspeed limitations after failure of all or part of the system.

(A) Stability Augmentation Systems (SAS).

(B) Automatic Flight Control Systems (AFCS).

(C) Fly-by-Wire Elevator Systems (FBW).

(D) Air Data Computer Systems (ADC).

(2) Groundspeed Limitations. Although not specifically required by this "airspeed limitations" regulation, it may be necessary to establish "groundspeed" limitations for wheel-gear-equipped rotorcraft and maximum landing touchdown groundspeeds for utility type, float-gear-equipped rotorcraft. These wheel gear limitations are required to show compliance with the ground-handling characteristic requirements, structural strength requirements, or the ground-loads requirements. However because of the operational similarity of groundspeed limits to airspeed limits, it is a common practice to include groundspeed limitations under the airspeed limitations heading in the flight manual. For this reason, groundspeed limitations are included in this paragraph of the AC. Groundspeed limitations should be established with adequate safety margins to account for the possible inaccuracies associated with the necessity for the pilot to estimate groundspeed from indicated airspeed and available wind speed and direction information during actual operations. The following are examples of groundspeed limitations that have been required during past type certification programs:

(i) Maximum Groundspeed for Takeoff or Landing. The maximum acceptable groundspeed that can safely be used for wheel gear equipped rotorcraft takeoff and landing maneuvers should be determined based on landing gear limitations or ground controllability limitations. This speed should be fast enough to account for landing touchdown speeds at the maximum approved density altitude for normal takeoff and landing.

(ii) Maximum Groundspeed for Brake Application. The maximum speed at which the wheel brakes may be applied without exceeding maximum brake energy capabilities should be determined for wheel equipped rotorcraft. This speed should be verified by test throughout the approved takeoff and landing envelope of the rotorcraft. The critical combination of gross weight and density altitude for brake energy considerations may be determined by analysis to minimize the required amount of testing. The maximum brake application groundspeed should be high enough to encompass brake application during landing at the maximum approved density altitude.

(iii) Other Groundspeed Limitations. For some rotorcraft designs with skid type landing gear, it may be necessary to establish a maximum landing touchdown speed for normal operations to comply with structural requirements. Optional equipment configurations such as float equipment, skis, etc., which are attached to conventional landing gear skids may require maximum landing groundspeed limits that are less than the limit for the basic rotorcraft. Rather than limitations, operational information may be sufficient for skid type landing gear and for utility or float landing gear.

AC 27.1505. § 27.1505 (Amendment 27-21) NEVER-EXCEED SPEED.

a. Explanation.

(1) General. This rule requires the never-exceed speed (V_{NE}) for both power-on and power-off flight to be established as operating limitations. The rule specifies how to establish and substantiate these limits.

(2) Power-on Limit.

(i) The all-engines-operating V_{NE} is established by design and substantiated by flight tests. The V_{NE} limits are the most conservative value that demonstrates compliance with the structural requirements (§ 27.309), the maneuverability and controllability requirements (§ 27.143), the stability requirements (§§ 27.173 and 27.175), or the vibration requirements (§ 27.251). The power-on V_{NE} will normally decrease as density altitude or weight increases. A variation in rotor speed may also require a variation in the V_{NE}. The regulation restricts to two the number of variables that are used to determine the V_{NE} at any given time so that a single pilot can readily ascertain the correct V_{NE} for his flight condition with a minimum of mental effort. Helicopter manufacturers have typically presented never-exceed-speed limitation data as a function of pressure altitude and temperature. This information was placarded as well as contained in the flight manual. As the weight of some derivative models was increased, the FAA/AUTHORITY accepted altitude/temperature/V_{NE} limitations that were categorized or contained within a weight range. Literal compliance with the regulation then required that the takeoff weight be calculated and then the indicated, appropriate airspeed limitation chart or placard be used for the entire flight. However V_{NE} charts or placards based on longitudinal center-of-gravity (c.g.) have been found to be unacceptable, since the same chart would potentially not be used throughout the flight and the pilot would thus be dealing with more than two variables to determine V_{NE}. Alternatively, rotorcraft that are equipped with air data computers or other similar equipment are allowed to vary as many parameters as desired, if the final results are no more than two parameters that define the V_{NE} displayed to the pilot in an unambiguous manner. These rotorcraft must also have a method for determining V_{NE} that complies with the regulation in the event the air data computer system fails. This method is usually more conservative than the automatic system because of the limitation in the number of parameters that can be varied.

(ii) To ensure compliance with the structural requirements (§ 27.309), vibration requirements (§ 27.251), and flutter requirements (§ 27.629), the all-engines-operating V_{NE} should be restricted so that the maximum demonstrated main rotor tip Mach number will not be exceeded at 1.11 V_{NE} for any approved combination of altitude and ambient temperature. Previous rotorcraft cold weather tests have shown that the rotor system may exhibit several undesirable and possibly hazardous characteristics due to compressibility effects at high advancing blade tip Mach numbers. As the center of pressure of the advancing rotor blade moves aft near the blade tip due to the formation of localized upper surface shock waves, rotor system loads may

increase, the rotor system may exhibit an aerodynamic instability such as rotor weave, rotorcraft vibration may increase substantially, and rotorcraft static or dynamic stability may be adversely affected. Which, if any, of these adverse characteristics are exhibited at high rotor tip Mach numbers is dependent on the design of each particular rotor system. FAA/AUTHORITY experience with high advancing blade tip Mach number has shown that different types of rotor systems (articulated, semi-rigid, rigid, etc.) have various adverse characteristics. Therefore, it has been FAA/AUTHORITY policy to establish V_{NE} so that it is not more than 0.9 times the maximum speed substantiated for advancing blade tip Mach number effects for the critical combination of altitude, approved power-on rotor speed, and ambient temperature conditions. This policy was incorporated as a specific regulatory requirement with Amendment 27-21 to § 27.1505. High main rotor tip Mach numbers obtained power off at higher than normal main rotor rotational speeds should not be used to establish the maximum power-on tip Mach number V_{NE} limit. In addition, since the onset of adverse conditions associated with high tip Mach numbers can occur with little or no warning and amplify very rapidly, no extrapolation of the maximum demonstrated main rotor tip Mach number V_{NE} limitation should be allowed.

(iii) A maximum speed for use of power in excess of maximum continuous power (MCP) should be established unless structural requirements have been substantiated for the use of takeoff power (TOP) at the maximum approved V_{NE} airspeed. TOP is intended for use during takeoff and climb for not more than 5 minutes at relatively low airspeeds. However, FAA/AUTHORITY experience has shown that pilots will not hesitate to use TOP at much higher than best-rate-of-climb airspeeds unless a specific limitation against TOP use above a specified airspeed is included in the RFM. Structural and fatigue substantiations have not normally included loads associated with the use of TOP at V_{NE}; thus, a TOP airspeed limitation should be established from the structural substantiation data to preclude the accumulation of damaging rotor system and control mechanism loads through intentional use of the TOP rating at high airspeeds.

(iv) A one-engine-inoperative (OEI) V_{NE} is generally established through flight test and is usually near the V_H or V_{NE} of the rotorcraft. It is the highest speed at which the failure of the remaining engine must be demonstrated. For rotorcraft with more than two engines, the appropriate designation would be “one-engine-operating” V_{NE} and would be that speed at which the last remaining engine could be failed with satisfactory handling qualities. It is possible, although believed improbable, that a rotorcraft with more than two engines could have different V_{NE}s depending upon the number of engines still operating. It is recommended that the OEI V_{NE} not be significantly lower than the OEI best range airspeed. A multiengine rotorcraft may require an OEI V_{NE} if the handling qualities following the last remaining engine failure are not satisfactory or if the rotor speed decays below the power-off transient limits at the all-engine-operating V_{NE}.

(3) Power-off Limits. A power-off V_{NE} may be established either by design or flight test and should be substantiated by flight tests. A power-off V_{NE} is generally required if the handling qualities or stability characteristics at high speed in autorotation are not acceptable. A limitation of the power-off V_{NE} may also be used if the rotorcraft has undesirable or objectionable flying qualities, such as large lateral-directional oscillations, at high autorotational airspeeds. The power-off V_{NE} must meet the same criteria for control margins as the power-on V_{NE}. The regulation requires that the power-off V_{NE} be no less than the speed midway between the power-on V_{NE} and the speed used to comply with the rate of climb requirements for the rotorcraft. When the regulation was written, rotorcraft V_{NE} speeds were significantly lower than those of recently certificated rotorcraft. The high V_{NE} speeds of current rotorcraft result in relatively high values for power-off V_{NE}. Speeds lower than those specified in the regulation have been found acceptable through a finding of equivalent safety if the selected power-off V_{NE} is equal to or greater than the power-off speed for best range. In any case, the power-off V_{NE} must be a high enough speed to be practical. A demonstration is required of the deceleration from the power-on V_{NE} or OEI V_{NE} to the power-off V_{NE}. The transition must be made in a controlled manner with normal pilot reaction and skill.

b. Procedures. The tests to substantiate the different V_{NE} speeds are ordinarily conducted during the flight characteristics flight tests. The flight test procedures are discussed for the various limiting areas in earlier paragraphs of this document. Static stability test techniques are covered in paragraph AC 27.175 and the vibration test techniques in paragraph AC 27.251.

AC 27.1509. § 27.1509 ROTOR SPEED.

a. Explanation.

(1) General. This rule requires minimum and maximum power-off rotor speeds to be established as operating limitations. It also specifies the appropriate margins below and above these limits that must be substantiated structurally and by flight tests. In addition to addressing power-off limits, the rule requires that minimum power-on RPM be established as an operating limit, and it specifies conditions, by reference, for establishing a minimum appropriate power-on speed.

(2) Power-off Limits. The power-off or autorotational RPM limits are established by design and substantiated by structural testing. Limits are confirmed during flight testing. Critical components must be designed for RPM values at least 5 percent above and below the maximum and minimum approved RPM values respectively. This 5 percent conservative speed requirement is in addition to the other structural safety factors built into the design requirements. A transient limit lower than the minimum in-flight RPM (power-off) will be defined to cover the final phase of a total power-off landing. Maximum weight is ordinarily critical for both tests. At low RPM, high coning angles can produce high stress levels in blade bending. Large flapping angles or controllability problems may also develop. At high RPM values, centrifugal

forces on the blades are at their highest and stress levels on rotating components such as blade grips may be critical. If a particular model has a very large weight spread between minimum and maximum gross weights, the applicant may elect to specify two ranges of power-off RPM dependent upon weight. This may be needed to ensure adequate power-off rotor RPM with collective full down without requiring the very low power-off rotor speeds at maximum weight, a condition which would be inappropriate for operation of the rotorcraft in service. Transient power-off RPM ranges may also be approved if needed for engine failure conditions; however, these transients must also be substantiated structurally and in flight.

(3) Power-on Limits. The minimum power-on rotor speed must be established so that it is no less than the minimum rotor speed that has been established structurally. The minimum power-on speed also cannot be less than those values achieved during any of the critical maneuvers during flight test substantiation of the rotorcraft. A 5 percent margin between the substantiated value and the limit value is not required as in the power-off case. This rule also makes reference to § 27.33(a)(1) and (b)(1) for establishing the minimum power-on value. The reference to paragraph (a)(1) is intended to ensure that the minimum power-on RPM value is low enough to accommodate the RPM values which will occur as a result of power changes and flight maneuvers expected in service. The reference to (b)(1) establishes the requirement that the minimum power-on RPM can not be greater than the minimum RPM used to determine the appropriate setting of the main rotor high pitch stop. Although the maximum power-on value is not specifically referred to in this section, it must be established as a limitation per § 27.309. In addition, for compliance with the requirements of § 27.141(b) regarding smooth transition from power-on to power-off flight, the power-on maximum limit should not be greater than the power-off maximum limit and the power-on minimum limit should not be less than the power-off minimum limit.

(4) Transient Limits. Transient limits must be substantiated and approved in a similar manner. Transient limits may be outside of the steady state “red-line” limits.

b. Procedures.

(1) Tests for substantiation of stress and vibration at the 5 percent underspeed and overspeed conditions in autorotation are ordinarily conducted as a part of the flight strain survey. For purposes of finding compliance with this rule, it is suggested that as a minimum, FAA/AUTHORITY certification personnel witness applicable portions of the test program and monitor telemetry or flight recorded data, as necessary, to verify compliance with this rule. Tests at maximum weight and at a relatively light weight condition are normally sufficient. Tests must be conducted at speeds up to V_{NE} (power-off) at 105 percent of maximum RPM and 95 percent of minimum RPM. It is also appropriate to investigate speeds to 1.1 V_{NE} (power-off) at maximum and minimum power-off RPM values. The normal low pitch stop may need to be downrigged in order to achieve the high RPM values at high speed. This feature should be coordinated with the manufacturer prior to the flight strain survey to ensure necessary conditions are

achieved. It may be difficult to obtain minimum power-off RPM prior to encountering retreating blade stall at combinations of high weight, high collective pitch, low rotor speed, and high forward speed. In this case V_{NE} (power-off) can either be decreased in accordance with § 27.1505(c) or the low RPM range can be evaluated in a transient manner during engine failure testing at high speed. Any condition in which blade stall is suspected should, of course, be investigated with a great deal of caution and build-up testing is recommended. The transient low RPM limit for power-off landings may be tested only during actual power-off landings. In that case, the 5 percent margin is not required.

(2) Testing for suitable minimum and maximum power-on RPM values may be conducted during the designated FAA/AUTHORITY flight test program. The combined engine and governor response must allow accomplishment of all appropriate flight maneuvers without exceeding minimum or maximum power-on rotor limits. As in the power-off case, appropriate transient ranges and limits may be approved when properly substantiated. Transient ranges should be evaluated using similar methods and techniques to those described above. Power-on RPM determination must include not only rotor system considerations but engine and drive system characteristics as well. It is important to remember that all power-on ranges must be eligible under the Part 33 engine approval and that the power-off range must include adequate margins from potentially hazardous drive system phenomena, such as drive shaft whirl modes.

AC 27.1519. 27.1519 (Amendment 27-21) WEIGHT AND CENTER OF GRAVITY.

a. Explanation. This rule requires that weight and center of gravity (CG) combinations which are substantiated structurally and also found satisfactory during flight tests (per §§ 27.25 and 27.27) must be established as operating limits. A related portion in § 27.1583(c) further requires that weight and CG limitations be entered in the RFM limitations section. Both maximum and minimum weight must be established as operating limitations along with the corresponding longitudinal and lateral centers of gravity for each condition. Weight and CG limits are discussed in more detail in paragraphs AC 27.25 and AC 27.27 of this AC.

b. Procedures.

(1) The results of shifts in center of gravity with fuel burn should be evaluated. If it is possible to take off within the approved loading envelope and subsequently burn fuel to a condition which is significantly beyond the approved weight/CG envelope, then there should be appropriate instructions in the loading and/or operating procedures of the RFM to avoid this condition.

(2) Typical loading conditions should not result in weight/CG combinations outside of approved limits. A minimum of two loadings, appropriate to the rotorcraft configuration, should be evaluated. These should include critical combinations of maximum/minimum variables for fuel, passengers, and crew. If this results in loading

outside approved limits, special interior placarding or cautionary information should be provided in appropriate sections of the RFM.

AC 27.1521. § 27.1521 (Amendment 27-14) POWERPLANT LIMITATIONS.

a. Explanation.

(1) This rule requires that the various parameters and operating conditions listed under each type of powerplant operation be evaluated and established as operating limitations. The procedures for establishing and verifying each powerplant limitation are discussed in the powerplant section of this AC. This rule requires that powerplant limitations be established for two specific types of operation or power ratings; takeoff and continuous. Additional limitations are required to account for engine and transmission cooling and minimum required fuel grade.

(2) Paragraph (e) requires that for turboshaft engines, a limit engine torque be established in addition to the other limiting parameters listed under each type of operation in paragraphs (b) and (c). Compliance with this paragraph requires that a torque limit be established for each approved engine rating (i.e., takeoff, continuous, etc.) even though not specifically stated in the rule.

(3) For rotorcraft equipped with two or more turboshaft engines and seeking approval for one-engine-inoperative (OEI) ratings, the same parameters required for the takeoff and continuous ratings should be established as limitations for each approved OEI rating (i.e., maximum rotational speed, time, gas temperature, and torque). Section 27.923 includes requirements for qualification of the rotor drive system for 2½-minute and 30-minute OEI powers. Section 27.1501(a) requires that any information necessary for safe operation must be established as limitations. Thus the establishment of OEI powerplant limitations is required even though not specifically addressed in § 27.1521 (through Amendment 27-14).

(4) It is important to differentiate between the rotorcraft powerplant limitations and the engine limitations as established under Part 33. For some parameters, these two limits may be identical, but frequently the engines will be capable of exceeding the maximum limitations substantiated for the combined powerplant installation. Limitations established according to this rule may not exceed the engine limitations established in accordance with Part 33 but may be less than the Part 33 limits as desired by the applicant.

b. Procedures.

(1) Determine the limiting parameters for each required power rating according to the requirements of Part 27, Subpart E, Powerplant. (See applicable paragraphs of this AC for detailed procedures.)

(2) Provide the limitations established according to this rule to the rotorcraft crew through placards in accordance with § 27.1541, instrument markings in accordance with § 27.1549 and in the Rotorcraft Flight Manual Limitations Section in accordance with § 27.1583(b). (See paragraphs AC 27.1583 and AC 27.1543.)

AC 27.1521A. § 27.1521 (Amendment 27-23) POWERPLANT LIMITATIONS.

a. Explanation. Amendment 27-23 added §§ 27.1521(g), (h), and (i) that establish and define the powerplant limitations associated with OEI power ratings. The new sections introduce the term "OEI" to emphasize and clarify the limitations on the use of the 2½-minute and 30-minute power ratings. Amendment 27-23 added the introductory phrase "unless otherwise authorized." In order to authorize use of these emergency ratings, additional qualification tests, or other adequate safety measures have been instituted. The sections set forth specific limitations on the use of these emergency ratings. These changes were intended to avoid misconceptions regarding the eligibility of these ratings. Section 27.1521(i) establishes and defines a new continuous OEI power rating using terminology similar to that developed for the 2½-minute and 30-minute power ratings. These new sections ensure proper recognition in the powerplant limitations listing required by § 27.1583(b).

b. Procedures. All of the policy material pertaining to this section remains in effect. Additionally, the following procedures should be considered:

(1) Sections 27.1521(g) through (i) require limitations for OEI operation for multi-turbine engine powered rotorcraft. The same parameters required for the takeoff and continuous ratings should be established as limitations for each approved OEI rating (i.e., maximum rotational speed, time, gas temperature, and torque). Section 27.923 includes requirements for qualification of the rotor drive system for 2½-minute and 30-minute, and continuous OEI powers. Section 27.1501(a) requires that information necessary for safe operation should be established as limitations. Thus the establishment of OEI powerplant limitations is required even though not specifically addressed in § 27.1521.

(2) It is important to differentiate between the rotorcraft powerplant limitations and the engine limitations as established under Part 33. For some parameters, these two limits may be identical, but frequently, the engines will be capable of exceeding the maximum limitations substantiated for the combined rotorcraft drive system. Limitations established according to this rule may not exceed the engine limitations established in accordance with Part 33 but may be less than the Part 33 limits as desired by the applicant.

AC 27.1521B. § 27.1521 (Amendment 27-29) POWERPLANT LIMITATIONS.

a. Explanation. Amendment 27-29 adds §§ 27.1521(j) and (k). The new §§ 27.1521(j) and (k) introduce the 30-second and 2-minute OEI power rating limitations, respectively. These paragraphs define the limitations on the use of the

30-second and 2-minute power ratings using terminology similar to that developed for the 2½-minute and 30-minute power ratings. Additionally, these paragraphs require the ability to detect any damage which occurs due to the use of either 30-second or 2-minute OEI limits and requires that the procedures to inspect for such damage be provided in the instructions for continued airworthiness for either the engine and/or the airframe.

b. Procedures. All of the policy material pertaining to this section remains in effect. Additionally, the following procedures should be considered:

Sections 27.1521(j) and (k) require limitations for 30-second/2-minute OEI operation for multi-turbine engine powered rotorcraft. The same parameters required for the takeoff and continuous ratings should be established as limitations for each approved OEI rating (i.e., maximum rotational speed, time, gas temperature, and torque). These new ratings can only be approved as a rating in conjunction with the other. That is, a rotorcraft with a 30-second OEI rating must also have a 2-minute OEI rating and vice-versa. The 30-second and 2-minute OEI ratings are also limited to use for continued operation of the remaining engine(s) upon failure or precautionary shutdown of an engine. Upon the use of 30-second or 2-minute OEI ratings an inspection for damage to the airframe and/or engine may need to be conducted. The inspection should be accomplished per the procedures furnished by the airframe and engine manufacturers and any damage occurring due to the use of these new ratings should be detected using these inspection procedures. Section 27.923 includes requirements for qualification of the rotor drive system for 30-second and 2-minute OEI powers. Section 27.1501(a) requires that information necessary for safe operation should be established as limitations. The limitation information provided in this paragraph should be provided in the flight manual. This includes a possible requirement for an inspection prior to further flight after the use of either 30-second or 2-minute OEI rating.

AC 27.1523. § 27.1523 MINIMUM FLIGHTCREW.

a. Explanation.

(1) This rule requires that the minimum crew necessary to show compliance with the requirements of Part 27 or for safe operation of the rotorcraft be established as an operating limitation.

(2) The determination of minimum crew requirements is typically based on a subjective pilot assessment of the crew requirements for safe operation of each rotorcraft design. Certain regulations, such as the requirements for instrument flight rules (IFR), have specific quantitative differences between single-pilot and two-pilot requirements. However, most often the minimum crew requirement will be based on more subjective considerations such as location of necessary controls, pilot workload to accomplish required tasks, type of operation, and overall complexity of the rotorcraft design.

(3) Minimum crew requirements for the same type design may vary with the kind of operation. Many rotorcraft have been approved for a single-pilot crew for visual flight rules (VFR) operations but require a two-pilot crew for IFR operations. Other kinds of operations that may require more than one crewmember to meet type certification requirements are night operations, operations into known icing conditions, operations in falling and blowing snow, extended overwater operations, and external load operations.

(4) It is important to distinguish between the minimum crew requirements for compliance with Part 27 type certification regulations and the minimum crew requirements of the various operating regulations (Parts 61, 91, 121, 133, 135, and 137). A rotorcraft may be type certified for a minimum crew of one and still be required to have a crew of two or more by the operating regulations for certain types of operation or by the workload associated with an operating environment. Therefore, an applicant should carefully consider the possible operational uses of any rotorcraft design and become familiar with the applicable operating regulations as well as the type certification requirements early in the design process.

(5) Although the rotorcraft configuration is typically certified with the pilot-in-command station in the right seat, the left seat may be used for the pilot-in-command if, in addition to the flight controls required to control the rotorcraft, the following are included for the pilot: throttle control including ability to shut down all engines, airspeed indication, altitude indication, rotor and engine RPM, and engine torque and exhaust gas temperature. The authority should evaluate a change to the pilot-in-command station.

(6) The applicant is encouraged to contact the responsible type certification office as early in the design phase as possible to initiate the qualitative assessment process. Cockpit layout drawings, instrument panel mockups, and full-scale cockpit mockups can be used to determine if required controls are accessible and to begin the pilot workload assessment for certain operations.

b. Procedures.

(1) General.

(i) A systematic evaluation and test plan is required for any new or modified rotorcraft. The methods for showing compliance should emphasize the use of acceptable analytical, simulation, and flight test techniques. The crew complement should be studied through a logical process of estimating, measuring, and then demonstrating the workload imposed by a particular cockpit design. When the minimum crew requirements have been determined, they should be included in the limitations section of the Rotorcraft Flight Manual in accordance with § 27.1583(d).

(ii) Appropriate analysis should be conducted by the applicant early in the design process. The specific method(s) of analysis should be selected on the basis of

its predictive validity, sensitivity, reliability, applicability to the particular cockpit configuration, and availability of a suitable reference for comparison.

(2) Analytical Approach.

(i) One analytical approach defines workload as a percentage of the time available to perform tasks (Time Line Analysis). This process may be applied to an appropriate set of flight segments in which operationally important time constraints can be identified. This method is useful for evaluation of cockpit changes relating to overt pilot work such as control movements and data inputs. The generally accepted practice involves careful selection of the limited set of flight scenarios and time segments that represent the range of operational requirements (including the range of normal and non-normal procedures.) Time line analysis yields useful data when tasks must be performed within operationally significant time constraints. The adequacy of this method is very much dependent on an accurate determination of the time available. Absolute standards are not available for interpretation of obtained time required scores, but such records can be used to identify high or simultaneous workload demands for later testing in a simulator or aircraft, and comparisons can be made with overt workload demands in proven aircraft. However, the impact of cockpit changes on planning and decision-making is difficult to quantify by this method.

(ii) The most frequently used basis for deciding that a new design is acceptable is a comparison of a new design with previous designs proven in operational service. By making specific evaluations using the acceptable human factors techniques, and comparing new designs to a known baseline, it is possible to proceed with confidence that the changes incorporated in the new designs accomplish the intended result. When the new cockpit is considered, certain components may be proposed as replacements for conventional items, and some degree of rearrangement may be contemplated. New avionics systems may need to be fitted into existing panels, and newly automated systems may replace current indicators and controls. As a result of this evolutionary characteristic of the cockpit design process, there is frequently a reference cockpit design, which is usually a conventional aircraft that has been through the test of operational usage. If the new design represents an evolution, improvement attempt, or other deviation from this reference cockpit, the potential exists to make direct comparisons. Service experience should be researched to assure that any existing problems are understood and not perpetuated.

(iii) If preliminary analyses by the certification team identify potential problem areas, these areas should receive more extensive evaluation and data collection in order to verify compliance with § 27.1523. These concerns should be adequately addressed in the manufacturer’s demonstration plan when submitted to the FAA/AUTHORITY.

(iv) If the new design represents a significant change in level of automation or pilot duties, analytic comparison to a reference design may have lessened value. Without a firm data base on the time required to accomplish both

normally required and contingency duties, more complete and realistic simulation and flight testing will be required.

(3) Testing.

(i) In the case of the minimum crew determination, the final decision is reserved until the rotorcraft has been flown by experienced flight test pilots trained and current in the aircraft. More assurance is derived from actual flight tests than from earlier simulator tests or other synthetic or computer model procedures.

(ii) The test program should address the workload functions and factors listed below. For example, an evaluation of communications workload should include the basic workload required to properly operate the aircraft in the environment for which approval is sought. The goal is to evaluate workload with the proposed crew complement during realistic operating conditions, including representative air traffic and weather.

(A) Basic workload functions. The following basic workload functions are considered:

(1) Flight path control.

(2) Collision avoidance.

(3) Navigation.

(4) Communications.

(5) Operation and monitoring of aircraft engines and systems.

(6) Command decisions.

(B) Workload factors. The following workload factors are considered significant when analyzing and demonstrating workload for minimum flight crew determination:

(1) The accessibility, ease, and simplicity of operation of all necessary flight, power, and equipment controls, including emergency fuel shutoff valves, electrical controls, electronic controls, and engine controls.

(2) The accessibility and conspicuity of all necessary instruments and failure warning devices such as fire warning, electrical system malfunction, and other failure or caution indicators. The extent to which such instruments or devices direct the proper corrective action is also considered.

(3) The number, urgency, and complexity of operating procedures with particular consideration given to the specific fuel management schedule imposed by center of gravity, structural or other considerations of an airworthiness nature, and to the ability of each engine to operate at all times from a single tank or source which is automatically replenished if fuel is also stored in other tanks.

(4) The degree and duration of concentrated mental and physical effort involved in normal operation and in diagnosing and coping with malfunctions and emergencies.

(5) The extent of required monitoring of the fuel, hydraulic, electrical, electronic, deicing, and other systems while en route.

(6) The actions requiring a crewmember to be unavailable at his assigned duty station, including: observation of systems, emergency operation of any control, and emergencies in any compartment.

(7) The degree of automation provided in the aircraft systems to afford (after failures or malfunctions) automatic crossover or isolation of difficulties to minimize the need for any flight crew action to guard against loss of hydraulic or electric power to flight controls or to other essential systems.

(8) The communications and navigation workload.

(9) The possibility of increased workload associated with any emergency that may lead to other emergencies.

AC 27.1525. § 27.1525 (Amendment 27-21) KINDS OF OPERATION.

This rule states that the kinds of operation to which the rotorcraft is limited are established by demonstrated compliance with applicable certification requirements (primarily flight) and the equipment requirements established for that kind of operation. The basic flight characteristics requirements of Part 27 are suitable for day VFR approval. Additional night considerations appear in § 27.141(c) and in the operating rules. IFR requirements are addressed in § 27.141(c) and Appendix B to Part 27. Additional IFR equipment requirements are contained in the operating rules. External load requirements for certification may be found in §§ 27.25(c) and 27.865(c) in addition to Part 133. Related § 27.1583(d) further requires that the approved kinds of operation must be listed in the operating limitations section of the Rotorcraft Flight Manual. That equipment necessary to comply with applicable airworthiness requirements of Part 27 should also be listed in the limitations section of the flight manual.

AC 27.1527. § 27.1527 (Amendment 27-14) MAXIMUM OPERATING ALTITUDE.

a. Explanation. This rule requires that the maximum altitude for operation of the rotorcraft must be established as an operating limitation. The rule is intended to establish en route altitude as an operating limit. The requirements for maximum takeoff and landing altitude are contained in other portions of the rule. (See discussion in paragraph AC 27.143.) The en route limit may be established by any of the preceding subparts of the rule involving flight, structure, powerplant, equipment or related functional requirements of those subparts. Maximum operating altitude is ordinarily specified initially by the manufacturer and substantiated throughout the type certification program by each engineering discipline. Maximum operating altitude must be established in terms of pressure altitude unless the pilot is provided with some equally functional means of observing specified altitude limits (e.g., a density altitude indicator if maximum altitude is specified in terms of density altitude). A related requirement in § 27.1583 specifies that maximum operating altitude must be established as an operating limitation in the RFM and further that any limiting factors must be identified and explained.

b. Procedures. Each FAA/AUTHORITY engineering discipline must ensure that data and testing are adequate to properly substantiate and qualify all critical components to the maximum operating altitude of the rotorcraft. The design or maximum substantiated altitude should be specified in the Type Inspection Authorization. The flight test program must include at least one test flight to the maximum approved pressure altitude. This flight should include functional testing of all critical aircraft components. Although altitude extrapolation of performance and flying qualities test results may be allowed, an altitude limit higher than the maximum pressure altitude at which functional capability of critical aircraft systems has been demonstrated by flight test should not be approved.

AC 27.1529. § 27.1529 (Amendment 27-18) INSTRUCTIONS FOR CONTINUED AIRWORTHINESS (MAINTENANCE MANUAL).

a. **Airworthiness Limitations Section**

(1) Explanation. The FAA/AUTHORITY has long recognized the necessity to have a maintenance manual for rotorcraft due to the unique and generally complicated and critical design features.

(i) Amendment 27-3, in 1968, established the requirement for a specific airworthiness limitations section. Amendment 27-18, in 1980, revised the rule and added Appendix A containing requirements for preparation of instructions for continued airworthiness, including the airworthiness limitations section. The operating and maintenance rules require compliance with the airworthiness limitations section. The maintenance rules §§ 43.15 and 43.16 and § 91.163(c) of the operating rules also refer to or require compliance with certain parts of the instructions for continued airworthiness. The limitations were intended to “define the limits of this type certification

approval of the fatigue characteristics of critical flight structure." Refer to FAA Order 8620.2, Applicability and Enforcement of Manufacturer's Data, November 2, 1978, for further information.

(ii) Critical components must be identified by part number (or equivalent) and serial number (or equivalent). Section 27.1529(a)(1) and (2) of Amendment 27-3 and/or § 45.14 list the requirements. The part numbers of parts and/or components requiring inspections and/or replacement as a result of § 27.571 must be listed in the airworthiness limitations section of the manual or another separate, segregated section of the manual appropriate to the rules.

(iii) Rotorcraft type designs are unique in comparison to airplane designs in that transmissions and rotors and some elements of flight control systems have critical components that may be adversely affected by operating conditions and time in service. The FAA/AUTHORITY-approved airworthiness limitations section may include such items as gear sets, bearings, etc., of the rotorcraft type design if a finite life was established during the type certification program and/or if the FAA/AUTHORITY determined that mandatory inspections and/or replacement of the component (part) was necessary to maintain airworthiness of the rotorcraft. For example, a drive spline, gear, or bearing was serviceable after concluding the ground endurance test and/or FAA/AUTHORITY flight test program. However, an FAA/AUTHORITY-mandated inspection or replacement of the component was considered essential for airworthiness of the rotorcraft type design and necessary for type certification. Time between overhaul (TBO) of components is not part of the airworthiness limitations but is a recommendation from the manufacturer (See Part 27, Appendix A, A27.3(b)(1)). If an inspection or replacement of a part in an assembly is required, the inspection interval or replacement time and the part number should be included in the limitations. The inspection interval or replacement time may or may not coincide with the recommended overhaul interval of the assembly. (See the comments for Proposal 8-25, § XX.4 in the preamble of Amendment 27-20 (45 FR 60154), September 11, 1980). Note that parts considered unserviceable at the conclusion of the ground endurance test of § 27.923 are not acceptable for type certification.

(2) Procedures.

(i) General.

(A) The rule states that the manual must contain all information that the applicant considers essential for proper maintenance. Amendment 27-3 added the requirement for an airworthiness limitations section and Amendment 27-18 revised § 27.1529 and added Appendix A that contains the requirements for preparation of the manual. The airworthiness limitations section of the manual, and any revisions thereto, must be FAA/AUTHORITY approved. The manufacturer's recommendations for continued airworthiness are not FAA/AUTHORITY approved.

(B) The airworthiness limitations section contains information derived primarily but not solely from the data approved under § 27.571. In addition to replacement times and inspections, where appropriate, some of the basic usage assumptions made in the fatigue evaluation, which the operator can reliably assess (such as numbers of ground-air-ground cycles) should be identified. These should be noted in the airworthiness limitations so that the operator may take appropriate action (see MG 8 and MG 11). Approval of this section of the manual (draft form is acceptable) must be accomplished before type certification. See Part 27, Appendix A, paragraph A27.4 of Amendment 27-17. (For further information, see comments for Proposal 8-25, § XX.4, in the preamble of Amendment 27-18 (45 FR 60154, September 11, 1980).)

(C) Part 27, Appendix A, paragraphs A27.3(a) and (b) pertain to the content of the instructions for continued airworthiness. For example, scheduling and servicing information is included in this section of the manual.

(ii) Identifying and Serializing Fatigue Critical Components.

(A) Part numbers and serial numbers must be applied to fatigue critical components as noted in § 45.14 and § 27.1529(a)(1) and (2). Electric arc marking method should not be used due to possible internal arcing, pitting of surfaces, and changes in physical or chemical characteristics due to the local high temperature at the arcs.

(B) Vibrating pencils, name plates, or permanent inks may be used. However, serial numbers should be applied on each part such that material is upset or displaced on the part, thereby attaining a more permanent number. When material is upset or displaced, the component's integrity and fatigue tolerance must not be compromised, for example, the least critical or lowest stressed area should be used.

(C) For small parts, the rule (§ 45.14) allows markings that are equivalent to part and serial numbers. Markings or symbols may be used to enable the identification of a part as one for which a replacement time, inspection interval, or related procedure is specified in the airworthiness limitations section. The FAA/AUTHORITY-stated identification of such small parts is clearly essential for safety and may not be relieved. With adoption of Amendment 27-18, the marking requirements are contained in § 45.14, Amendment 45-12.

(iii) A draft copy of the manual should be available to the FAA/AUTHORITY for use during the F&R program if such a program is conducted under § 21.35(b). The content of the manual may be limited to the information necessary to maintain the aircraft during the F&R program. The manual must be completed and furnished with each aircraft receiving an airworthiness certificate, § 21.50(a) and (b).

(iv) Service experience may dictate additional and subsequent (to type certification) changes to the airworthiness limitations section. ADs may be used to revise the limitations. (The relationship between ADs and the process of changing the limitations is covered in the preamble of Amendment 27-4 (33 FR 14104; September 18, 1968.) Whenever the revised limitations are made restrictive for aircraft in service, the Administrative Procedures Act requires “notice and public procedure” to persons that may be affected and to satisfy the requirement for notification of the changes and identification of the correct issue of the airworthiness limitations, if appropriate. This procedure is also used for restrictive or reduced operation limitations in the RFM.

b. **How to Prepare Instructions for Continued Airworthiness**

(1) Explanation. The FAA/AUTHORITY recognized the need for Instructions for Continued Airworthiness to maintain the rotorcraft in an airworthy condition.

(i) Amendment 27-18, 45 FR 60177, September 11,1980, states the applicant must prepare Instructions for Continued Airworthiness, in accordance with Appendix A of this part, that are acceptable to the Administrator.

(ii) Section 21.50(b), Amendment 21-51, 45 FR 60170, September 11, 1980, requires the holder of a design approval to furnish at least one set of complete Instructions for Continued Airworthiness prepared in accordance with § 27.1529 of this chapter. The design approval can include either the type certificate or supplemental type certificate for an aircraft or aircraft engine for which application was made after January 28, 1981. The approved and accepted set of complete Instructions for Continued Airworthiness should be furnished upon delivery or upon issuance of the first standard airworthiness certificate for the affected aircraft, whichever occurs later.

(iii) The ICAs or ICA supplements are also required for PMAs, major design change, or alteration approvals that the existing ICAs do not adequately cover. In such instances, it is the responsibility of the PMA holder, or the person who receives the design change or alteration approval to produce the required ICAs and distribute them in accordance with the requirements of § 21.50(b). The acceptance for these ICAs or supplements should follow the procedure in Section b(2).

(2) Procedure

(i) General. When the rule requires Instructions for Continued Airworthiness for a rotorcraft, its rotors, and appliances, the applicant must prepare Instructions for Continued Airworthiness in accordance with Appendix A to FAR/JAR Part 27, that are acceptable to the FAA/AUTHORITY.

(ii) Guidance. The FAA/AUTHORITY has guidance material to assist an applicant in preparing Instructions for Continued Airworthiness for the type design change. AC 27-1B, Appendix A, provides a detailed template describing the

requirements, standard industry practices, and guidance for Instructions for Continued Airworthiness.

(iii) Preparation. The applicant must prepare Instructions for Continued Airworthiness that is applicable to the type of certification. The holder of a design approval for a type certificate normally will comply with all requirements specified in Appendix A to FAR/JAR Part 27. The holder of a design approval for a supplemental type certificate would only comply with requirements specified in Appendix A to FAR/JAR Part 27 that are applicable to their type design change.

(iv) Submittal. The applicant must submit to the FAA/AUTHORITY the applicant's Instructions for Continued Airworthiness, and any authorized publication referenced in the applicant's Instructions for Continued Airworthiness, i.e., FAA/AUTHORITY-accepted engine and appliance Instructions for Continued Airworthiness.

(v) Evaluation.

(A) The FAA/AUTHORITY will evaluate the applicant's Instructions for Continued Airworthiness to determine that they meet the requirements of FAR/JAR § 27.1529 and Appendix A to FAR/JAR Part 27.

(B) For a type certificate, the determination is made in two parts. The first is an FAA/AUTHORITY review, followed by FAA/AUTHORITY personnel conducting an Aircraft Maintainability Evaluation or equivalent, when requested to determine the acceptability of the Instructions for Continued Airworthiness. For a supplemental type certificate the determination is made by an FAA/AUTHORITY review, unless the supplemental type certificate affects multiple major appliances or systems; then the process for type certificate would be used.

(vi) Acceptance as per Authority procedures. For FAA, acceptance of the Instructions for Continued Airworthiness is indicated by a signed and dated acceptance statement on the List of Effective Pages in the Instructions for Continued Airworthiness.

AC 27.1529A. § 27.1529 (Amendment 27-23) INSTRUCTIONS FOR CONTINUED AIRWORTHINESS (MAINTENANCE MANUAL).

a. Explanation. Amendment 91-21, 54 FR 41211, October 5, 1989, recodified certain paragraphs in FAR Part 91. This revision corrects a reference from FAR § 91.163 to FAR § 91.403.

b. Procedures. Correct the references in paragraph AC 27.1529a(1) from §§ 43.15, 43.16, and 91.163(c) to §§ 43.15, 43.16, and 91.403 of the operating rules.

SUBPART G - OPERATING LIMITATIONS AND INFORMATION

MARKINGS AND PLACARDS

AC 27.1541. § 27.1541 MARKINGS AND PLACARDS - GENERAL. See paragraph AC 27.1543.

AC 27.1543. §§ 27.1541, 27.1543, 27.1545, AND 27.1549 (Amendment 27-16) INSTRUMENT MARKINGS.

a. Background and Explanation.

(1) Aircraft instruments have historically been marked in a variety of ways and with an interesting assortment of symbols. A limited number of regulatory requirements have been incorporated in Part 27, Subpart G, Markings and Placards, and these efforts have standardized some basic aspects of instrument marking for rotorcraft. As rotorcraft have become increasingly complex with an increased number of engines, OEI ratings, more sophisticated instrumentation, etc., the need for more specific standards has greatly increased.

(2) It is vitally important that instrument markings be standardized among rotorcraft. When markings are not standardized, considerable confusion and additional workload may be introduced into the cockpit environment. If markings are not standard, it is conceivable that a marking in one rotorcraft could mean the opposite of a similar marking in another rotorcraft. The results of such a situation could be troublesome when pilots fly several rotorcraft models.

(3) The following guidance is offered for the purpose of obtaining a general standardization of instrument markings. It is realized that there are a great many variations in instrument presentations for which all guidance may not apply. This is particularly true of new designs, such as cathode ray tube (CRT) displays currently being presented. It is of overriding importance that the philosophies included here be administered, even if specific guidance cannot be applied for particular designs. Instrument markings are provided to aid interpretation of instruments quickly and accurately. Good instrument markings should indicate operating conditions at a glance. The best markings are ordinarily the simplest markings.

(4) Advisory Circular 20-88A, dated 9/30/85, Guidelines on the Marking of Aircraft Powerplant Instruments (Displays), should be used in conjunction with this advisory material for rotorcraft.

b. Procedures.

(1) Limits. Each maximum allowable limit substantiated for safe operation must be marked with a red line. This marking should be a red radial line for circular gages. If

there is a minimum allowable limit for safe operation, this value should also be marked with a red radial line. The use of multiple red radial lines should be avoided except where their use is readily apparent to the flight crewmember. Normally, no more than one maximum and one minimum red radial line should be incorporated on any one instrument to minimize confusion and avoid potential flightcrew errors; however, use of multiple red radial lines may be permitted if such markings can be presented in an acceptable manner.

(2) Normal Operating Range. Each normal operating range should be marked with a green arc or green line which does not extend beyond the maximum and minimum values for continuous safe operation. Discontinuities in width have been used when normal ranges vary with other parameters. Integrating instruments in place of these markings should be encouraged although there may be no regulatory requirement for them.

(3) Cautionary Ranges. Time limited ranges, precautionary ranges, or ranges for which special operating procedures are required should be marked with a yellow arc or yellow line. If a yellow range is used to indicate a special operating procedure, information describing the special procedure should be included in the Rotorcraft Flight Manual.

(4) OEI Markings. OEI ratings represent a special challenge for retaining simplicity and clarity in powerplant instrument markings. OEI ratings are eligible to be used only during an extremely small portion of total flight time; therefore, they should not dominate the presentation or obscure other markings. They are needed only for reference. Indices for 2 ½-minute and 30-minute power may be marked above the takeoff power redline on engine power instruments. OEI reference markings should be clearly distinct from the normal all-engines-operating markings. One acceptable means of marking OEI limits has been narrow dashed radials with yellow for 30-minute and red for 2 ½-minute limits. OEI markings should be consistent between gages. For example, a 30-minute marking on an N_1 or torque gage should be similar in appearance to the 30-minute marking on the engine temperature gage.

(5) Red Arcs or Ranges. Sections 27.1549(d) and 27.1553 allow the use of red arcs. Experience has proven that when red arcs are used to indicate maximum or minimum values, the meaning of a red line loses its significance. Therefore, the use of red ranges or arcs to indicate limit values should be discouraged. Red is conventionally used to represent a limit (maximum or minimum) for which an aircraft or component has been substantiated. A “range” of limits for a given parameter is not consistent with the definition of the terms “limit,” “minimum,” or “maximum.” In addition, a red arc tends to imply that more than one value is limiting, that a scale is provided to show operation within a range of values, and that an absolute limit may not exist until the extreme of a red range is attained. These implications must be avoided wherever possible by specifying a single limiting value and marking it with a single red line (radial). If readings in excess of that value were indicated, it would then be obvious to the crew that a limit had been exceeded. A red arc may be used to indicate a transient vibration

range as indicated in § 27.1549(d); however, if the range is a cautionary range and not a prohibited range, use of a yellow arc is recommended. The fuel quantity indicator configuration described in § 27.1553 is considered a special application of red arcs. Occasionally a red arc has been utilized when limits vary with other parameters. Discontinuities in width could conceivably represent limits when other parameters are considered. The use of integrating instruments would alleviate much of the problem and should be encouraged although there may be no regulatory requirement for them.

(6) Flight Evaluation. In evaluating quantity indicator markings, the final criterion must be: "Are the markings adequate for correct interpretation by the crew?" FAA/AUTHORITY evaluations of quantity indicator markings should begin early in a certification program utilizing a cockpit or aircraft mock-up whenever possible. All required quantity indicators and quantity indicator markings must be readable from each pilot station. Depending on cockpit and window geometry, quantity indicators should be evaluated in direct sunlight unless they are located high on the panel underneath a substantial glare shield. Evaluation in direct sunlight is especially important for any displays using light bars or digital lighting segments, such as digital radar altimeter presentations or vertical scale instruments using light segments. Required quantity indicators must be readable without upper body movement or extensive head movement by the crew. Evaluators should be especially alert to any scale markings or range markings that are obscured by parallax, since these features are unacceptable. If the aircraft is to be approved for night operation, each required indicator must also be evaluated during night lighting conditions. The same visibility requirements apply for night. The evaluator should look particularly for lighting features that may change, mask, or obscure the colored instrument markings. For example, in one case, red indicator markings were totally obscured by red instrument lighting. The use of red lighting is satisfactory if the instrument markings are visible even though the color of the markings may be distorted. Except for minor changes, lighting should be evaluated in flight to correctly evaluate vibration effects and various background lighting conditions.

(7) Digital Instruments.

(i) For purposes of this discussion, the two types of digital indicators considered are an indicator which consists of a column of light segments which illuminate sequentially to display changing values, and an indicator which consists of horizontal and vertical line segments in the configuration of a block "8" to display numerical values. Both indicator types work well for parameters where trend information is generally not needed such as engine oil pressure or temperature. However, for rapidly changing parameters such as engine exhaust gas temperature, torque, or RPM, trend information may not be attainable. Advisory Circular 20-88A specifies that instrument markings are intended to provide necessary information at a glance. Trend information for power indicators is vitally important for safe operation of a rotorcraft, and this information must be obtainable at a glance. For the columnar light segments, the ability to detect quickly trend information is largely a function of the resolution provided by single segments (e.g., if there are two segments for each percent RPM, the ability to detect trend information is better than if there is only one segment for

each percent RPM). For digital indicators displaying numerical values, trend information may be unattainable because rapidly changing parameters produce a blur, and this design may be unsuitable as a single source of information. The evaluator should use a great deal of caution to ensure adequate trend information is available in primary power and rotor indicators of digital design.

(ii) Another area of concern in digital and moving tape instruments is the ability to determine when limits are being approached. Color code markings are frequently incorporated on the moving face of a tape or digital presentation. In such cases, it is mandatory that limit markings be affixed adjacent to the presentation, or that another means be provided so that the pilot can anticipate approaching a limit. The beginning and end of normal and cautionary ranges should be marked adjacent to the display. The entire range need not be color coded adjacent to the display if the colors are integral on the face of the tape or in the individual digital segments. Marking of limit values solely on the tape or in the colored light segments alone is unsatisfactory. Marking of digital indicators displaying numerical values is adequately addressed in AC 20-88A, paragraph 3.

(iii) Appropriate failure modes should be evaluated during the system analysis. This will ordinarily include portions of the digital display. Such failures should be detectable whenever they affect reading accuracy. As a result of this analysis, the system may incorporate a test feature that ensures all digital segments operate satisfactorily. This feature should be encouraged.

(8) Additional Markings. To keep markings standardized and uncomplicated, only the FAA/AUTHORITY-approved ranges and limits should be included. Items such as manufacturer's recommended values or manufacturer's warranty information are inappropriate for instrument markings and should not be included. Such information may be presented elsewhere. Transient limits may be indicated by a small red index such as a dot or triangle. Information defining allowable conditions for each transient index should be in the Rotorcraft Flight Manual (e.g., maximum for starting - 12 seconds).

(9) Airspeed Indicator. While the foregoing information is generally applicable to airspeed indicators, some particular features warrant additional attention.

(i) A red cross-hatched radial line should be located at power-off V_{NE} if that value is less than power-on V_{NE}.

(ii) Many rotorcraft have erratic, unreliable, or nonrepeatable airspeed indications at low speed which warrant caution when operating in that speed range. In such cases, a yellow arc on the instrument with an appropriate flight manual explanation has been found acceptable.

(iii) Indicated airspeed values should be utilized for all airspeed indicator markings.

(iv) Airspeed “bugs” may be used to highlight important takeoff, landing, or limit speeds. This concept may generally be encouraged; however, there are a maximum number of “bugs” that can be utilized without confusion for any given indicator. Typically, two “bugs” are acceptable and three or more are questionable. “Bugs” may also be used on a variety of instruments other than the airspeed indicator.

(10) Reference Material. Additional procedures for marking powerplant instruments are contained in Advisory Circular 20-88A. Where differences for rotorcraft exist between AC 20-88A and this AC, the more recently dated guidance should be utilized.

AC 27.1545. § 27.1545 (Amendment 27-16) AIRSPEED INDICATOR. See paragraph AC 27.1543.

AC 27.1547. § 27.1547 (Amendment 27-13) MAGNETIC DIRECTION INDICATOR.

a. Explanation. This section identifies the requirement and location for a calibration placard for the magnetic direction indicator.

b. Procedures. One means of accomplishing the requirements of this regulation is commonly known as swinging the compass. A surveyed compass rose is laid out on an appropriate surface. The compass rose location should be free from the influence of steel structures, underground pipes and cables, reinforced concrete, and other aircraft. The aircraft should be in an attitude that permits an accurate result. Normally the engines are in operation; however, if the aircraft is equipped with an auxiliary power unit which can supply electrical power for all electrical/electronic equipment or systems, this can be used instead of engine driven generators. Turn the aircraft on successive headings through 360°. It is recommended that the increments be every 30°; however, the increments should not exceed 45°. Prepare a placard to show the correction to be applied at each of the selected headings. When deviations of more than 10° are introduced by operation of any electrical/electronic equipment or systems, the placard should also be marked at each calibration heading showing the correction to be applied when such equipment or systems are turned on or energized. The placard resulting from this calibration should be installed on or near the magnetic direction indicator and identify which electrical loads, or combination of loads, are the cause of the excessive deviations.

AC 27.1549. § 27.1549 (Amendment 27-23) POWERPLANT MARKINGS.

a. Explanation. Amendment 27-23 adds the requirement of marking each OEI limit and operating range. The limits should be clearly differentiated from other limits and ranges marked on the instrument. Refer to AC 20-88A, Instrument Markings.

b. Procedures. The method of compliance is unchanged.

AC 27.1549A § 27.1549 (Amendment 27-29) POWERPLANT MARKINGS.

a. Explanation. Amendment 27-29 introduces the optional ratings of 30-second/2-minute OEI. Paragraph 27.1549(e) has been revised to show that the limits for the 30-second OEI rating are not required to be marked. Use of the 30-second OEI rating is limited to critical phases of operation after a failure or precautionary shutdown of an engine. During this critical stage of operation the crew should not be required to monitor engine instruments to avoid exceedances. Automatic control of the 30-second OEI limits are required by § 27.1143(e) and therefore the 30-second OEI limits are not required to be marked.

b. Procedures. The method of compliance is unchanged except the marking of 30-second OEI limits are unnecessary.

AC 27.1551. § 27.1551 OIL QUANTITY INDICATORS.

a. Background. This section states that each oil quantity indicator must be marked with enough increments to indicate readily and accurately the quantity of oil.

b. Procedures. There are several different ways in which the oil quantity indicator may be presented. Some of the ones more prevalent in the industry are:

(1) Oil quantity indicator. (Generally used when large amounts of reserve oil are required.)

(2) Oil quantity dip stick. (Most common method of measuring engine oil.)

(3) Oil quantity sight indicator. (Generally used for measuring transmission and gearbox oil quantities.)

c. No matter what method of oil quantity indicator is used, the indicator should be marked so that the oil quantity can be accurately determined. This can range from increments marked in gallons, such as oil quantity indicators for large amounts of oil, to oil quantity indicators marked in quarts with full and add marks, such as engine dip sticks. Sight indicators with full and add marks have been used successfully for gearboxes. Sight indicators normally do not reflect quantities. These are some of the methods currently in use to indicate the oil quantity. In all cases, those methods identified above have proved to be acceptable methods of showing compliance with the § 27.1551.

AC 27.1553. § 27.1553 FUEL QUANTITY INDICATOR.

a. Explanation. This section describes the markings necessary to identify the portion of unusable fuel that cannot be used in level flight. Unusable fuel may be present in a design due to the relative configuration of the fuel tank to the fuel tank outlet (e.g., sumps, unusual elevations and/or configurations dictated by aircraft

contours, etc.). If the unusable fuel supply for any tank is less than or equal to 1 gallon or is less than or equal to 5 percent of the tank capacity, whichever is greater, this section does not apply.

b. Procedures. For each fuel tank which has an unusable fuel capacity exceeding 1 gallon or 5 percent of the tank capacity, whichever is greater, the following should be accomplished.

(1) Calibration computations, measurements, and/or tests should determine the zero (empty) position on the fuel quantity indicator. (reference § 27.1337).

(2) The lowest reading obtainable in level flight must be determined by computation, measurement, and/or testing.

(3) Once the instrument readings defined by paragraphs b(1) and (2) above have been determined, a red arc should be placed between the readings on the fuel quantity indicator.

(4) Appropriate notations should be made in the flight manual to define the intent of the red arc to the flightcrew (reference § 27.1585(e)).

AC 27.1555. § 27.1555 (Amendment 27-21) CONTROL MARKINGS.

a. Explanation. Section 27.1301(b) requires that all installed equipment be labeled to identify its function and operations; however, this section provides more detailed requirements for control markings. Specific criteria are given for powerplant fuel controls, fuel quantity markings, and landing gear controls. The requirement to color emergency controls red is in this section.

b. Procedures.

(1) Section 27.1555(a) requires each cockpit control, other than flight controls whose function is not obvious, to be appropriately labeled. The primary flight controls are the cyclic, collective, and the directional control (tail rotor) pedals. For the control to be appropriately labeled, the rule requires that there should be an obvious and clear demarcation of the function and operation of the control. When performing the evaluation to determine the adequacy of markings, remember that only those controls which are quite traditional should be judged to be obvious in their operation. An example of this has been the navigation/communication (NAV/COMM) control heads. The more traditional control units had concentric knobs of decreasing size for the selection of frequency. Because this system was so common for such a period of time, the finding was generally made that the function of this control was obvious and thus did not require a specific marking. However, as more current technology digital electronic controls were used, the frequency selectors were judged not to be obvious in their operation, and their function and operation were required to be labeled.

(2) Review design data and available hardware to ensure the powerplant fuel controls are clearly and permanently marked such that:

(i) Selector valve control clearly shows each position for each tank and each crossfeed configuration.

(ii) Tank selection sequences required for safe operation are clearly and permanently marked on or adjacent to the required selector.

(iii) Each control valve is clearly marked to show the position of the controls for each engine on multiengine rotorcraft.

(3) Review design data and available hardware to ensure that usable fuel capacity is clearly marked as follows:

(i) If the fuel system has no selector controls, usable fuel capacity must be shown on the fuel quantity indicator (reference paragraph AC 27.1553).

(ii) If the system has selector controls, the usable fuel capacity at each selector position must be clearly shown near the selector position.

(4) Markings of essential visual position indicators must be obvious and within view of required crewmembers. Landing gear markings normally include indications for down, intermediate/unsafe, and up. Accepted symbology has included arrows for up/down indications, crosshatching of intermediate/unsafe, various combinations of colored lights, and combinations of all of the above. Cockpit presentation is further discussed in paragraph AC 27.729. Emergency controls which should be marked in red include those used for firewall/emergency fuel shutoff, landing gear blowdown/emergency release, fire extinguishers, float activation, cargo hook release and fuel dump. The method of operation of emergency controls must be clearly marked. In the case of switches and buttons, the method of operation is often inherently obvious without dedicated labeling.

(5) The two most obvious means of displaying landing gear operating speed are use of a placard or an appropriate mark in the airspeed indicator.

AC 27.1557. <u>§ 27.1557 (Amendment 27-11) MISCELLANEOUS MARKINGS AND PLACARDS</u>.

a. <u>Explanation</u>. Placards or equivalent markings that are conspicuous and durable are required to identify design/operational limits or information for certain seats, baggage/cargo compartments, ballast, fuel and oil tanks, and emergency exits. The color red is specified for exit placards.

(1) Baggage, cargo and ballast markings must state the allowable maximum weight and the distributed (floor) loading, where appropriate. The markings should prevent overloading the compartment and its floor or the ballast installation.

(2) Seats must be permanently marked as prescribed with the design allowable occupant weight if the seat is designed for less than a 170-pound occupant. The placard specified here is not related to a rotorcraft operating weight or loading limitation.

(3) Fuel and oil tank filler openings must be marked as prescribed to provide essential information for proper fluids and to provide limitation data for pressures in refueling/defueling systems if installed.

(4) Emergency exit placards or markings, inside and outside, shall be red (red with white background for visibility or reversed colors). Locating signs and operating signs or placards are required. See paragraph AC 27.783 (§ 27.783) for door marking requirements.

(5) Markings must be conspicuous and durable as prescribed in § 27.1541(b).

b. Procedures.

(1) The type design drawings such as general “markings” drawing should be reviewed for compliance. During an interior/exterior compliance inspection, usually conducted prior to issuing the TIA, compliance with the standard should be confirmed or ensured. If an FAA/AUTHORITY conducted F&R program is prescribed, complete “production” aircraft markings should be installed prior to beginning the program. As a continuation of the FAA/AUTHORITY evaluation, the markings shall be checked during the F&R program. Contrasting colors are essential. Various paint schemes should be checked for compliance.

(2) Allowable maximum weight and floor distributed loading and possibly baggage tiedown and security instructions are generally included in the cargo compartment markings. A placard, stencil, or equivalent that is conspicuous and durable may be placed on the compartment door, wall, etc.

(3) For fuel and oil filler markings, contrasting colors between letters and background are essential. The visibility of the markings should not be affected by changing paint schemes or colors. This may be accomplished by decals having a contrasting background. Stencil markings should be discouraged for fuel and oil markings.

(4) Emergency exit marking performance standards are also contained in paragraph AC 27.807. It is recommended that the exit locating sign (interior) be readable from the farthest seat in the cabin and that the identification of the operating handle or device and the operating instructions be readable from a distance of 30 inches. It is further recommended that external exit instructions or markings have

contrasting colors that comply with § 29.811 and have at least 30 percent difference in reflectance. Advisory Circular 20-47, Exterior Colored Band Around Exits on Transport Airplanes, provides information about measuring reflectance of colors. The standard concerns a qualitative or objective standard, however.

(5) Advisory Circular 20-116, Marking Aircraft Fuel Filler Openings with Color-Coded Decals, concerns color-coded decals for fuel filler openings. These decals generally supplement the markings required by the certification standards.

AC 27.1559. § 27.1559 (Amendment 27-21) LIMITATIONS PLACARD.

a. Explanation.

(1) The content of and information on the placard has been changed significantly as a result of associated and complementary changes in the airworthiness standards and the maintenance and operating rules. Regardless of content, the placard must be in clear view of the pilot (or pilots).

(2) By adoption of FAR Part 27 in 1965, the standard and its predecessor CAR Part 6, required compliance with the operating limitations in the approved Rotorcraft Flight Manual.

(3) In conjunction with the adoption of an Airworthiness Limitations Section for the maintenance manual as stated in § 27.1529 of Amendment 27-3, the content of the placard was changed significantly to require compliance with the requirements in that section. The maintenance rule (§ 43.16) was also adopted in 1968.

(4) Amendment 27-8 adopted standards to allow use of a combination of manual material, markings, and placards rather than mandate a Rotorcraft Flight Manual. The requirement for the placard content was revised accordingly.

(5) Amendment 27-18, issued in 1980, adopted standards requiring “Instructions for Continued Airworthiness” (maintenance manual). This manual may include an Airworthiness Limitations Section, which is a segregated and approved part of the manual. The maintenance and operating rules, §§ 43.15, 43.16, 91.163(c) and other operating rules require compliance with the Airworthiness Limitations Section. Similarly, other airworthiness standards were adopted for airplanes, engines, and propellers to require Instructions for Continued Airworthiness and an Airworthiness Limitations Section. See paragraph AC 27.1529 for further information.

(6) Amendment 27-21 adopted a significant change for the placard. The placard must be in clear view of the pilot and must provide a convenient cockpit presentation of the approved types of operation for each aircraft. Other operating and maintenance rules referenced in the previous paragraph provided the basis for much of this reduction in the placard content.

b. Procedures.

(1) The placard must specify the kinds of operations, such as VFR, IFR, day, night, or icing for which the rotorcraft is equipped and approved.

(2) A placard (or durable decal) must be legible to the pilot and located in clear view of the pilot. If two pilots are required, a single placard may satisfy the standard. This aspect will be evaluated by a test pilot. The TIR should contain a compliance check entry for this section.

(3) The placard content for older rotorcraft designs is directly related to the rotorcraft certification basis. If the rotorcraft type design has an “FAA/AUTHORITY approved” and segregated Airworthiness Limitations Section of the maintenance manual, the limitations placard may be revised to comply with the new standard. The certification basis should be changed in conjunction with the placard change.

AC 27.1561. § 27.1561 SAFETY EQUIPMENT.

a. Explanation. This standard requires identification or location markings for each item of safety equipment and operating information for crew-operated controls.

b. Procedures.

(1) Release devices, such as levers or latch handles for liferafts and other safety equipment, should be plainly marked. The method of operation should be marked also. Stencils, permanent decals, placards, or other permanent labels or instructions may be used.

(2) Lockers, compartments, or pouches used to house safety equipment, such as life vests, should be marked to identify the equipment therein and to also identify, if not obvious, the method or means of getting to or releasing the equipment.

(3) Safety equipment labels and instructions should be used. Section 27.1555(d)(2) concerns emergency control markings. White letters and red background (or reverse) should be used.

(4) Locating signs for equipment should be legible in daylight from the furthest-seated point in the cabin or should be recognizable from a distance equal to the width of the cabin. Letters, 1 inch high, should be acceptable to satisfy the recommendation. Operating instructions should be legible from a distance of 30 inches. These are recommendations based on exit standards of § 29.811(b) and (e)(1).

(5) Easily recognized or identified and easily accessible safety equipment located in view of the occupants may not require locating signs, stencils, or decals. Passenger compartment fire extinguisher in view of the passengers is an example.

AC 27.1565. §27. 1565 (Amendment 27-2) TAIL ROTOR.

a. Explanation.

(1) This standard concerns tail rotor disc visibility in normal daylight ground conditions. Amendment 27-2 added “daylight” to the standard. A personnel guard is not required. The tail rotor shall be marked to achieve a conspicuous disc whenever the blades are rotating.

(2) Completely shrouded or protected blades may not require contrasting color segments if the shroud provides equivalent protection for personnel on the ground. A simple tubular guard does not alleviate this standard.

b. Procedures.

(1) Each tail rotor blade shall be marked with contrasting colors.

(2) During FAA/AUTHORITY compliance inspections or during the flight test program, the tail rotor will be evaluated, qualitatively, in daylight for a conspicuous disc.

(3) As an aid to select proper colors for conspicuousness, see AC 20-47, Exterior Colored Band around Exits on Transport Airplanes. This AC concerns, in part, methods for measuring reflectance (3:1 factor) and contrast colors for transport aircraft. Section 29.811(b)(2) requires contrast colors for transport rotorcraft. This AC also contains suggestions for chromatic contrast. A 3:1 reflectance factor between rotor blade segment colors is acceptable. It is recommended that a few combinations of colors be approved to provide a selection of color combinations. The type design drawings will include the necessary information and data for design control.

SUBPART G - OPERATING LIMITATIONS AND INFORMATION

ROTORCRAFT FLIGHT MANUAL

AC 27.1581. § 27.1581 (Amendment 27-14) ROTORCRAFT FLIGHT MANUAL GENERAL.

a. Explanation.

(1) The primary purpose of the Rotorcraft Flight Manual (RFM) is to provide an authoritative source of information considered to be necessary for or likely to promote safe operation of the rotorcraft.

(2) Since the flightcrew is most directly concerned with operation of the rotorcraft, the language and presentation of the flight manual shall be directed principally to the needs and convenience of the flightcrew but should not ignore the needs of other contributors to safe operation. As used with respect to the RFM, safe operation is construed to include, but not be limited to, operation of the rotorcraft in the manner that is mandatory for, or recommended for, compliance with applicable airworthiness requirements and with the particular provisions of the operating regulations relating to the rotorcraft's approved performance capabilities.

(3) To serve its intended purpose, therefore, the RFM must include the certificate limitations established for the design as a consequence to the type certification evaluation, the performance information necessary to establish the operating limitations imposed through application to the operating regulations (FAR Parts 91, 127, and 135), and the procedures and other information necessary to enable the flightcrew to safely operate the rotorcraft within the envelope of limitations thus delineated. The outline presented in this circular is directed toward those objectives.

(4) Information and data that are mandatory for an acceptable RFM are prescribed in §§ 27.1581 through 27.1589, and nothing contained in these sections should be construed as amending those requirements. Certain additional elements of flight manuals, however, have been shown by experience to be practical necessities if the document is to serve effectively its intended purpose.

b. Procedures.

(1) The following criteria do not affect the status of RFMs which are presently approved. When such manuals are amended in the future, however, it is recommended that the concepts of this section be incorporated wherever uniformity or clarity will result.

(2) Only the material required by FAR Part 27, or that considered necessary to implement the operating regulation, should be included in the portion of the manual that

is approved by the FAA/AUTHORITY. However, the manufacturer or operator may include other “unapproved” data in a separate and distinctively identified portion within the same document.

The RFM is considered necessary for safe operation of the rotorcraft and care should therefore be taken to produce a manual that is consistent with the need for completeness and clarity of the required information. Also, since the RFM is necessary for operation of the rotorcraft in accordance with the certificate limitations, it is considered to be public information.

(3) The page size for the RFM will be left to the discretion of the manufacturer. In this regard, operational compliance with § 91.31 should be considered. A cover should be provided and should indicate the nature of the contents by means of the title, “Rotorcraft Flight Manual.” Each page of the approved portion should bear the notation “FAA/AUTHORITY approved,” an indication of the approval sequence of that particular page (e.g., a date of approval, a revision number suitably supported by an amendment log which contains the appropriate date, etc.) the rotorcraft model number as it appears on the type data sheet, and any appropriate document identification number. Pages of the unapproved portion of the flight manual would use the issue date in lieu of the FAA/AUTHORITY-approved date. The material should be bound in semi-permanent fashion so that the pages will be protected and retained in proper sequence. In selecting the form of binding, consideration should be given to the necessity for amendment and the ease with which amendments can be accomplished.

(4) Amendments may take the form of revisions or supplements.

(i) A revision is a change to the RFM or its supplement made by the holder of the type certificate (TC) or supplemental type certificate (STC) involved.

(ii) A supplement is an addition to the RFM. If the rotorcraft manufacturer (holder of the TC) adds optional equipment or specific operations (such as Category “A” vertical operation or IFR operations), then the rotorcraft manufacturer is responsible for preparing any necessary RFM supplement. If someone other than the rotorcraft manufacturer applies for an STC to install equipment or modify the rotorcraft such that an RFM supplement is necessary, then the person who applies for the STC is responsible for the preparation of the RFM supplement.

(5) “Revision” may be incorporated by inserting new pages which embody the amended text and, where applicable, by removing superseded pages. A vertical amendment bar or data processing symbol should be inserted in the outer margin, where practicable, to indicate those parts of the text that have been changed. Each amended page should be identified in the same manner as pages of the basic manual and, in addition, should carry the assigned revision number and the FAA/AUTHORITY-approved revision date.

(6) Supplements are incorporated in the manual by inserting the applicable pages that contain the information associated with the particular change. Each supplemental page should also identify the rotorcraft type and model flight manual for which the supplement was issued, the name of the issuer, and the FAA/AUTHORITY approval date. The following statement is an example of a note which would be included on the title page of a flight manual supplement: "For rotorcraft approved to operate in accordance with the provisions of this rotorcraft flight manual supplement, the information contained herein supplements the information of the basic flight manual. For limitations, procedures, and performance data not contained in this supplement, consult the basic flight manual."

(7) Supplements should contain as much of the flight manual contents outlined below as considered appropriate for the particular change in type design, including title page and index of contents. It is suggested that these be prepared with a view to insertion in the FAA/AUTHORITY-approved portion of the flight manual as a complete and self-contained unit.

(8) The RFM should contain as much of the information required in Part 27 as is applicable to the individual type and model. For the purpose of standardization, it is recommended that the sequence of sections and of items within sections follow the format presented at the end of this paragraph if practicable.

(9) The following information would normally be included in the introduction section of the flight manual.

(i) Title Page. This page should include the manufacturer's name and address and the rotorcraft model number as it appears on the type certificate data sheet. If desired, include a trade name or trade model number in quotes, provisions for rotorcraft serial number and registration number, approval date of the basic document, and title and signature of the FAA/AUTHORITY approving official.

(ii) Table of Contents. An index should be located at the front of each section or at the front part of the manual.

(iii) Amendment Log. This log should be in the form of a table with provisions to record each amendment, an identifying number, title or description, the page numbers involved, the issue date, the identification of the FAA/AUTHORITY approving official, and the FAA/AUTHORITY approval date.

(iv) Separate amendment logs should be provided for each type of amendment issued; i.e., Log of Revisions, Log of Supplements, etc. Amendments issued by other than the holder of the basic type certificate should include a separate amendment log, which in addition to the issue date, should also identify the issuer and the STC number or other approval basis for the associated modification.

(v) List of Current Pages. This table should list, for each approved page of the manual, the issue date and any other appropriate identification necessary to establish that the manual is complete and current.

(10) The following flight manual format would be acceptable. The format recommends a sequence of sections and suggests items that would be included in those sections.

FLIGHT MANUAL FORMAT

INTRODUCTION

PART I, FAA/AUTHORITY APPROVED

Section 1 Limitations

Section 2 Normal Procedures

Section 3 Emergency Malfunction Procedures

Section 4 Performance Data

Section 5 Optional Equipment Supplements

PART II, MANUFACTURER'S DATA

Section 6 Weight and Balance

Section 7 Systems Description

Section 8 Handling, Servicing, and Maintenance

Section 9 Supplemental Performance Information

INTRODUCTION: This section would include any signature pages, list of approved pages, the log of revisions, and any additional introductory information desired. For each section, it is suggested that the following major titles be utilized and that the recommended information listed under each title be incorporated. Each section should include a table of contents and a list of figures applicable to that particular section.

Section 1 - Limitations:

a. Kinds of Operation.

Under this heading, the certification basis, crew requirements, VFR and/or IFR flight authorizations, and any operational restrictions would be presented.

b. Flight Limitations.

This section would include limitations with respect to airspeed, altitude, ambient temperatures, wind, slope, prohibited maneuvers, and any other flight limitations associated with a particular rotorcraft.

c. Weight Limitations.

This section would contain all gross weight, center of gravity (both longitudinal and lateral) limitations, and any other weight limitations unique to the rotorcraft (i.e., crew, passenger and/or cargo loadings).

d. Powerplant Limitations.

This section would include the temperature and pressure limits associated with powerplant operation (i.e., torque, RPM, TOT, etc.). This section would also include approved fuels and oils and their temperature and pressure limits. Any accessories attached to the powerplant (i.e., starters, generators, etc.), to which limitations in starting or operation are applicable, would be included herein.

e. Rotor Limitations.

This would include the power-on and power-off RPM limits, the effect of altitude on these parameters, and any other limitations associated with the rotor system(s).

f. Drive System Limitations.

This section would include all limitations associated with the drive system (i.e., main transmission, any adapter gearboxes, tail rotor gearbox, and any other drive system component applicable to a particular rotorcraft).

g. System Limitations.

This section would include any particular system limitations unique to the rotorcraft (i.e., battery limitations, hydraulic system limitations) and any limitations associated with the various types of stability augmentation and/or automatic flight control systems.

h. Instrument Markings.

All instrument markings would appear in this section. The significance of each limitation and of the color coding would be explained in this paragraph.

i. Placards.

The exact wording and general location of all placards would appear in this section.

Section 2 - Normal Procedures:

a. Preflight Checks.

This paragraph would include any exterior, interior, and any system checks prior to starting the engine(s).

b. Engine Start.

This paragraph would include any procedures associated with the engine start.

c. System Checks.

This paragraph would include any system check procedures such as hydraulic, stability augmentation, electrical, flight control, etc., which should be accomplished prior to takeoff.

d. Takeoff.

This paragraph would include any procedures associated with the takeoff and any procedures unique or applicable to the takeoff profile.

e. Cruise and/or Level Flight.

This paragraph would include any procedures applicable to cruise and/or level flight operation.

f. Approach and Landing.

This paragraph would include any procedures required or recommended for the approach and landing operation of the rotorcraft.

g. Engine/Rotor Shutdown.

This paragraph would include any procedures applicable to the engine and/or rotor shutdown and any procedures applicable upon completion of the rotorcraft operation.

h. Miscellaneous Procedures.

This section would include procedures for miscellaneous systems or conditions, such as bleed air heater, anti-ice systems, cold weather operations, etc.

Section 3 - Emergency and Malfunction Procedures:

a. Introduction.

This paragraph would include any introductory type information (i.e., definitions of terms used and any other information the manufacturer deemed appropriate).

b. Powerplant Failures.

This paragraph would include any information relative to engine, fuel control, or any other powerplant related emergency or malfunction.

c. Drive System Failures.

This paragraph would include recommendations and procedures relative to any drive system failure and/or malfunction.

d. System Failures.

This paragraph would include procedures and recommendations relative to any system failure and/or malfunction (i.e., electrical, hydraulic, and augmented flight control systems).

e. Fire.

This paragraph would include procedures to be followed in the event that engine, cabin, baggage compartment fire or smoke is detected.

f. Emergency Egress.

This paragraph would include emergency evacuation procedures for both the flightcrew and the passengers.

Section 4 - Performance Data:

a. Power Assurance.

This section would include all information relative to the power assurance checks.

b. Hover Information.

This paragraph would include all information relative to hover performance (i.e., hover ceiling IGE and OGE for single and/or multiengine operation). Any relative wind effects may also be included.

c. Height Velocity, Climbs, and Descents.

This paragraph would contain information relative to the HV curves, normal climbs, autorotation speeds, and any other data applicable to the particular rotorcraft.

d. Airspeed Calibration.

This paragraph would include the airspeed calibrations for the particular rotorcraft.

Section 5 - Optional Equipment Supplements:

This section would include all optional equipment supplements. These supplements may modify any of the limitations, procedures (both normal and emergency), and performance characteristics of the basic rotorcraft.

PART II, Manufacturer's Data (Not FAA/AUTHORITY Approved)

Section 6 - Weight and Balance:

All supplemental weight and balance information such as crew tables, passenger tables, fuel and oil tables, cargo tables, and any other loading tables applicable to the particular rotorcraft would appear in this section.

Section 7 - Systems Description:

This section would include all information relative to the various rotorcraft systems that the manufacturer believes would apply to the particular rotorcraft.

Section 8 - Handling, Servicing, and Maintenance:

This section would include all information relative to the handling, servicing, and maintenance that the manufacturer would care to present. This section would also include dimensions (i.e., baggage areas, doors, and any internal, external information appropriate to the rotorcraft).

Section 9 - Supplemental Performance Information:

This section would include any supplemental performance information the manufacturer would wish to provide. This section would also contain the cruise-range information associated with IFR operation.

AC 27.1583. <u>§27.1583 (Amendment 27-16) OPERATING LIMITATIONS</u>.

a. <u>Explanation</u>. The purpose of this section is to present the limitations applicable to the rotorcraft type and model as established in the course of the type certification

process. The limitations should be presented with explanation when approved. To the maximum practicable extent, the limitations should be presented in “operations” language and format. Since operation of the rotorcraft in accordance with such limitations is required by the operating regulations, the following should be inserted as a note at the beginning of this section: “Operation in compliance with the limitations presented in this section is required by the Federal Aviation Regulations.”
Section 27.1583 merely states that certain information must be given. The specific information is found during the showing of compliance with other paragraphs in the regulation.

b. Procedures.

(1) Section 27.1545 gives the markings required for the airspeed indicator.

(2) Rotor limits are established during compliance with § 27.33. The method of marking is specified in § 27.1549.

(3) Powerplant limits are discussed under § 27.1549.

(4) Weight limitations are specified in § 27.25. In the operating limitations section, there should be a statement of the maximum and minimum certificated takeoff and landing weights.

(5) Center of gravity limits are determined in accordance with § 27.27. Detailed center of gravity limitations information may either be presented in the limitations section of the flight manual or presented as a statement in limitations section which references charts or page numbers in the performance section. If landing gear position can measurably affect allowable CG, this information should be presented together with the moment change due to gear retraction.

(6) The minimum flightcrew is determined under § 27.1523 and is dependent upon the kinds of operation authorized. The established number and identity, by crew position of the minimum flightcrew, must be listed.

(7) Kinds of operations are established under § 27.1525. This section should contain the following preamble: “This rotorcraft is certified in the normal category (A and/or B) and is eligible for the following kinds of operation when the appropriate instruments and equipment required by the airworthiness and/or operating rules are installed and approved and are in operable condition.” Those of the following, and any others that are applicable, should be listed.

(i) Day and night VFR.

(ii) Approved to operate in known icing conditions.

(iii) IFR.

(iv) Extended overwater operations (ditching).

(v) External load operation.

(8) Limiting heights and speeds are determined under § 27.79 and are presented in the form of a height versus velocity diagram in the performance information section.

(9) Often other limitations are included in the limitations section that are not specifically mentioned in the rules but which are necessary for safe operation. Examples are:

(i) Altitude limits.

(ii) Ambient temperature limits.

(iii) Conditions for use of rotor brake.

(iv) Prohibitions against prolonged hover in cross or tail winds to prevent accumulation of noxious fumes in cockpit or cabin.

(v) Prohibitions against acrobatic maneuvers.

(vi) Required placards including text and location.

(vii) Special airworthiness equipment installations such as engine out or low rotor RPM warning systems.

AC 27.1585. § 27.1585 (Amendment 27-16) OPERATING PROCEDURES.

a. Explanation. The procedures sections of the manual should contain essential information peculiar to the particular type or model, the knowledge of which may be expected to enhance safety in the kinds of operations for which the type or model is approved. Information or procedures not directly related to airworthiness, or not under control of the crew, should not be included, nor should any procedure which is accepted as basic airmanship.

(1) Procedures information should be presented with respect to normal and emergency procedures. Alternatively, information outside the category of normal procedures may be subdivided into categories described as “abnormal” procedures and “emergency” procedures, as described herein.

(2) Notes, cautions, and warnings may be used to emphasize specific instructions or information in general accord with the following.

(i) "Note" should be used with respect to matters not directly related to safety but which are particularly important (e.g., Note: For normal twin-engine operation, maximum permissible torque needle split is 4 percent total).

(ii) "Caution" should be used with respect to safety matters of a secondary order not immediately imminent (e.g., Caution: On engine restart reduce ITT to 750° C on the operating engine).

(iii) "Warning" should be used with respect to safety matters of a primary order or immediately imminent (e.g., Warning: Do not allow rotor RPM to drop below minimum limits).

(3) The operating procedures of this section have been developed with specific regard for the design features and operating characteristics of the rotorcraft and have been approved by FAA/AUTHORITY for guidance in identifying acceptable procedures for safe operation. Observance of these procedures is not mandatory, and FAA/AUTHORITY approval of such procedures is not intended to prohibit or discourage development and use of improved or equivalent alternate procedures based on operational experience with the rotorcraft. When alternate procedures are used, full responsibility for compliance with applicable airworthiness safety standards rests with the operator.

b. Procedures. Procedural information should be presented in substantial accord with the categories described below:

(1) Normal Procedures. Normal procedures are concerned with peculiarities of the rotorcraft design and operating features encountered in connection with routine operations, including malfunction cases not considered in the other procedures section (i.e., not considered to degrade safety). Material conforming to the above should be presented for each phase of flight, following in sequence from preflight through engine shutdown, and should include, but not be limited to, systems operation (including fuel system information prescribed in § 27.1585(b)), missed approaches, balked landings, etc.

(2) Emergency Procedures.

(i) Malfunction or abnormal procedures are included in many flight manuals to provide corrective crew actions that are not as urgent as those in the Emergency Procedures sections. These procedures are concerned with foreseeable situations, usually entailing a failure condition, in which the use of special systems, or the alternate use of regular systems, may be expected to maintain an acceptable level of safety. Typical examples of events considered to entail abnormal procedures are engine failure or conditions that require an engine shutdown (under flight conditions where the failure is not critical), stopping and restarting engines in flight, extending

landing gear or flaps by alternate means, approach in multiengine aircraft with inoperative engine(s), etc.

(ii) Emergency procedures are concerned with foreseeable but unusual situations in which immediate and precise action by the crew, as detailed in the recommended procedures, may be expected to reduce substantially the risk of disaster. Typical examples of incidents considered to be emergencies are fire, ditching, loss of tail rotor thrust or control, etc. It is expected that, in the case of tail rotor failure, the emergency procedures will have been validated by analysis, simulation, or any relevant service experience. The analysis or simulation of the tail rotor control failure procedures may be validated where practical by limited flight test.

(iii) Amendment 27-11 added ditching standards to Part 27. When ditching approval is requested, appropriate procedures and information will be included in the manual. Scale model tests are generally used to prove autorotation “ditching” characteristics and to prove stability in the water (capsize threshold) of the rotorcraft type design. Many rotorcraft designs require emergency float bags that deploy either before water contact or shortly after water contact to provide the flotation and stability necessary to comply with the requirements.

(A) Autorotation altitudes and airspeeds and water contact information, if appropriate, derived from or used during the ditching model tests, should be confirmed during FAA/AUTHORITY flight tests and should be included in the manual. Information concerning sea states or wave height to length ratios, investigated and found satisfactory, may be included in the manual if nonsevere sea states are likely to be exceeded.

(B) Instructions for deploying liferafts may be needed for certain designs. For example, if liferafts are stowed outside the cabin, special instructions may be necessary.

(iv) Evacuation Procedures for Rotorcraft Litter Configurations. Appropriate procedures and minimum crew requirements should be considered and included in the manual or manual supplement, if necessary, to assure timely evacuation.

(3) The use of illustrations to show controls, instruments, explain systems, etc., is encouraged.

(4) If the unusable fuel supply in any tank exceeds 5 percent or 1 gallon, whichever is greater, a statement should appear in the normal procedures section to warn the pilot that the quantity of fuel remaining in the tank when the gauge reads zero is not usable in flight.

AC 27.1585A. § 27.1585 (Amendment 27-21) OPERATING PROCEDURES.

a. Explanation. Amendment 21 to the regulation adds the requirement to present the airspeeds and type of landing surface used in takeoff and landing tests. Additionally, the airspeeds and rotorspeeds for minimum rate of descent and best glide in autorotation at maximum gross weight should be presented in the Rotorcraft Flight Manual (RFM).

b. Procedures. All of the policy material pertaining to this section remains in effect with the following additions:

(1) Takeoff and landing procedures and speeds and the kind of surface used in takeoff and landing tests should be presented in the Normal Procedures section of the RFM.

(2) The airspeeds and rotor speeds corresponding to minimum rate of descent and maximum gliding distance in autorotation should be included in the Emergency Malfunction section of the RFM.

AC 27.1587. § 27.1587 (Amendment 27-21) PERFORMANCE INFORMATION.

[See new AC 27.1587A (dated 9/17/2009) posted as separate document in RGL with this Master AC.]

a. Explanation.

(1) This section contains the performance information necessary for operation in compliance with applicable performance requirements of FAR Part 27 and applicable special conditions together with additional information and data essential for implementing pertinent operational requirements.

(2) Performance information and data may be presented for the range of weight, altitude, temperature, and other operational variables stated as operational performance limitations. It is recommended that performance information and data be presented substantially in accordance with the following paragraphs. Where applicable, reference to the appropriate requirement of the certification or operating regulation should be included.

(i) General. Include all descriptive information necessary to identify the configuration and conditions for which the performance data are applicable. Such information may include the complete model designations of rotorcraft and engines, definition of installed rotorcraft features, and equipment that affects performance together with the operative status thereof. This section should also include definitions or terms used in the performance section (i.e., IAS, CAS, ISA, configuration, etc.) plus calibration data for airspeed, altimeter, ambient air temperature, and other information of a general nature.

(ii) Performance Procedures. The procedures, techniques, and other conditions associated with obtainment of the flight manual performance should be included. The procedures may be presented as a performance subsection or in connection with a particular performance graph. In the latter case, a comprehensive listing of the conditions associated with the particular performance may serve the objective of "procedures" if sufficiently complete. Performance figures are based on the minimum installed specification engine.

(iii) Wind Accountability. Wind accountability may be utilized for determining takeoff and landing field lengths. This accountability may be up to 100 percent of the minimum wind component along the takeoff or landing path opposite to the direction of takeoff. Wind accountability data presented in the RFM should be labeled "UNFACTORED" (if 100 percent accountability is taken) and should be accompanied by the following note: "Unless otherwise authorized by operating regulations, the pilot is not authorized to credit more than 50 percent of the performance increase resulting from the actual headwind component and must reduce performance by 150 percent of the performance decrement resulting from the actual tail wind component." In some rotorcraft, it may be necessary to discount the beneficial aid to takeoff performance for winds from zero to 10 knots. This should be done if it is evident that the winds from zero to 10 knots have resulted in a significant degradation to the takeoff performance due to flight through the main rotor vortex. Degradation may be determined by determining the power required to fly, by reference to a pace vehicle, at speeds of 10 knots or less.

(iv) The following list is illustrative of the information that may be provided for a normal category rotorcraft.

(A) Density altitude chart for converting from pressure to density altitude.

(B) Airspeed calibration (calibrated vs. true indicated airspeed) for level flight.

(C) Hover performance charts both in and out-of-ground effect with instructions for their use. The out-of-ground effect hover performance chart is not required but may be useful.

(D) For turbine-powered rotorcraft in all categories, a power assurance check chart.

(E) A statement of the maximum crosswind and downwind components that have been demonstrated as safe for operation near the ground.

(v) Miscellaneous Performance Data. Any performance information or data not covered in paragraphs AC 27.1587a(2)(iv)(A) through (E) above, but considered necessary or desirable to enhance safety or to enable application of the operating regulations, should be included.

(vi) Flightcrew Notes. It is recommended that provisions be made in the "unapproved" portion of the Rotorcraft Flight Manual for inclusion of information and data of a type that is useful or desirable for operation of the rotorcraft but is not approved by FAA/AUTHORITY. (Material in this section should be consistent with material in the approved portion of the manual.)

b. Procedures. None

[See new AC 27.1587A (dated 9/17/2009) posted as separate document in RGL with this Master AC.]

AC 27.1589. § 27.1589 LOADING INFORMATION.

a. Explanation. Control of the rotorcraft weight and balance is an operational function and is the responsibility of the operator. However, instructions necessary to enable loading of the rotorcraft within the established limits of weight and center of gravity and to maintain the loading within such limits are required by the operating regulations, and inclusion of such loading instructions in the Rotorcraft Flight Manual is required by this rule. Approved loading instructions, therefore, must be presented in the Rotorcraft Flight Manual and, at the option of the applicant, may be included in the approved portion or in the unapproved portion.

b. Procedures.

(1) For the purpose of the flight manual, distinction is made here between the loading instructions required by the certification requirements of Part 27 and the weight and balance data required by the operating requirements. The former prescribed information is applicable to the rotorcraft type and is subject to FAA/AUTHORITY approval as flight manual material.

(2) For compliance with the noted requirements, it is necessary for the applicant to develop weight and balance data and loading instructions as necessary to satisfy the needs of both certification and operation. In order to consolidate in one document information on rotorcraft loading, it is recommended that the weight and balance data be developed to include appropriate loading instructions, and that both be included in the Rotorcraft Flight Manual as an “unapproved” section entitled “Weight and Balance.” Such a section should include the following statement as a note: “In accordance with FAA/AUTHORITY procedures, the detail weight and balance data of this section are not subject to FAA/AUTHORITY approval. The loading instructions of this section, however, have been approved by FAA/AUTHORITY as satisfying all requirements for instructions on loading of the rotorcraft within approved limits of weight and center of gravity and on maintaining the loading within such limits.”

(3) For initial approval of the manual, an actual or specimen weight and balance section should be submitted for evaluation and approval of the loading instructions. Weight and balance data for each particular rotorcraft need not be submitted for approval as flight manual material unless a substantive change is made to the approved loading instructions.

(4) The weight and balance material outlined below is believed to be adequate for rotorcraft with conventional loading and fuel-management techniques. For rotorcraft which necessitate redistribution of fuel (other than normal consumption) to maintain loading within prescribed limits, the material should be amplified as necessary.

(i) Weight Limits. A list and explanation, where necessary, of all fixed-weight limitations should be included.

(ii) Center of Gravity Limits. The approved center of gravity ranges should be presented with due accounting for landing gear position.

(iii) Dimensions and Datum Line Locations. The dimensions and relative location of rotorcraft features associated with weighing and loading of the rotorcraft and with weight and balance computations should be described and/or illustrated.

(iv) Equipment List. The rotorcraft should be defined or described sufficiently to identify the presence or absence of optional systems, features, or installations that are not readily apparent. In addition, all other items of fixed and removable equipment included in the empty weight should be listed.

(v) Fuel and Other Liquids. Fuel and other liquids, including passenger-service liquids that are included in the empty weight, should be identified and listed together with information necessary to enable ready duplication of the particular condition.

(vi) Weight Computations. Computations of the empty weight and empty-weight CG location should be included.

(vii) Empty Weight and Empty-Weight Center of Gravity Location. Statement of these values should be included.

(viii) Loading Schedule. Loading schedule should be included, if appropriate.

(ix) Loading Instructions. Complete instructions relative to the loading procedure, or to use the loading schedule, should be included.

CHAPTER 3
AIRWORTHINESS STANDARDS
NORMAL CATEGORY ROTORCRAFT

MISCELLANEOUS GUIDANCE (MG)

AC 27 MG 1. CERTIFICATION PROCEDURE FOR ROTORCRAFT AVIONICS EQUIPMENT.

a. Pretest Requirements.

(1) General. This test guideline has been prepared as an aid in the evaluation of rotorcraft avionics (aviation electronics) equipment installations. The criteria presented are not to be considered exclusive but are offered as one method of evaluating design practice and performance. The testing and qualification of an electronic installation should be considered as consisting of three phases: preinstallation, ground, and flight. The amount of testing necessary during each phase will vary with the amount of testing performed on previous phases. For example, if a system is TSO'd, the preinstallation performance is probably substantiated, and therefore the ground and flight testing can be reduced accordingly. Also, a thorough ground testing program should result in reduction in necessary flight testing. When the operating or airworthiness regulations require a system to perform its intended function, the use of TSO'd equipment or the submission of data substantiating the equipment performance is strongly recommended.

(2) Regulatory References. Sections 27.1301 and 27.1309 (through Amendment 27-19).

(3) System Design. Systems or equipment presented for installation approval, when not qualified by TSO or other approval means, should be accompanied by sufficient data to substantiate their design acceptability.

(i) Operation of Controls. The operation of controls intended for use during flight, in all possible position combinations and sequences, should not result in a condition that would be detrimental to the continued safe performance of the system.

(ii) Electrical Shock. Systems should be designed so that under all probable conditions, the risk of dangerous electrical shock is minimized.

(iii) Fire Hazard. The design of the system should be such that all components meet the applicable fire and smoke protection requirements of §§ 27.853 and 27.863. Cables and equipment to be installed in designated fire zones that are used during emergency procedures should be at least fire resistant.

(iv) Plugs and Cables. Connector pins for sensitive signal circuits should not be adjacent to pins used for ac power circuits. If redundant wiring is used to comply

with systems regulations such as § 27.1309, the wires should be routed through separate plugs and/or cables with as much physical separation as practicable. The system should be designed so that incorrect mating of plugs is not possible. Cable grounding and shielding techniques should be used to minimize electromagnetic interference.

(4) System Performance. Where the operating or airworthiness regulations require a system to perform its intended function, and when the equipment is not qualified by TSO or other approval means, performance data furnished to the FAA/AUTHORITY can reduce the installed performance testing. The appropriate TSO minimum performance standard may be used as a guide.

(i) Environment. An appropriate means for environmental testing is set forth in Radio Technical Commission for Aeronautics (RTCA) document DO-160. The applicant should submit test reports showing that the laboratory-tested categories such as temperature, vibration, altitude, etc., are compatible with the environmental demands to be placed on the rotorcraft.

(ii) Failure Analysis. Section 27.1309(b) requires consideration of system malfunctions or failures.

(5) Installation Design.

(i) Mechanical Installation. Installations should be made to (1) ensure compliance with the airworthiness regulations, and (2) comply with the equipment manufacturer's recommendations. The designer should observe good engineering practices in specifying material type, thickness, fastener type, edge distance, and attachment to the equipment rack. By analysis or static tests, the mounted equipment should be shown to withstand the inertia forces of §§ 27.561(b)(3) and 27.337. Refer to AC 43.13-2A for static test procedures.

(ii) Arrangement and Visibility. The mounting position of all instruments, switches, position labels, and control heads should make them plainly visible to the pilot while in his normal, panel-facing position and under all cockpit lighting conditions likely to occur. TSO approval does not assure instruments will be acceptable in a particular cockpit installation or for all lighting conditions. The instruments, switches, and placarding must be free from reflections. Malfunction annunciation devices should be conspicuous and clearly visible to the pilot. (See AC 20-69 and §§ 27.1321, 27.771, 27.1381, and 27.1555(a)).

(iii) Load Analysis.

(A) Power Sources. It should be determined whether the electrical power source capacity is adequate for the system installation under all foreseeable operating conditions including engine failure on multiengine rotorcraft. System load reductions should be applied or power source capacity increased, if necessary, to assure

compatibility between load and source. If duplicate systems are required, they should be powered from separate buses.

(B) Navigation Course Deviation Circuit Loading. It should be determined that the deviation circuit source impedance is matched by its load and that the source capacity is not exceeded. When the system is capable of transfer, the transfer loads should also be considered (§ 27.1301).

(C) Malfunction Indicator Circuit Loading. It should be determined that the malfunction indicator source impedance is matched by its loads and that the source capacity is not exceeded. When the system is capable of transfer, the transfer loads should also be considered (§ 27.1301).

(D) Synchro Signal Loading. When parallel loads are added to synchro's, the manufacturers' specifications should be reviewed to assure that the additional loads do not result in an overloaded synchro.

(iv) Interface. In many cases, the mating units of a system are designed by different manufacturers. For example, a brand-X gyro may be designed for operation with a brand-X flight director, but later a modifier decides to operate a brand-Y autopilot with the brand-X gyro. This applies just as well to NAV receivers, AREA NAV units, course indicators, omni bearing selectors, tachometer indicators, transmitters, and many other equipment items. When this is the case, the applicant should provide data, in summarized form, describing those characteristics such as impedance, volts, etc. that are necessary to ensure a compatible and reliable system. The data should also reference the source of the interface data (§ 27.1301).

(v) Flight Tests. An FAA/AUTHORITY engineering flight test is required during type certification or after modification that changes the established limitations, flight characteristics, or performance of a rotorcraft or any of its required systems or operating procedures. New installations of equipment in the cockpit or modifications that affect existing equipment in the cockpit should be evaluated by appropriate flight test personnel if it is necessary to evaluate operational aspects of the change. Where possible, cockpit arrangement, placards, markings, instrument visibility, and light reflections can be evaluated on the ground if the applicant opts to darken the windows. Electromagnetic compatibility functional checks, windshield glare, and pilot workload evaluations may be conducted in flight at the FAA/AUTHORITY flight test pilot's option.

(vi) Radio Master Switches. Some installations incorporate radio master switches to control special busses for the avionics systems. If this capability is provided it should be evaluated to assure failure modes are not introduced that will result in excessive or even total loss of all required avionics. One switch that controls all required avionics is not considered acceptable for IFR installations. The evaluation should include an assessment of the loss of the systems to be included on the radio master switch(es), and the subsequent effect on continued safe flight.

b. Test Procedures. Where the airworthiness or operating regulations require a system to perform its intended function, and/or not create a hazard to other required systems, sufficient testing should be accomplished to assure satisfactory performance. When ground testing is not sufficient to properly evaluate a system's performance, flight testing should be accomplished. Acceptable flight test criteria for specific navigation and communication equipment are contained herein. If the rotorcraft is to be approved for IFR operations, the additional criteria of paragraph AC 27 Appendix B should be satisfied.

(1) VHF Systems.

(i) General. Intelligible communications should be provided between the rotorcraft and ground facilities throughout the airspace within 80 nautical miles (NM) of an FAA/AUTHORITY ground facility from radio line of sight altitude to the maximum altitude for which the rotorcraft is certificated. Communication should be provided with the rotorcraft at or above line of sight altitude in right and left bank up to 10° and on all headings.

(ii) Electromagnetic Compatibility (EMC). With all electrical/electronic systems operating in flight, verify by observation that no adverse effects are present.

(iii) Antenna Measurement. If satisfactory antenna measurement data are provided, the following flight test may be reduced to checks in right and left turns in the vicinity of the predicted bearings of worst performance. If antenna locations are symmetrical, tests may be conducted using only one direction of turn.

(A) Long Range Reception. Starting at a distance of 80 NM from the ground facility antenna, perform a right and/or left 360 turn at a bank angle of at least 10°. Communicate with the ground facility every 10° of turn to test the intelligibility of the signals received at the ground station and in the rotorcraft. For 80 NM, the minimum line of sight altitude is approximately 4,000 feet.

(B) Approach Configuration. With the landing gear down and with the rotorcraft in the approach configuration (at a distance of 10 NM from the ground station and in an idle power descent toward the station), demonstrate intelligible communications between the rotorcraft and the ground facility.

(2) HF Systems.

(i) Acceptable communications should be demonstrated by contacting a ground facility at a distance of at least 80 NM. Single sideband equipment should also perform acceptably in the amplitude modulation mode of operation.

(ii) It should be demonstrated that precipitation static is not excessive when the aircraft is flying at cruise speed (in areas of high electrical activity, including

clouds and rain if possible). Use the minimum amount of installed dischargers for which approval is sought.

(3) VOR Systems.

(i) These flight tests may be reduced if adequate antenna radiation pattern studies have been made and these studies show the patterns to be without significant holes (with the rotorcraft configurations used in flight, i.e., landing gear retracted en route and extended for approach). Particular note should be made in recognition that certain rotor RPM settings may cause modulation of the course deviation indication (rotor modulation). VOR performance should be checked for rotor modulation in both approach and en route operation while varying rotor RPM throughout its normal range.

(ii) The airborne VOR system should operate normally with warning flags out of view at all headings of the rotorcraft (in level flight) throughout the airspace within 80 NM of the VOR facility while flying above the radio line of sight altitude to within 90° to 100 percent of the maximum altitude for which the rotorcraft is certified.

(iii) The accuracy determination should be made such that the indicated reciprocals agree within 2°. Tests should be conducted over at least two known points on the ground such that data are obtained in each quadrant. Data should correlate with the ground calibration and in no case should the absolute error exceed ±6°. Fluctuation of the course deviation indication should not be excessive.

(A) En route Reception. Fly from a VOR facility along a radial to a range of 80 NM. The VOR warning flag should not come into view nor should there be deterioration of the station identification signal. The course width should be 20° (±5° tolerance, 10° either side at the selected radial). If practical, perform en route segment on a doppler VOR station to verify the compatibility of the airborne unit. Large errors have been found when incompatibility exists.

(B) Long Range Reception. Perform a 360° right and a 360° left turn at a bank angle of at least 10° at an altitude just above radio line of sight (see b(1)(a) for line of sight altitude) and at a distance of 80 NM from the VOR facility. Signal dropout should not occur as evidenced by the malfunction indicator appearance. Dropouts that are relieved by a reduction of bank angle at the same relative heading to the station are satisfactory. The VOR identification should be satisfactory during the left and right turns.

(C) En route Station Passage. Verify that the To-From indicator correctly changes as the rotorcraft passes through the cone of confusion above a VOR facility.

(4) Localizer Systems.

(i) Flight test requirements may be modified to allow for adequate antenna radiation pattern measurements as discussed under VOR, paragraph AC 27 MG 1 b(3)(i), flight test.

(ii) The signal input to the receiver presented by the antenna system should be of sufficient strength to keep the malfunction indicator out of view when the rotorcraft is in the approach configuration and at least 10 NM from the station. This signal should be received for 360° of rotorcraft heading at all bank angles up to 10° left or right at all normal pitch altitudes, and at an altitude of approximately 2,000 feet.

(iii) The deviation indicator should properly direct the aircraft back to course when the rotorcraft is right or left of course.

(iv) The station identification signal should be of adequate strength and sufficiently free from interference to positive station identification, and voice signals should be intelligible with all electric equipment operating and pulse equipment transmitting.

(v) Localizer performance should be checked for rotor modulation in approach while varying rotor RPM throughout its normal range.

(A) Localizer Intercept. In the approach configuration and a distance of at least 10 NM from the localizer facility, fly toward the localizer front course, inbound, at an angle of at least 50°. Perform this maneuver from both left and right of the localizer beam. No flags should appear during the time the deviation indicator moves from full deflection to on course. If the total antenna pattern has not been shown by ground checks or by VOR flight evaluation to be adequate, additional intercepts should be made.

(B) Localizer Tracking. While flying the localizer inbound and not more than 5 miles before reaching the outer marker, change the heading of the rotorcraft to obtain full needle deflection. Then fly the rotorcraft to establish localizer on course operation. The localizer deviation indicators should direct the rotorcraft to the localizer on course. Perform this maneuver with both a left and a right needle deflection. Continue tracking the localizer until over the transmitter. At least three acceptable front and back course flights should be conducted to 200 feet or less above threshold.

(5) Glide Slope Systems.

(i) Flight Test. The signal input to the receiver should be of sufficient strength to keep the warning flags out of view at all distances to 10 NM from the facility. This performance should be demonstrated at all aircraft headings from 30° left to 30° right of the localizer course. The deviation indicator should properly direct the aircraft back to path when the aircraft is above or below path. Interference with the navigation operation should not occur with all rotorcraft equipment operating and all

pulse equipment transmitting. There should be no interference with other equipment as a result of glide slope operation.

(ii) Glide Slope Intercept. While flying the localizer course inbound in level flight, intercept the glide slope below path at least 10 NM from the station. Observe the glide slope deviation indicator for proper crossover as the aircraft flies through the glide path. There should be no flags from the time the needle leaves the full-scale fly-up position until it reaches the full-scale fly-down position.

(iii) Glide Slope Tracking. While tracking the glide slope, maneuver the aircraft through normal pitch and roll attitudes. The glide slope deviation indicator should show proper operation with no flags. At least three acceptable approaches to 200 feet or less above threshold should be conducted.

(iv) Interference. With all rotorcraft electrical equipment operating and all pulse equipment transmitting, determine that there is no interference with the glide slope operation (some interference from the VHF may be acceptable), and that the glide slope system does not interfere with other equipment.

(v) Glide slope performance should be checked for rotor modulation during the approach while varying rotor RPM throughout its normal range.

(6) Marker Beacon System.

(i) The marker beacon annunciator light should be illuminated for a period of time representing 2,000 to 3,000 feet distance when flying at an altitude of 1,000 feet as it passes over a marker beacon (see following table).

Altitude = 1,000 feet (AGL)

Ground Speed Light Time (Seconds)

Knots	2,000 feet	3,000 feet
90	13	20
110	11	16
130	9	14
150	8	12

(ii) The audio signal should be of adequate strength and sufficiently free from interference to provide positive identification.

(iii) Technical: Approach the markers at a ground speed of 130 knots and at an altitude of 1,000 feet above ground level. While passing over the outer and middle markers with the localizer deviation indicator centered, the annunciators should be illuminated for a period of 9 to 14 seconds. Check for acceptable intensity of the

indicator lights in bright sunlight and at night. For slower rotorcraft, the interval should be proportionately longer.

NOTE: It is recognized that the normal altitude at the middle marker is on the order of 150 to 200 feet. Due to variations in both glide slope angle and position of the middle marker in relation to the runway, the on glide path marker width will vary considerably which in turn will give a widely varying light time. Therefore, the more clearly defined criteria at 1,000-feet altitude should be used for quantitative testing of the middle marker function.

(7) Automatic Direction Finding Equipment (ADF).

(i) Range and Accuracy. The ADF system installed in the rotorcraft should provide operation with errors not exceeding 5° and the aural signal should be clearly readable up to the distance listed for any one of the following types of radio beacons:

(A) 50 NM from an H facility (transmitter power 50-2,000 watts).

(B) 25 NM from an MH facility (transmitter power less than 50 watts).

(C) 15 NM from a compass locator (transmitter power less than 25 watts).

(ii) Needle Reversal. The ADF indicator needle should make only one 180° reversal when the rotorcraft flies over a radio beacon. This test should be made both with and without the landing gear extended.

(iii) Indicator Response. When switching stations with relative bearings differing by approximately 175°, the indicator should indicate the new bearing within ±5° within 10 seconds.

(iv) Antenna Mutual Interaction. For dual installations, there should not be excessive coupling between the antennas.

(v) Technique.

(A) Range and Accuracy. Tune in a number of radio beacons spaced throughout the 200 to 415 kH range and located at distances near the maximum range for the beacon (see 776b(7)(i), Range and Accuracy). The identification signals should be clear and the ADF should indicate the approximate direction to the stations. Beginning at a distance of at least 15 NM from a compass locator in the approach configuration, fly inbound on the localizer front course and make a normal ILS approach. Evaluate the aural identification signal for strength and clarity and the ADF for proper performance with the receiver in the ADF mode. All electrical equipment on the aircraft should be operating and all pulse equipment should be transmitting. Fly over a ground check point with relative bearings to the facility of 0°, 45°, 90°, 135°,

180°, 225°, 270°, and 315°. The indicated bearings to the station should correlate within 5°.

(B) Needle Reversal. Fly the aircraft over an H, LOM, or LMM facility at an altitude of 1,000 to 2,000 feet above ground level. The indicator needle should make only one reversal.

(C) Indicator Response. With the ADF indicating station dead ahead, switch to a station having a relative bearing of approximately 175°. The indicator should indicate within ±5° of the bearing in not more than 10 seconds.

(D) Antenna Mutual Interaction. If the ADF installation being tested is dual, check for coupling between the antennas by using the following procedure.

(1) With #1 ADF receiver tuned to a station near the low end of the ADF band, tune the #2 receiver slowly throughout the frequency range of all bands and determine whether the #1 ADF indicator is adversely affected.

(2) Repeat 776b(7)(v)(A) with #1 ADF receiver tuned to a station near the high end of the ADF band.

(8) Distance Measuring Equipment (DME).

(i) The DME system should:

(A) Continue to track without dropouts when the rotorcraft is maneuvered throughout the air space within 80 NM of the VORTAC station and at altitudes from the radio line of sight to the maximum altitude for which the rotorcraft is certificated. This tracking standard should be met with the rotorcraft in the cruise configuration, at bank angles up to 10°, climbing and descending at normal maximum climb and descent attitude, and orbiting a DME facility.

(B) Provide clearly readable identification of the DME facility.

(C) DME operation should not interfere with other systems aboard the rotorcraft (some interference with the transponder may be acceptable), and DME operation should not be adversely affected by other equipment.

(D) DME Hold. The DME should continue to operate and track when DME Hold is activated and the channel switch is varied.

(E) DME Override. When an override switch is provided, proper operation should be demonstrated.

(ii) Technique.

(A) Long Range Reception. Perform two 360° turns, one to the right and one to the left, at a bank angle of 8° to 10° at least 80 NM from the DME facility. A single turn will be sufficient if the antenna installation is symmetrical. There should be no more than one unlock, not to exceed one search cycle (maximum 35 seconds), in any 5 miles of radial flight.

(B) Approach. Make a normal approach to land at a field with a DME located on the airport. The DME should track without an unlock (station passage excepted).

(C) DME Hold. With the DME tracking, activate the DME hold function. Change the channel selector to a localizer frequency. The DME should continue to track on the original station.

(9) Transponder Equipment.

(i) Performance Criteria. The ATC transponder system should furnish a strong and stable return signal to the interrogating radar facility when the rotorcraft is flown in straight and level flight throughout the air space within 80 NM of the radar station from radio line of sight to within 90 to 100 percent of the maximum altitude for which the rotorcraft is certificated. The airborne system should be controllable so that objectionable ring-around, spoking, and clutter will not persist. The transponder system should not interfere with other systems aboard the rotorcraft and other equipment should not interfere with the operation of the transponder system (some interference from DME operation may be acceptable). When the rotorcraft is flown in the following maneuvers within the airspace described above, the dropout time should not exceed 20 seconds.

(A) In turns at bank angles up to 10°.

(B) Climbing and descending at normal maximum climb and descent attitude.

(C) Orbiting a radar facility.

(ii) Technique.

(A) Climb and Distance Coverage: Beginning at a distance of at least 10 NM from and at an altitude of 2,000 to 3,000 feet above that of the radar facility and using a transponder code assigned by the ARTCC, fly on a heading that will pass the rotorcraft over the facility. At a distance of 5 to 10 NM beyond the facility, operate the rotorcraft to maintain an altitude above radio line of sight while maintaining the aircraft at a heading within 5° from the radar facility to 80 NM from the radar facility.

(B) Communicate with the ground radar personnel for evidence of transponder dropout. During the flight, check the ”ident” mode of the ATC transponder

to assure that it is performing its intended function. Determine that the transponder system does not interfere with other systems (except possibly the DME) aboard the rotorcraft and that other equipment (except possibly the DME) does not interfere with the operation of the transponder system. There should be no dropouts, that is, when there is no return for two or more sweeps. The operation of the ATC transponder should be verified over the station at 25 NM and at 80 NM.

(C) Long Range Reception. Perform two 360° turns, one to the right and one to the left, at bank angles of 8° to 10° with the flight pattern 80 NM from the radar facility. During these turns, the radar display should be monitored and there should be no signal dropouts (two or more sweeps).

(10) Weather Radar Equipment.

(i) Bearing Accuracy. The indicated bearing of objects shown on the display should be within 5° of their actual magnetic bearing within the sectors 40° right and left of the aircraft longitudinal axis. Beyond 40° right and left, bearing accuracy should be ±10°.

(ii) Distance of Operation. The radar should be capable of displaying prominent targets throughout the distance and angular range of the display.

(iii) Antenna Stabilization. When antenna stabilization is provided, it should eliminate blurring of the display for the ranges of pitch and roll for which it is designed.

(iv) Beam Tilting. The radar antenna should be installed so that its beam is adjustable to any position between 10° above and 10° below the plane of rotation of the antenna.

(v) Technique.

(A) Bearing Accuracy. Fly under conditions that allow visual identification of a target, such as an island, a river, or a lake, at a range within 10 percent of the maximum range of the radar. When flying toward the target, select a course that will pass over a reference point from which the bearing to the target is known. When flying a course from the reference point to the target, determine the error in displayed bearing to the target on all range settings. Change heading in increments of 10° and determine the error in the displayed bearing to the target.

(B) Contour Display (Iso Echo). If heavy cloud formations or rainstorms are reported within a reasonable distance from the test base, select the contour display mode. The radar should differentiate between heavy and light precipitation. In the absence of the above weather conditions, determine the effectiveness of the contour display function by switching from normal to contour display while observing large

objects of varying brightness on the indicator. The brightest objects should become the darkest when switching from normal to contour mode.

(C) Stability. While observing a target return on the radar indicator, turn off the stabilizing function and put the aircraft through pitch and roll movements. Observe the blurring of the display. Turn the stabilizing mechanism on and repeat the roll and pitch movements. Evaluate the effectiveness of the stabilizing function in maintaining a sharp display.

(D) Ground Mapping. Fly over areas containing large, easily identifiable landmarks such as rivers, towns, islands, coastlines, etc. Compare the form of these objects on the indicator with their actual shape as visually observed from the cockpit.

(E) Mutual Interference. Determine that no objectionable interference is present on the radar indicator from any electrical or radio/navigational equipment when operating, and that the radar installation does not interfere with the operation of any of the rotorcraft's radio/navigational systems.

(11) Area Navigation. Advisory Circular 90-45A is the basic criteria for evaluating an area navigation system, including acceptable means of compliance to the FAR.

(12) Inertial Navigation. Advisory Circular 25-4 is the basic criteria for the engineering evaluation of an inertial navigation system (INS) and offers acceptable means of compliance with the applicable FAR which contain mandatory requirements in an objective form. The engineering evaluation of an INS should also include awareness of AC 121-13 which presents criteria to be met before an applicant can get operational approval. For flights up to 10 hours, the radial error should not exceed 2 NM per hour of operation on a 95 percent statistical basis. For flights longer than 10 hours, the error should not exceed ±20 NM cross-track or ±25 NM along track error. A 2 NM radial error is represented by a circle, having a radius of 2 NM, centered on the selected destination point.

(13) Doppler Navigation. Doppler Navigation System installed performance should be evaluated in accordance with AC 121-13, Self-Contained Navigation Systems (Long Range). (See Part 121, Appendix G).

(14) Radio Altimeters. Radio Altimeter System installed performance should be evaluated in accordance with RTCA Document DO-123, Appendix A, Part II.

(15) Emergency Locator Transmitters (ELT).

(i) ELT performance should be evaluated in accordance with TSO-C91. ELT installations should be examined for potential operational problems. There have been numerous instances of interaction between ELT and other VHF installations. ELT antenna installations in close proximity to other VHF antennas should be suspect.

Antenna patterns of previously installed VHF antennas should be measured after an ELT installation. Some problems caused by ELT installations are as follows:

(A) Loss of radiated power from VHF communications.

(B) Reradiation of VHF transmitter energy such that navigation crosspointers are affected.

(C) Reception of FM broadcast, at high level, in VHF communications.

(D) Inadvertent activation of the ELT by VHF transmitted energy. (See AD 72-22-3.)

(ii) ELT installation. TSO-C91 specifies that the ELT be automatically activated when subjected to a force of 5.0(±2,-0)g in the direction of the longitudinal axis of the aircraft. This recommendation for mounting is considered satisfactory for rotorcraft. In recognition of the significant vertical impact velocity that rotorcraft commonly have, an optional placement of the ELT pitched down 30° from the horizontal axis of the rotorcraft is also satisfactory.

(16) Audio Interphone Systems. Acceptable communications should be demonstrated for all audio equipment including microphones, speakers, headsets, and interphone amplifiers. All modes of operation should be tested, including operation during emergency conditions (i.e., emergency descent, and oxygen masks) with all rotorcraft engines running, all rotorcraft pulse equipment transmitting, and all electrical equipment operating.

(17) Portable Battery Powered Megaphones (AC 121-6). Megaphone performance should be evaluated in accordance with AC 121-6.

(18) Omega and Omega/VLF Navigation Systems. Omega and Omega/VLF Navigation systems should be evaluated in accordance with the following advisory circular that applies to the type of approval requested:

(i) AC 120-37, Approval of Omega Systems as a Sole Means of Overwater Long Range Navigation.

(ii) AC 120-31A, Approval of Airborne Omega Navigation Systems as a Means of Updating Self-contained Navigation Systems.

(iii) AC 20-101B, Approval of Omega and Omega/VLF Navigation.

(19) Rotorcraft Condition Monitoring System Installations.

(i) General. Avionic equipment and systems are being installed in rotorcraft to collect data to be used in assessing engine/rotorcraft performance and

frequency of maintenance. Some of the items monitored are engine operating exceedances, hot starts, power assurance, and cycle counts.

(A) The monitoring systems being addressed by this paragraph are those used to collect data for maintenance purposes not those monitors which are utilized as part of the control systems for autopilot/flight controls or engine controls.

(B) At present, optional approvals are being requested for most of these systems not performing any required functions. However, most of the applicants anticipate requesting approval for the system to be used in the future to perform some required function or to allow required maintenance to be predicated on the operation of the system. This consideration becomes particularly important if the system is software based. A further discussion of system software is included in paragraph AC 27 MG 1 b(19)(iii)(B).

(ii) System Installation. The system installation should be shown to be free from hazards considering both normal operation and possible malfunctions. Malfunctions which might be caused by software errors are discussed under paragraph AC 27 MG 1 b(19)(iii)(B). The accuracy and response of the monitoring device/system should be sufficient to allow the operational and maintenance personnel to relate the data obtained to required maintenance actions. The exceedance (engine limit) information being acquired by these systems is or will be used in place of information previously acquired from field reports of operational personnel utilizing the basic aircraft instruments. In this case, the automated system will generally produce results which are more accurate than the basic aircraft instruments. However, in this circumstance, it is not appropriate to require the monitor system to be more accurate than the previously approved methods used to provide the required exceedance data. If the data collected by the system require filtering prior to use, it is equally acceptable to accomplish this filtering either as the data are being acquired (airborne function) or when the data are analyzed (ground based function) and used in the maintenance of the rotorcraft.

(iii) System Components.

(A) Hardware. The hardware of the system when operating under the control of the imbedded software should be shown to comply with § 27.1301. Additionally, in showing compliance to § 27.1309(a), laboratory testing to the appropriate portions of the latest revision of RTCA Document DO-160 should be performed.

(B) Software. If the function of the monitor system depends on embedded airborne software to determine all or part of its functioning, Document DO-178 is the recommended standard to be used for the approval of the system software. A further discussion of the use of this document is included in paragraph AC 27.1309. The selection of the software level should be carefully considered because system approval is sometimes initially sought on the basis of the system being a non-required optional

system. If it has further been shown that no dependence is made on the system software to preclude a hazardous failure mode, then a low software level would be acceptable. However, it is very difficult to qualify software to higher levels of "quality" once the software has been initially certified. Because of this, it is recommended that the software be chosen to the level consistent with the ultimate use to which approval of the system is planned. If the system is to be approved only as non-required optional equipment, then the choice of a low level of software qualification may be appropriate. However, when more experience is gained with the operation of the system, and it is ultimately planned to seek approval to perform required functions, then an appropriate higher level of software should be initially obtained.

NOTE: Extensive service experience should not be considered as a basis for level of criticality without accomplishing RTCA DO-178 procedures.

(20) Rotorcraft Health and Usage Monitoring Systems (HUMS).

(i) General. HUMS can be divided into two major categories: Health Monitoring Systems and Usage Monitoring Systems. The provisions of § 27.1301 are used to determine that the system performs its intended function. The provisions of § 27.1309(a) and (b) are used to look at the impact of environmental conditions and malfunctions. To date (mid-1990) HUMS have not been approved to replace service life or other specific physical limits but several systems are now in the process of seeking approval. Health monitoring systems are considered to be the serious applications of this technology, and it will probably be some time before the necessary data base to allow full reliance on this technology is available. There have been numerous approvals of usage monitoring systems as optional equipment, and a good example of this technology is a condition monitoring system described in paragraph AC 27 MG 1 b(19) above.

(ii) Health Monitoring Systems.

(A) It is anticipated these systems will begin as "optional" systems in order to build a data base to support expansion of the approval to achieve credit for extension of maintenance intervals, and so forth. Some of these applications may require system redundancy, and some may require DO-178A Level I or equivalent software.

(B) Some systems that are being considered will utilize off aircraft processing of data. If this is to be pursued it should be assumed that the aircraft data will be lost or misplaced at the processing center, and the aircraft system design should consider this possibility. Some on board data storage is one way to account for this lost data. The integrity of the processing center's software should be equal to that of the aircraft software. In addition the intervals for processing the data from each flight should be specified as part of the approval.

(C) Due to the limited experience with these systems it is suggested the issue paper process be utilized to record the progress of the approval, and to provide information for later updating of this AC material.

CHAPTER 3
AIRWORTHINESS STANDARDS
NORMAL CATEGORY ROTORCRAFT

MISCELLANEOUS GUIDANCE (MG)

AC 27 MG 2. STANDARDIZED TEST PROCEDURE FOR ROTORCRAFT DC ELECTRICAL SYSTEM TESTS.

a. Test Requirements.

(1) General. The following functions and characteristics are to be evaluated:

(i) Normal System Operation.

(ii) Parallel Load Division.

(iii) Excitation.

(iv) Stabilization.

(v) Systems Malfunction.

(vi) Environmental Capability.

(vii) Electromagnetic Compatibility.

(viii) Cooling Capability.

(ix) Surge Characteristics, Ripple Voltage, and Voltage Spikes.

(2) Instrumentation. Calibration records should be available for all instrumentation. Enough specific currents and voltages should be recorded to allow reconstruction of any sequence of events that would happen as a result of any system testing described herein.

(3) Regulatory References. Sections 27.1301, 27.1307(c), (d), (e), 27.1309, 27.1351, 27.1353, 27.1357, 27.1361, 27.1365, and 27.1367.

(4) Miscellaneous, The assigned FAA/AUTHORITY systems and equipment engineer normally witnesses these tests and should be notified as far in advance of the testing as possible to minimize scheduling problems. Conformity of the test setup must be established prior to conducting any testing. Most of the above test categories can be conducted on a bench test setup. A bench test setup is especially recommended in the case of the system malfunction test. It is the applicant's option to demonstrate his equipment either on the bench or installed for ground tests. When a bench setup is

used, it should represent the actual aircraft installation to the extent that components and wiring (type, gage, and length) are duplicated. Some retesting may be necessary on the aircraft to verify the bench test results.

b. Ground and Bench Test Procedures.

CAUTION: Prior to disconnecting the battery and removing or adding large loads, either isolate the avionics systems or assure that transients induced are within limits of the avionics equipment.

(1) Normal System Operation.

NOTE: Equipment should be operated for at least 10 minutes prior to each test as a warm-up.

(i) Minimum electrical load for paralleling and minimum engine RPM.

(ii) Vary RPM of all engines from low to high and back to low.

(iii) Repeat b(1)(ii) for maximum and 50 percent of maximum electrical loads.

(2) Parallel Load Division (if parallel system).

(i) Minimum electrical load for paralleling and minimum engine RPM.

(ii) Fifty percent of maximum electrical load and minimum engine RPM.

(iii) Maximum electrical load and minimum engine RPM.

(iv) Minimum electrical load for paralleling, vary No. 1 engine RPM from low to high and back to low while holding the RPM of the other engine at minimum (low).

(v) Repeat b(2)(iv) for each other engine on the rotorcraft.

(vi) Repeat b(2)(iv) and b(2)(v) procedures with 50 percent of maximum electrical load.

(vii) Repeat b(2)(iv) and b(2)(v) procedures with a maximum electrical load.

(3) Excitation.

NOTE: All of these tests are to be conducted with the battery OFF since the purpose of the tests is to determine if the ship's battery is necessary for excitation of the alternator(s)/generator(s).

(i) Minimum anticipated electrical load, low engine RPM, and alternator(s)/generator(s) OFF. Demonstrate that when an alternator/generator is turned ON, it will come on the line. Repeat for any other alternators/generators in the system.

(ii) Maximum electrical load, low engine RPM, and alternator(s)/generator(s) OFF. Demonstrate that each alternator/generator will individually come on the line.

(iii) Minimum anticipated electrical load, high engine RPM, and alternator(s)/generator(s) OFF. Demonstrate that each alternator/generator will individually come on the line.

(4) Stabilization.

NOTE: All of these tests are to be conducted with the ship's battery OFF, since the purpose of the tests is to determine if the ship's battery is necessary for stabilization of the alternator/generator. In each case, if the ship's battery is not necessary for stabilization, the alternator/generator should be on the line and remain there at a satisfactory voltage level.

(i) Minimum anticipated electrical load, low engine RPM, alternator(s)/generator(s) ON. Switch on the heaviest electrical load that is anticipated to be installed on the aircraft.

(ii) Repeat b(4)(i) for a maximum electrical load and low engine RPM.

(iii) Repeat b(4)(i) for a minimum anticipated electrical load and high engine RPM.

(iv) Repeat b(4)(i) for a maximum electrical load and high engine RPM.

(5) System Malfunctions.

(i) System malfunction testing should be conducted as necessary to verify a fault analysis of the proposed electrical system. Depending on the complexity of the proposed system and the comprehensive nature of the system fault analysis, these tests may be necessary. Analysis/testing is typically only required for IFR and CAT A complex electrical systems, not basic Part 27 systems. This satisfies the need to verify all analysis, and complex designs are usually verified by tests. IFR and CAT A electrical systems are complex in nature and tests are required to verify the analysis.

Additionally, IFR and CAT A requirements refer back to Part 29 requirements for systems and these systems must meet their Part 29.1309 requirements.

(ii) Overcurrent faults (faults to airframe ground that are less than 5.0 Milliohms) should be applied to buses and feeders as necessary to demonstrate that the system's overcurrent circuit protective devices are properly coordinated and provide adequate protection/fault isolation.

(iii) Simulate an overvoltage condition on each alternator/generator to demonstrate satisfactory operation of the overvoltage sensing network. On a multiengine configuration, the faulty alternator/generator should be removed without affecting operation of the remainder of the system.

(iv) As appropriate, the annunciation circuitry should be checked for indication of failures such as overvoltage, tripped generators, overcurrent, open feeders, open tie breakers, etc.

(6) Aircraft Ground Tests. If the above tests (reference b(1) through (4) inclusive) are conducted on a bench setup, enough tests should be repeated on the aircraft to validate the bench test results. The following tests should be conducted on the aircraft:

(i) Normal Battery Starts. Start all engines on the aircraft following the normal procedure prescribed in the flight manual. Record starter volts and amperes, time, and any other parameters deemed necessary.

(ii) Ground Power Cart Starts. If the aircraft is equipped with a plug for a ground power cart, use the procedure described in the flight manual and start all engines. Record starter volts and amperes, time, and any other parameters deemed necessary.

(iii) Emergency Battery Operation (if provided). The emergency battery mode of operation should be tested to assure at least proper switching, annunciation, and battery capacity. In some instances, an analysis of battery capacity may be adequate.

(iv) Distribution System Tests. With all systems operating individually, open and close feeder circuit breakers and system circuit breakers and assure separation of power sources. If the opening of the feeder protection has been satisfactorily demonstrated on a bench test facility, it should not be necessary to repeat that demonstration on the actual aircraft. The effect of loss of power sources should also be demonstrated on the aircraft.

(v) Other Tests. Conduct other tests as necessary to demonstrate proper operation of the specific design being evaluated.

(7) Environmental Qualification. Each component of the system, such as relays, switches, alternator, generator, sensor, regulator, diode, etc., should be qualified to the critical environmental parameters. The temperature, altitude, humidity, and vibration expected in the approved aircraft operational envelope should fall within those limits the applicant substantiates for the electrical system components. (Refer to paragraph AC 27.1309.)

(8) Electromagnetic Compatibility. At no time during any of the qualification testing described herein should objectionable interference in the aircraft's radio, navigation, cockpit instrument, autopilot, or interphone system be considered acceptable.

NOTE: The quantitative type testing used for paragraphs b(7) and (8) above is outside the scope of this document. The latest revision of RTCA Document DO-160 is an acceptable standard.

(9) Transient Tests. The dc system should be tested and shown to exhibit surge, ripple, and spike voltages within the limits of the latest revision of RTCA Document DO-160.

(i) The surge and ripple voltage tolerance of avionic equipment is defined by section 16 of the latest revision of RTCA Document DO-160. Category Z is considered applicable to rotorcraft dc systems.

(ii) The voltage spike tolerance of avionic equipment is defined by section 17 of the latest revision of RTCA Document DO-160.

(10) Ground and Bench Test Report. At the conclusion of the ground and bench test program, a report should be prepared and submitted that contains at least the following:

(i) System schematic (including instrumentation tie-in).

(ii) Instrumentation list (including calibration records).

(iii) Test result recordings.

(iv) Detailed procedures and results obtained.

(v) Conformity inspection records.

(vi) Other data, photographs, etc., to describe the test setup.

(vii) Summary of the test results. This summary should show the maximum load to which each bus, alternator/generator, etc., has been tested.

(viii) Analysis of test results. This should describe how compliance with the regulations has been shown.

c. Flight Test Procedures.

(1) Alternator/generator cooling tests should be conducted in accordance with paragraph AC 27.1351.

(2) A cockpit evaluation of the electrical system should be conducted to evaluate:

(i) Switch, circuit breaker, and annunciator identification.

(ii) Visibility of placarding, switches, etc., during bright sunlight and night operation.

(iii) Color of annunciators as related to the function/malfunction annunciated.

(iv) Load meter readability, if appropriate.

(v) Access to essential switches, circuit breakers, etc.

(vi) Electromagnetic interference.

(vii) Compatibility of the electrical system with the rotorcraft flight manual and the need for additional procedures in the rotorcraft flight manual.

(viii) Clarity of functions such as opened feeder breakers, tie breakers, related annunciation, and necessary corrective action in the event of malfunction.

(ix) Absence of undesired functions in relation to switch combinations.

CHAPTER 3
AIRWORTHINESS STANDARDS
NORMAL CATEGORY ROTORCRAFT

MISCELLANEOUS GUIDANCE (MG)

AC 27 MG 3. DEFINITION OF ENGINE ISOLATION FEATURES AS APPLIED TO §§ 27.79(b)(2), 27.141(b)(1), and 27.143(d)(1) (Amendment 27-19).

a. Explanation.

(1) Each of the cited performance and flight characteristic sections of Part 27 mention multiengine rotorcraft meeting transport Category A engine isolation requirements or refer to engine isolation features which ensure continued operation of the remaining engine. Unlike normal category fixed-wing (Part 23, § 23.903(c)) and the transport category fixed-wind and rotorcraft regulations, Part 27 does not provide a general engine isolation rule to make this determination.

(2) While it is clear that Part 27 does not require complete engine isolation, if credit for this feature is claimed (i.e., sudden complete engine power failure is not considered in showing compliance with the cited section), criteria must be established to allow a satisfactory isolation assessment.

(3) An approach which the FAA/AUTHORITY would find acceptable in making a Part 27 engine isolation determination is given. The FAA/AUTHORITY logic for establishing this criteria is also presented.

b. Criteria.

(1) The engine isolation provided may be for an appropriate limited time period.

(2) The failure or malfunction of any engine or the failure of any system that can affect any engine will not--

(i) Prevent the continued safe operation of the remaining engines for the appropriate limited time period; or

(ii) Require immediate action by a crewmember for continued safe operation.

(3) Each engine must be isolated by a firewall, shroud, or equivalent means from the remaining engines.

c. Criteria Rationale.

(1) Category A Minimum Time for Isolation. The acceptance of a limited time period for engine isolation is consistent with the acceptance of a reduced level of safety for a Part 27 rotorcraft. The criteria is also consistent with the Part 27 philosophy of allowing for a controlled landing following engine failure versus the Part 29 Category A principle of continued safe flight and a controlled landing.

(2) Installation Analysis.

(i) The degree of engine isolation can be established by an installation assessment against the § 29.903(b) general isolation requirement, as modified for Part 27 by a limited time period concept.

(ii) Figure AC 27 MG 3-1 is a listing of the Part 29 sections that may be involved in Category A engine isolation considerations. Sections 29.901(c) and 29.903(b) are the general isolation regulations under which the other more specific rules naturally fall. The point that the selection of specific rules from figure AC 27 MG 3-1 does not achieve the desired degree of transport Category A engine isolation, and that the general isolation rules (§§ 29.901(c) and 29.903(b)) must be used, is illustrated by the following examples.

(A) Example #1. No specific requirement from Part 29 (or figure AC 27 MG 3-1) can be cited which precludes a common engine mount. The design of the mount could be such that its failure results in sudden, complete power loss from all engines.

(B) Example #2. No specific Part 29 requirement prohibits a common engine induction system. F.O.D., fire in the induction system, or the adverse affect of engine surge on the remaining engine could result in sudden, complete power loss from all engines.

(C) Example #3. Crosstalk between engine fuel controls (possibly used for power matching) or the use of a common input parameter signal to the fuel controls is not prohibited by any specific isolation rule. Signals could be received which command the simultaneous shutdown of all engines.

(iii) These examples clearly illustrate that specific Part 29 isolation rules cannot be selected to establish appropriate Part 27 engine isolation, and that the installation must be evaluated by the general isolation policy set forth. This can be readily accomplished by a failure mode and effects analysis (FMEA).

(3) Firewalls.

(i) CAR 6.483, prior to Amendment 6-4, effective May 15, 1953, requires “All engines, auxiliary power units, fuel burning heaters, and other combustion equipment which are intended for operation in flight shall be isolated from the remainder

of the rotorcraft by means of firewalls, shrouds, or other equivalent means." This rule would clearly require a firewall between engines of multiengine rotorcraft.

(ii) Amendment 6-4 revised § 6.483 to read "Engines shall be isolated from personnel compartments by means of firewalls, shrouds, or other equivalent means. They shall be similarly isolated from the structure, controls, rotor mechanism, and other parts essential to a controlled landing of the rotorcraft . . ." (remainder essentially identical to current § 27.1191).

(iii) The preamble explanation of Amendment 6-4 states that these changes are "intended to afford greater protection to the crew and passengers in the event of fire during flight." This revision did not intend to authorize less firewall isolation between the engines than was required by the earlier version. Also, the subsequent paragraphs clearly require firewalls between other combustion equipment and the rest of the rotorcraft (§ 27.1191(b)). To accept anything less for the engine is clearly inappropriate. Further, § 23.1191 requires firewalls or equivalent means between each engine and the rest of the airplane, and current safety requirements pertaining to in-flight fires should be no less stringent for normal category rotorcraft.

(iv) The lack of a firewall between engines or any other design arrangements which, in the event of one engine failure creates definable jeopardy for the remaining engines, will result in a significantly lower level of safety than is being assumed by the operators.

(v) A regulation change to clarify this § 27.1191 rule is planned.

d. Guidance.

(1) The minimum appropriate limited time period of engine isolation which would allow establishment of a one-engine-inoperative HV diagram, § 27.79(b)(2), would be defined by the time increment to recognize the engine failure and to make a landing from the most critical point on the desired HV diagram.

(2) The minimum appropriate limited time period of engine isolation to show compliance with §§ 27.141(b)(1) and 27.143(d)(1) considering the sudden power failure of one engine (rather than sudden complete power failure) would be the time increment to recognize the engine failure and to transition to a flight condition where failure of the remaining engine can be tolerated.

(3) Some existing provisions of Part 27 require isolation of certain systems (oil, fuel, and engine controls) without regard to a limited time period. These existing Part 27 engine isolation provisions must be observed regardless of the policy discussed herein.

(4) The limited time period concept must not be utilized to eliminate protection otherwise required by specific rules of Part 27 or to reduce accepted test conditions. For example, lines which carry flammable fluids in areas subject to engine fire

conditions must be fire resistant (§ 27.1183(a)). Fire resistant hose standards require testing for at least 5 minutes at 2000° F.

(5) A failure mode and effects analysis (FMEA) should establish that the failure or malfunction of any engine or the failure of any system that can affect any engine will not--

(i) Prevent the continued safe operation of the remaining engines for the appropriate limited time period.

(ii) Require immediate action by a crewmember for continued safe operation.

(6) As cited earlier, by example, selection of specific engine isolation rules from Part 29 is not effective in assuring that a sudden, complete engine power loss does not occur.

(7) Under the limited time period concept, failure of the second engine must be considered upon expiration of the limited time period. The Rotorcraft Flight Manual must provide the appropriate operating limitations, pilot operating procedures, and performance information limitations to assure continued safe operation following failure of the second engine.

FIGURE AC 27 MG 3-1
Part 29 Engine Isolation Rules

§ 29.861(a)

§ 29.901(c)

§ 29.903(b) and (c) and (e)

§ 29.908(a)

§ 29.917(b) and (c)(1)

§ 29.927(c)(1)

§ 29.953(a)

§ 29.1027(a)

§ 29.1045

§ 29.1047(a)

§ 29.1181(a)

§ 29.1189(c)

§ 29.1191(a)(1)

§ 29.1193(e)

§ 29.1195(a) and (d)

§ 29.1197

§ 29.1199

§ 29.1201

§ 29.1305(a)(6) and (b)

§ 29.1309(b)(2)(i) and (d)

§ 29.1331(b)

CHAPTER 3
AIRWORTHINESS STANDARDS
NORMAL CATEGORY ROTORCRAFT

MISCELLANEOUS GUIDANCE (MG)

AC 27 MG 4. FULL AUTHORITY DIGITAL ELECTRONIC CONTROLS (FADEC)

a. FULL AUTHORITY DIGITAL ELECTRONIC CONTROLS (FADEC) FOR INSTALLATIONS WITH CATEGORY A ENGINE ISOLATION.

(1) Background. The advent of “microprocessor technology” has resulted in rotorcraft engine controls being implemented by digital process control rather than by conventional means. These digital, processor-based full authority engine controls offer many performance advantages (such as isochronous governing) which were not feasible with conventional technology, pneumatic or hydromechanical controls. Because of the incorporation of this advanced technology, some additional considerations must be made of the engine installation to ensure regulatory compliance.

(i) Part 27 does not require engine isolation. The guidance herein does not address FADEC installation certifications which do not desire engine isolation credit.

(ii) In showing compliance with certain performance and flight characteristic sections of Part 27, simultaneous malfunction of engines is not considered if Part 29 Category A engine isolation is achieved. Paragraph AC 27.MG 3 describes, in terms of Part 29 Category A requirements, an acceptable approach for determining that engine isolation, adequate for Part 27 performance and flight characteristic credit, has been achieved. That guidance material should be reviewed, but it is not believed that the limited-time-period concept for engine isolation which could be allowed under Part 27 would affect the FADEC installation requirements. Hence, the guidance for a Part 27 aircraft claiming credit for engine isolation is essentially the same as for a Part 29 Category A rotorcraft.

(2) Procedures. The following is a discussion of some special attention areas when a FADEC installation is to be shown to comply with the Part 29 Category A engine isolation requirements. Paragraph AC 27.1309b(4)(i)(D) of this AC contains a general definition of what constitutes a “full authority” control.

(i) Software Qualifications.

(A) Paragraph AC 27.1309f contains a general discussion on the use of the RTCA/DO-178B document that is used for the approval of system software. FADECs are generally developed to Level A software under RTCA Document DO-178B based on the hazard category of the FADEC failure condition(s). However, if an applicant proposes a FADEC with Level B software based on the Functional Hazard

Assessment results, this will require the proposal to be reviewed and approved by both the Engine Directorate and the Rotorcraft Directorate.

(B) RTCA/DO-178A may still be applicable for those FADECs that were previously developed and approved under DO-178A and the applicant is proposing to make changes to the FADEC software. However, if the applicant proposes to make changes to a DO-178A approved FADEC, the determination on whether the changes should be made under DO-178B or DO-178A will need to be made by the Engine Directorate and Rotorcraft Directorate. When utilizing DO-178A, one might arrive at the conclusion that the engine control, as a required function, is essential; therefore, level 2 software under DO-178A would be appropriate for the control functions. However, for this level 2 category software, errors are presumed to exist and a software error in a full authority control could result in simultaneous unacceptable malfunctions in all engines. The provisions of § 27.1309(b) for the rotorcraft installations to be designed such that no probable malfunction or failure would result in a hazard to the rotorcraft, and the Part 29 engine isolation rule § 29.903(b) would generally preclude this level 2 classification.

(C) System designs which provide redundant distinctive software or an alternate technology control which is automatically selected and meets all of the minimum regulatory requirements would reduce the impact of software errors and may allow the level 2; i.e., essential, software classification. At level 1, it is accepted that the software is sufficiently error free that the software does not require further verification in the installation evaluation.

(ii) Lightning Strike Protection. Paragraph AC 27.1309b(4) contains a complete discussion of an acceptable method of demonstrating that the FADEC, as installed, is adequately protected against the catastrophic effects of lightning.

(iii) Electrical Power System Considerations.

(A) Normal Operation. The system should be evaluated with all power sources operating normally. If additional power source capability is being provided that is above the minimum required for certification, a certain portion of the evaluation should be conducted while operating in the minimum configuration.

(B) Malfunction Conditions. Beginning with the minimum configuration that is required for certification, electrical power system malfunctions should be introduced and the impact on continued FADEC operation determined.

(C) Circuit Protection Location. The circuit protective devices for the FADEC should be located in the cockpit such that they can be readily reset or replaced in flight. The operation of the FADEC system is considered to be essential to safety in flight. Reference § 27.1357(d). The definition for “essential to safety in flight” is given in AC 27.1357b(1)(i).

(D) System Separation. On multiengine applications, each system should be separated from the other system to the maximum extent practical. Wiring should be routed separately. Power should be taken from independent busses and grounds, and system components should be independent of one another.

(E) Periodic Checks. Where periodic checks are appropriate, they should be made at reasonable intervals. This would normally range from preflight checks for certain items of greater concern to a tie-in with normal aircraft maintenance intervals for other items. If a crew check is specified, it should be evaluated to ensure it is a reasonable check. If items to be checked are located in an area that can be covered by interior upholstery, for example, a crew check would not be considered reasonable, and further design considerations may be in order.

(iv) Powerplant Installation Considerations.

(A) Paragraph AC 27 MG 3 cites certain Part 29 provisions as being appropriate if engine isolation is claimed for a Part 27 rotorcraft. The guidance which follows, in part, references two Part 29 general engine isolation rules, §§ 29.901(c) and 29.903(b)(2), which should be considered.

(B) A demonstration of compliance with § 29.901(c) would generally include a failure mode and effects analysis (FMEA) of the powerplant systems as installed. When a FADEC is utilized, the analysis would consider the control's failure modes, the installed engine reaction, the affect on the aircraft, and the crew response to the situation. Combinations of undetected failures should be considered. Engine failures which may be escalated in severity by the FADEC's response to the initial failure should be analyzed. Potentially hazardous failures should be evaluated during flight testing. The requirements of § 29.903(b)(2) and § 27.1309(b)(2)(i) should be reviewed in determining acceptability of failures.

(C) Section 29.903(b)(2), Category A engine isolation, is intended to ensure that a failure will not prevent the continued safe operation of the remaining engine(s) or require immediate action of the crew to ensure continued safe operation. The FADEC's of the individual engines should be independent. Where communication between FADEC's is required (for example, for torque sharing), care should be exercised to ensure that failures which may occur will not result in a power loss to the extent that total power available is less than would be available under OEI conditions. The no-required immediate-crew-action provision would preclude credit for manually selected or operated backup systems in meeting the § 29.903(b) rule. These unrequired backup systems, which may offer the advantage of get-home multiengine capability rather than forced OEI operation, would be evaluated on a no hazard basis.

(D) Section 27.939, turbine engine operating characteristics, intends a flight investigation to ensure that no adverse characteristics are present to a hazardous degree during normal and emergency operation in the allowed flight envelope. The evaluation should include assessment of the minimum FADEC system certification

configuration; i.e., the minimum proposed by the applicant to meet Part 27 requirements. Reduced capabilities (e.g., restrictions on normal collective movements, limited aircraft maneuvers, etc.) may be acceptable for degraded FADEC modes or backup systems not required to meet Part 27 requirements if those degraded capabilities are reasonable and not hazardous as determined by flight evaluation. The restrictions should be specified in the flight manual.

(E) The rotorcraft with FADEC engines must of course meet all of the Part 27 requirements, but the areas described herein are those which deserve special attention.

b. SINGLE CHANNEL FULL AUTHORITY DIGITAL ENGINE CONTROLS (FADEC) IN SINGLE ENGINE ROTORCRAFT APPLICATIONS.

(1) Background. The purpose of this appendix is to provide guidance for compliance to Part 27 and Part 29 Category B regulations when the powerplant installation is a single engine fitted with a single channel FADEC system. The application of single channel FADECs in single engine helicopters requires special considerations because this combination can have a higher probability of FADEC-related malfunctions that could result in loss of ability to execute a controlled power-on landing or operate safely throughout the flight envelope, relative to dual channel FADEC systems or multiengine installations. The issues that should be addressed by the applicant are criticality level of failures as determined from the engine system safety analysis (SSA), the resulting integrity requirements, capability to detect and present failure/fault data to the crew, and the ability of the crew to manage any failures/faults. The term “must” in this policy is used in the sense of ensuring the applicability of these particular methods of compliance when the acceptable means of compliance described herein is used. This policy establishes an acceptable means, but not the only means of certifying a single channel FADEC for single engine application.

(2) Definitions.

(i) Fault or Failure. An occurrence which affects the operation of a component, part, or element such that it can no longer function as intended (this includes both loss of function and malfunction).

(ii) Integrity. The term “integrity” for the purpose of this policy includes the hardware reliability requirements as well as the software level requirements commensurate with the system criticality.

(iii) Single Channel FADEC. A single channel FADEC system is one which provides full authority control of the engine from below ground idle to 100 percent power and in some cases from engine start similar to more complex dual channel redundant FADEC systems, but without a fully capable second channel providing a dual redundant system. The backup for the single channel FADEC is

provided by a less capable channel either by hydromechanical or electronic means, usually for “get-home” purposes rather than for dispatchability.

(3) References. FAR paragraphs 27.901, 27.903, 27.927, 27.939, 27.1141, 27.1143, 27.1309, 27.1581.

(4) Related Documents.

(i) Federal Aviation Regulations (FARs) paragraphs 21.21, 27.1301, 33.28, 33.75

(ii) FAA Advisory Circular AC 29-2C

(iii) Standards - Latest revision of RTCA/DO-178 and RTCA/DO-160; SAE documents

(iv) ARP4754 and ARP4761

(5) Design Requirements for Compliance with FARs 27.901 and 27.1141
FAR paragraph 27.901(b)(1) requires that each component of the installation be constructed, arranged and installed to ensure its continued safe operation between normal inspections or overhauls. FAR paragraph 27.1141 requires that no single failure or malfunction of the powerplant control system will jeopardize the safe operation of the rotorcraft. For an engine with a single channel FADEC some form of redundancy is needed to ensure the continued safe operation of the rotorcraft in the event of a random complete failure. This redundant system must be accessible and provide the pilot with the ability to perform a controlled power-on landing. In addition, FAR paragraph 27.939(a) requires that turbine engine operating characteristics be investigated in flight. Flight tests are required as noted below to demonstrate compliance with the FAR requirements. The following paragraphs provide guidance for meeting these general design requirements.

(i) Redundancy: Because of the random nature of electrical/electronic component failures, there is no assurance that the electronic system will operate safely between established inspection periods. Therefore, some redundancy technique should be applied to the electrical/electronic part of the FADEC system to reduce the probability of losing the ability to land safely or continue safe flight. This redundancy is usually provided by some form of backup system or alternate method of control of the engine. The requirement for a backup system can be achieved with a number of approaches that include a simple mechanical/hydromechanical system, a simple electrical/electronic system that is not a completely redundant channel, or a completely redundant system.

(ii) Availability: A means must be provided either by system design or operational procedures to ensure that the primary and the backup or alternate system are available functionally to serve the intended purpose. The

manufacturer's required interval for testing the backup or alternate system should be based on the expected failure rate established during the failure analysis of the system. However, the pilot should have the capability to test the backup system at the pilot's discretion. Additionally, failure of the primary system must not affect the safe operation of the backup or alternate system.

(iii) Capability of back-up system: Section 27.1143 requires that each power control provide a positive and immediately responsive means of controlling its engine. Additionally, § 27.903 requires that the powerplant systems associated with engine control systems are designed to give reasonable assurance that the engine operating limitations will not be exceeded in service. Although back-up control may be somewhat degraded, the system should allow for control of the engine and the aircraft within their operating limits. It should be demonstrated that upon failure of the primary control the aircraft can continue to be operated safely and execute a controlled power-on landing without creating an undue pilot workload. This includes demonstration of the ability to maintain rotor speed within acceptable limits while transitioning to the backup mode and while using the backup control.

(iv) Ability of crew to switch to back-up: If crew action is required for switching to the back-up mode, this ability must be demonstrated during all phases of flight from any seat which may be occupied by the pilot in command or the copilot. The process to be used by the pilot to switch to the back-up mode should be clearly described in the Rotorcraft Flight Manual (RFM) as required by FAR paragraph 27.1581.

(v) Transfer to backup: The transfer to the back-up mode from the primary control mode or an intermediate mode (fixed position) should occur without excessive time delay or variation in power. Time delays and power variations experienced during the transfer should be evaluated during flight test for acceptability. A means should be provided to alert the pilot that transfer to the back-up mode has occurred.

(vi) Annunciation: Adequate annunciations should be provided to cue the crew of faults/failures and/or transfer of engine controls. These annunciations are of visual and aural types and must be distinct as to purpose and should not be misleading, especially under any fault/failure. Flight evaluation of these annunciations is required before final acceptance can be made.

(vii) Automatic Transfer: If the system is designed to accomplish automatic transfer between control modes, the transfer should occur without excessive variation in power and a means should be provided to alert the pilot that transfer to the back-up mode has occurred. Multiple automatic transfers between control modes may cause aircraft instability. A method to lockout the primary control after its initial failure and automatic transfer to the backup should be

provided. If pilot reset is to be allowed, the procedure should be described in the RFM.

(viii) Calculated failure rate (with unannunciated faults present): Before a calculation of the failure rate can be attempted, the failure should be defined. The determination of failure rate, using the definition of failure, can be the product of a Failure Mode Effects Analysis (FMEA) combined with a reliability analysis, using individual part reliability figures. The figures should come from some recognized data base. The failure rate calculations should consider the worst case application limitations such as flight operation, environmental considerations, and time of operation. The flight operations to be considered for the worst case scenario include all flight segments (take off, cruise, hover, landing, etc.) together and separately for the various missions the aircraft is expected to be used in. Another way to determine failure rate is to use service history. However, service history is applicable only if a high degree of similarity exists for the FADEC and its installed application. The calculated failure rate is the direct result of the FMEA, and should meet the integrity level requirement determined by the Functional Hazard Assessment.

(6) Certification Approach:

(i) Analysis Requirements: Functional Hazard Assessment: Compliance to the requirements of FAR paragraphs 27.1141 and 27.1309 for a single channel FADEC in a single engine application should be based on criticality of application for the system under consideration. This criticality of application may be determined by performing an aircraft level hazard assessment that starts with the type of possible failures and ends with the results of these failures. The results can be categorized into criticality levels and the required integrity levels can be obtained by matching the required integrity level to the criticality level. The main emphasis should be on determining the higher levels of criticality (Major and above) and their source. This process should include consideration of failures seen at the operational level and interaction of the failures with the airframe and crew as well as the system itself. The following subject areas are related to this assessment.

(A) Assumptions: Assumptions should be made about the airframe/crew interface in order to perform the aircraft level hazard assessment. These assumptions are prerequisites to perform an aircraft level hazard assessment and must be listed in this hazard assessment and validated by airframe testing when the airframe is available. If the assumptions cannot be validated, the actual airframe test data must be substituted for the invalidated assumptions (assumed prerequisites) and the hazard assessment re-evaluated with the new data supported prerequisites. The results of this new assessment would be the deciding factor for acceptance of the FADEC system for the installation as designed or provide the necessity for design changes.

(B) Criteria: Acceptance of an engine fitted with a single channel FADEC system in a single engine rotorcraft application requires that the integrity levels of the FADEC system be compliant with the criticality levels determined by the aircraft level Functional Hazard Assessment (FHA). In addition, final acceptance of the system at the aircraft level for the application is based on the integrity level(s) that match the criticality level(s) determined by the hazard assessment that uses data that has been validated during the aircraft flight test program. These assumptions/prerequisites would include operational aspects associated with the possible FADEC failures and would include as a minimum the following:

(1) Crew/aerodynamic response to failure.

(2) Worst case flight operation for failure to occur. (Landing, IFR, etc.)

(3) Duration of flight operation (exposure time).

(4) System interaction with shared Inputs/Outputs with other systems and/or with back-up systems.

(5) Adequate annunciation of failure.

(ii) Validation Criteria:

(A) General:

(1) Validation of the assumptions/prerequisites made by the engine manufacturer in developing the SSA, using aircraft level FHA requirements, must be validated by conducting flight testing during the certification of the installation. The possibility exists that if the assumptions cannot be validated during flight testing, then engine and/or FADEC redesign may be required.

(2) Failure management methods that are related to operational characteristics should be addressed. It should be determined that the FADEC/engine manufacturer's envisioned failure management is desirable and compatible with the operational requirements. Therefore, the following basic FADEC related information should be identified:

(i) The detected failures.

(ii) The failures that are not detected.

(iii) The action that the FADEC takes when failures are detected.

(iv) The failures that are annunciated to the crew and in what manner.

(v) The anticipated operational action required as a result of detected failures.

(vi) Possible operational results of the undetected failures.

(vii) Verification that the assumed worst case flight operation is the worst case.

(B) Manual Backup: Additional aircraft operational testing is required to specifically evaluate the manual backup system for compliance with the FAR requirements. The acceptability of the manual backup system depends substantially on its installation and interface with the airframe. The following items need to be demonstrated in accordance with § 27.927 and §27.939 or accomplished on each application prior to the acceptance of the manual backup system:

(1) It should be demonstrated by flight test with the failure of the primary engine control, that the aircraft can be flown and a safe and controlled power-on landing executed without creating an undue pilot workload.

(2) It should be demonstrated by flight test that switching between control modes will not create an unsafe condition during any phase of operation within the aircraft operating envelope.

(3) The pilot action required as a result of a failure of the primary control and used as an assumption in the FHA and FMEA should be validated during flight tests and listed in the emergency procedures section of the flight manual.

c. FADEC RELIABILITY REVIEW DUE TO INCREASED ROTORCRAFT ENDURANCE

(1) Background. This advisory material is to provide guidance for reevaluation of the FADEC control system reliability due to extension of the aircraft mission endurance. During the initial type certification of an aircraft, an analysis is normally conducted on systems to determine their criticality category (e.g. catastrophic, hazardous, major, etc.) and reliability requirements. To establish a system's reliability, an exposure time is determined by making certain assumptions. In most cases, the exposure time is the average endurance based on the various flight scenarios in which the aircraft is to be used. When an aircraft's expected mission endurance is increased by adding fuel capacity, a new analysis for system reliability should be conducted taking into account the new increased mission endurance.

(2) Requirements.

(i) If the applicant has access to the initial analysis used for the type certification, one method to accomplish the new reliability analysis is by multiplying the exposure time used in the original reliability analysis by the ratio of the increased maximum endurance to the original maximum endurance. That is, if the aircraft endurance increases by 50 percent due to additional fuel capacity, the assumed exposure time should also increase by 50 percent. The applicant should then rework the analysis using this new exposure time.

(ii) If the applicant does not have access to the initial analysis it will be incumbent upon them to provide the rationale used for determining the new exposure time and to provide a complete analysis for the systems determined to be critical. The FAA engineer should compare this new analysis to the original.

d. CERTIFICATION GUIDELINES FOR COMPLIANCE TO THE REQUIREMENTS FOR ELECTROMAGNETIC COMPATIBILITY (EMC) TESTING FOR NON-QUALIFIED EQUIPMENT AND EQUIPMENT KNOWN TO HAVE A HIGH POTENTIAL FOR INTERFERENCE WHEN INSTALLED ON ROTORCRAFT WITH ELECTRONIC CONTROLS THAT PROVIDE CRITICAL FUNCTIONS.

(1) Background.

(i) Rotorcraft operations are varied and use a wide assortment of equipment. While some of this equipment is qualified to aircraft standards, particularly environmental standards, some of the equipment not qualified to such standards may be the source of harmful electromagnetic interference. Rotorcraft typically have not had electronic controls that perform critical functions, such as engine controls and flight controls; therefore, there was no real concern about requiring equipment to be qualified to aircraft standards. Typically, this equipment was installed with only a cross-matrix operational check for EMC. These tests consisted of operating the equipment in question and checking visually for an indication of interference. The equipment was, for the most part, non-required equipment and the primary concern was that interference might be emitted from the equipment.

(ii) Unqualified equipment and their effects on critical systems is of particular concern due to the recent increase in the number of rotorcraft with electronic engine controls and the implementation of fly-by-wire technology. Additionally, the physical close proximity of installed equipment to electronic controls that provide critical functions is inherent due to the smaller size of most rotorcraft and represents a greater potential for interference than for larger fixed wing aircraft.

(2) Requirements.

(i) The rules to assure that required functions are not subject to interference are provided in the certification basis for the rotorcraft. Although the certification basis may differ between aircraft, the requirements that address electromagnetic interference are similar and result in the same methods for

compliance. A note has been added to the type certificate data sheets for rotorcraft that employ FADECs. This note was added to remind all modifiers that the requirement for addressing interference exists and that special EMI test considerations must be addressed to show compliance. Most EMC considerations can be addressed by the operational interference checks addressed in the background discussion. However, when a critical control function is provided by some electronic means, special EMI test considerations must also be addressed, in addition to the previously described EMC tests. The determination of when these other, more rigorous tests are required is a simple concept, but complex in practice. More rigorous testing is required to satisfy the concern for the installation of equipment that would interfere with the critical control (e.g., FADEC, Fly-By-Wire, etc.) or failure management of the critical control. This class of equipment is "equipment known to have a potential for interference," which may or may not be qualified to an aircraft standard, such as high frequency (HF) radios, high powered radars, hoists, transmitting antennas located near the controls systems, etc. The concern associated with this class of equipment is the possible interference with the critical electronic controls.

(ii) Accomplishment. In addition to the following special testing considerations addressed in paragraph (2)(iii), "EMI Installation Testing for Critical Controls" and "Installation Test Conditions," all installed equipment should undergo a cross-matrix operational check for EMC considerations by operating all equipment under consideration and determining if an interference hazard is created.

(A) Class of Equipment - Equipment Known to Have a High Potential for Interference: This class of equipment should be tested in the installation as described in the "EMI Installation Testing for Critical Controls/Installation Test Conditions," paragraph (2)(iii). Since the concern of this class of equipment is its high potential for interference, its EMI laboratory qualification does not preclude the EMI installation testing.

Equipment that meets any one of the following criteria is considered to be "equipment known to have a high potential for interference."

- Equipment that requires 25 amps or more to operate,
- Equipment that transmits 30 watts or more,
- Equipment with an antenna located 0.5 meters or less from the FADEC, or
- High Frequency (HF) Transmitters of any power.

The types of equipment in this class include HF radios, high-powered radars, hoists, high-powered radios, installations where radio transmission antennas are in close proximity to the controls, and equipment that require large currents to operate or radiate strong electromagnetic fields. Examples of this type of equipment are some Emergency

Medical Service (EMS) equipment, night sun lights, some air conditioners, video and sound systems that require large currents (25 amps – up) to operate, Forward Looking Infrared System (FLIRS), some forward looking radars, some weather radars, some communication systems that transmit 30 watts or more, some data link transmission systems, etc.

NOTE: Equipment that does not meet this criteria is considered to be "equipment not known to have a high potential for interference."

(B) **Class of Equipment – Equipment Not Known to Have a High Potential for Interference**: Once it has been established that the equipment being proposed to be installed is not in the class of "equipment known to have a high potential for interference," per the criteria stated in paragraph (2)(ii)(A), there is no requirement to conduct the EMI installation tests described in the "EMI Installation Testing for Critical Controls/Installation Test Conditions" paragraph (2)(iii). However, the cross-matrix operational checks for EMC considerations described in paragraph (2)(ii) are still required.

(iii) EMI Installation Testing for Critical Controls:

(A) EMI installation testing is no longer required for unqualified equipment that does not have a high potential to cause interference. However, EMI installation testing is the only method of testing to show compliance for interference considerations, for the class of "equipment known to have a high potential for interference." The criteria for determining whether the "equipment is known to have a high potential for interference" is stated in paragraph (2)(ii)(A).

(B) To accomplish the EMI installation tests, there must be an FAA-approved test plan that requires the high interference potential equipment to be operated through all reasonable modes of operation, in order to determine if electromagnetic interference is entering the electronic control system. EMI installation testing consists of interrogating the control, if it has such a feature, to determine if the critical electronic control system is adversely affected (identify the recorded faults that occur during the test). Additionally, real-time monitoring of the control's input/output parameters should be accomplished. The pass/fail criteria is "no detected interference" for a pass state, and conversely a fail state if any interference is detected entering the control. If interference is detected, the source of interference should be investigated to determine if the detected interference is the worst case. In some cases, the detection of interference may result in flight tests being required to determine if the interference is worse in flight. After the worst case interference is defined, the interference must be eliminated at the source, or the interference must be evaluated to assure that the critical electronic controls, its functions, and its related indications do not result in an unsafe condition. For FADECs, special test equipment developed by the engine manufacturer will be required to interrogate and monitor the controls input/output parameters. Other types critical controls may also require special test equipment to perform this type of testing.

(C) Installation Test Conditions: "Equipment Known to Have a High Potential for Interference" represents the main concern for radiated and conductive interference; therefore, ground and flight tests are usually required. Therefore, when the EMI installation tests described in paragraph (2)(iii) are required, ground and flight tests will usually need to be conducted. Ground tests alone are usually not sufficient since some equipment may pose safety issues if operated on the ground, while other equipment cannot be satisfactorily operated on the ground, or the equipment would provide misleading results if operated on the ground. For example, some equipment is prohibited from being operated on the ground, such as hoists.

(D) If the proposed installed equipment has been tested in relation to the critical electronic control system on another identical installation, then there can be an exception to the EMI installation testing requirements defined in paragraph (2)(iii). The data showing identicality of the equipment and installation with passing test data are acceptable in place of further testing on the same type rotorcraft.

(3) Summary. The concern for potential interference to electronic controls that provide critical functions may be addressed by the methods contained within this document. To address the interference aspects of "equipment known to have a high potential for interference," the equipment must be tested as a part of the installation as described in paragraph (2)(iii), during ground and flight tests.

CHAPTER 3
AIRWORTHINESS STANDARDS
NORMAL CATEGORY ROTORCRAFT

MISCELLANEOUS GUIDANCE (MG)

AC 27 MG 5. AGRICULTURAL DISPENSING EQUIPMENT INSTALLATION.

[See new change to AC 29 MG 5 (dated 12/15/2009) posted as a separate document in RGL with this Master AC.]

~~NOTE: This paragraph has been extensively revised and expanded to clarify the restricted category certification of agricultural dispensing equipment installations on rotorcraft.~~

~~a. Explanation. In the early development of the rotorcraft one of its primary usages was agricultural operation. The FAA recognized that the existing requirements, which were designed primarily to establish an appropriate level of safety for passenger-carrying aircraft, imposed an unnecessary economic burden and were unduly restrictive for the manufacture and operation of aircraft intended only for use in rural, sparsely settled areas. Therefore, a special document that established new standards for agricultural dispensing equipment and other special purposes was developed. Restricted Category CAM 8 became effective October 11, 1950.~~

~~(1) During the recodification of 1965, CAR 8 ceased to exist as a regulatory basis and selected portions addressing certification were incorporated into FAR 21. While the specific standards in CAR 8 were not changed substantially when adopted into FAR 21, the less restrictive philosophy of CAM 8 and the policy material that was stated in the preamble to CAM 8 was not clearly conveyed.~~

~~(2) Advisory material published in 1965 and revised in 1975, summarized the information contained in the advisory portions of CAM 8. This new advisory material indicated that the CAM advisory material would be applicable to the related FAR's. Unfortunately, this document specified that CAM 8 could be used in conjunction with certain FAR's for restricted category certification of small agricultural airplanes only. Rotorcraft were omitted.~~

~~(3) A survey of restricted category rotorcraft projects related to agricultural modifications indicates that the CAM 8 philosophy was interpreted to allow the use of AC 43.13-2A structural criteria for most STC's issued through the early 1980's. Since then more restrictive guidance based on CAR 6 and FAR 27 requirements has been applied by some ACO's to several STC applications. Since the more restrictive guidance imposed a significant economic burden on the industry, the HAI requested a meeting with the FAA during the 1990 annual convention in Dallas. As a result of the meeting, an Action Notice to clarify the interpretation of FAR 21.25(a)(1) for restricted category aircraft has been issued.~~

(4) The following advisory material is a result of a reassessment of past and present policy.

b. Procedures. The certification basis for agricultural dispensing equipment in the restricted category is FAR 21.25(a)(1) as interpreted by Action Notice 8110.22. The accountable Directorate guidance for the substantiation requirements for rotorcraft is as follows:

(1) Substantiation of the agricultural dispensing system hoppers or spray tanks to the load factors provided in figure AC 27 MG 5-1 provides for proof of structure. The load factors of figure AC 27 MG 5-1 address the critical structural load conditions of dispensing equipment mounted in or near the fuselage and provide adequate margins of safety.

FIGURE AC 27 MG 5-1
ACCEPTABLE ULTIMATE LOAD FACTOR FOR
AGRICULTURAL DISPENSING EQUIPMENT DESIGN

	UP	DOWN	SIDE	FORWARD	AFT
Tanks & Equipment Mounted In Or Near The Fuselage	1.5g	4.0g	2.0g	4.0g Note 1	- - - -
Spray Booms	1.5g	2.5g	- - - -	Note 1	2.5g Note 2

Note 1: An ultimate load factor of 2 G's is acceptable for externally side or under fuselage mounted tank and forward mounted spray booms where failure in a minor crash landing will not create a hazard to occupants or prevent occupant exit from the rotorcraft.

Note 2: The aft loads for spray booms may be developed by the applicant based on the 111 percent of V_{NE} for which certification is requested or the load factors of figure AC 27 MG 5-1, whichever is greater.

(2) The applicant may elect to substantiate his product by either static or dynamic testing, by analysis, or any combination thereof.

(3) Lower load factors may be used only when justified by manufacturer's data, rational analysis, or actual rotorcraft flight and ground load demonstrations.

~~(4) Tank pressure test, while not mandated, is recommended for safety reasons. An acceptable procedure is included in paragraph c(4).~~

~~(5) Dispensing equipment installation attach points. If attach points exist which are an integral part of the rotorcraft and these attach points have been certified to the standard category requirements no further substantiation of the attach point is required if an analysis indicates the dispensing system does not impose loads which exceed those for standard category certification.~~

~~(6) Ground clearance for dispensing equipment installation. A 5-inch ground clearance has typically been used for skid gear equipped rotorcraft which incorporate belly mounted supply tanks/hoppers or systems which have dual side mounted supply tanks/hoppers and the design incorporates cross tubes or other system components which are located beneath the bottom of the fuselage when these components are rigidly attached to the airframe structure. The 5-inch dimension is measured vertically from the ground to the lowest point of the installed system, with the rotorcraft in its operational configuration and gross weight (including disposable load) and while resting on a smooth, level asphalt surface. For rotorcraft equipped with wheels and/or landing gear struts, the maximum system deflections should be considered when determining the 5 inches of acceptable static ground clearance. The 5-inch ground clearance would only apply to original configuration of newly manufactured rotorcraft. However, a 3-inch ground clearance has been found acceptable and may be approved for skid gear equipped rotorcraft to account for the in-service permanent set allowed for skid gear members, (i.e., cross tube deflections allowed per the maintenance manual). Cable supported systems, (i.e., cargo hook installations) or dispensing systems utilizing flexible ducts (certain types of dry material dispensing equipment which may or may not be retractable) have been approved even though portions of the system may contact the surface during a normal landing.~~

~~(7) A number of rotorcraft are approved for external cargo operations that allow a gross weight higher than the approved internal gross weight limit. This difference is usually due to the allowable weight limit restriction of the landing gear. (The gear is not approved for the higher weight.) Those types of dispensing equipment, that can be loaded in flight to a weight that exceeds the allowable limit of the landing gear should incorporate a reliable means that rapidly reduces the total aircraft gross weight to within allowable landing gear limits. In most cases, this will involve jettison of the disposable load. The time interval for this operation should be demonstrated, and should not exceed a recommended 3 seconds from a level flight condition.~~

~~(8) A flight check or demonstration of the agricultural dispensing equipment installation is normally conducted. This flight check should also qualitatively determine that no hazardous deflection or resonance in the rotorcraft or dispensing system exists. For FAA flight operations approval, this flight check must be conducted in accordance with the requirements of FAR 133.41. In addition, recent service history has shown that external equipment and external fixture modifications can affect main rotor mast bending loads. In lieu of a mast bending survey, a pre and post modification flight test may be conducted at identical weights, center-of-gravity (CG), power, and density~~

~~altitude to compare a critical control position parameter (typically longitudinal cyclic stick position) at pre and post modification Vne airspeeds.~~

~~(i) If required, the post modification Vne should be reduced so that the post modification longitudinal cyclic stick position is slightly aft of (or less than) the pre modification stick position. This alternative procedure assumes that the static longitudinal stability of the helicopter has not been altered by the modification. For helicopters with neutral static stability, a more comprehensive investigation may be required.~~

~~(ii) In some cases, a control position parameter other than longitudinal stick position may be critical. For example, a heavy external device mounted to the side of the helicopter that gives a lateral CG close to the limit and an asymmetric yaw component would require pre and post modification lateral cyclic stick and pedal position measurements. Operating limitations other than Vne may need to be established, or reduced from pre modification limitations, to ensure pre modification mast bending is not exceeded.~~

~~(9) For rotorcraft certificated in dual categories, the inspection requirements of FAR 21.187(b) must be observed when converting from restricted to normal category.~~

~~c. Acceptable Means of Compliance.~~

~~(1) Analysis Method. Structural analysis (static) may be used if the structure is of a configuration for which experience has shown the method to be reliable. Structural substantiation of tanks that are designed to contain liquid materials may be accomplished by pressure testing. For tanks or hoppers designed to contain dry material, (e.g., dust or fertilizer) static load tests may be used to verify structural integrity. The tank/hopper, mounting hardware, and support structure should all be substantiated to the load conditions specified by this paragraph considering the effects of internal fluid pressures when applicable.~~

~~(2) Static Tests. Static tests of tank/hoppers, mounting hardware, and support structure for each critical load condition may be accomplished using conventional techniques; such as, dead weight loading, whiffletree systems, and hydraulic rams. If tests of the tank and its mounting hardware are conducted using a test fixture representing the rotorcraft, the rotorcraft support structure may be substantiated independently by means of test and/or analysis. Static test loads should be applied in combination with associated internal fluid pressure loadings. The ultimate loads specified in paragraph AC 27 MG 5 should be sustained for at least 3 seconds without failure.~~

~~(3) Dynamic Tests.~~

(i) If the applicant elects to test to the load factors noted herein, the maneuvering and gust loadings will be considered to be adequately substantiated. For each condition, the critical volume and density of fluid should be used.

(ii) The tank and mounting hardware should support ultimate loads without detrimental permanent set or failure, respectively. The rotorcraft support structure may be included in the dynamic tests, or it may be substantiated separately via static test and/or analysis for each condition specified by this paragraph.

(4) Pressure Testing. Internal pressure loads may be applied using the water standpipe technique. Standpipe water height should be accurately computed for each critical spray tank static test loading. Pressure testing of spray tanks is not absolutely essential but is recommended for safety reasons. This testing will also determine whether the joints and connections are tight and will not leak in addition to determining any weak spots in the construction. Where spraying is done with highly volatile and flammable liquids, or where the tank has a return line, such as in an engine oil tank where the fluid is pumped back into the tank, it is recommended that the tank be tested for a pressure of 5 pounds per square inch. For other liquids, and where no fluid return line is used, testing to 3 ½ pounds per square inch should be satisfactory. There are many ways of pressure testing a tank, however, it is believed that the simplest and easiest method is to fill the tank with water and use a standpipe filled with water. A 1 1/8-inch pipe can be connected to the venting tube or one adapted to the filler opening. In either case the height of the pipe would be the same. For a 3 ½ PSI test of the tank the height of the water in the pipe would only need to be 8 feet and for a 5 PSI test only an 11 ½ -foot height of water will be needed.

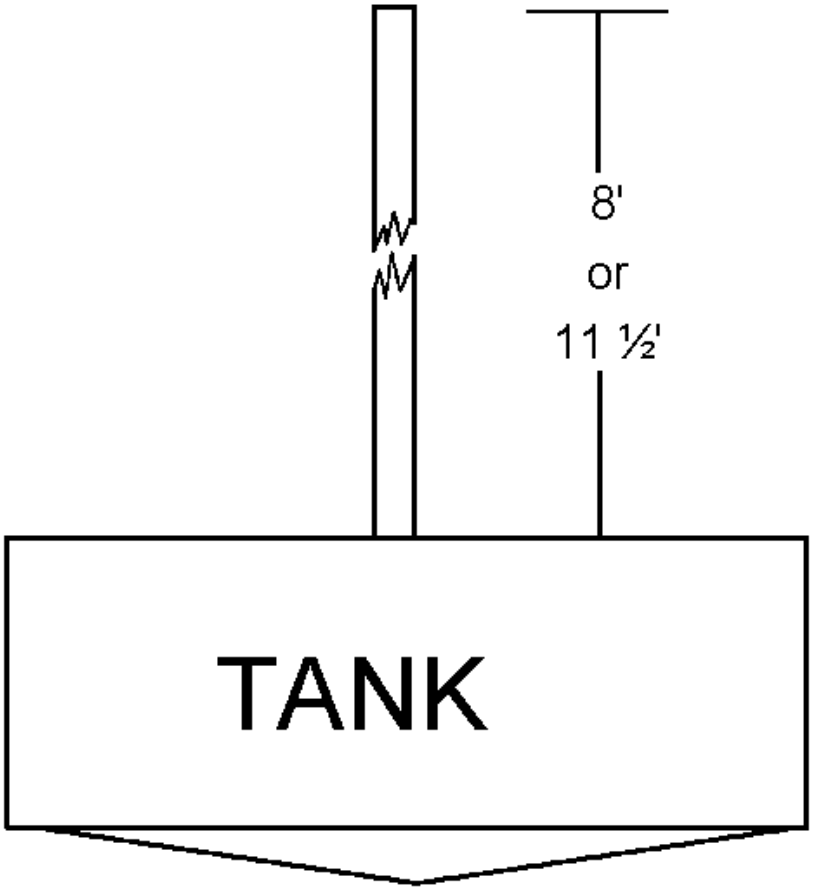

FIGURE AC 27.MG 5-2 SKETCH OF TANK PRESSURE TEST

CHAPTER 3
AIRWORTHINESS STANDARDS
NORMAL CATEGORY ROTORCRAFT

MISCELLANEOUS GUIDANCE (MG)

AC 27 MG 6. EMERGENCY MEDICAL SERVICE (EMS) SYSTEMS INSTALLATIONS INTERIOR ARRANGEMENTS, AND EQUIPMENT.

[See new change to AC 27 MG 6 (dated 2/27/14) posted as a separate document in RGL with this Master AC.]

~~a. Explanation. This paragraph pertains to EMS configurations and associated rotorcraft airworthiness standards. EMS configurations are usually unique interior arrangements that are subject to the appropriate airworthiness standards, FAR Part 27 or its predecessor CAR Part 6, to which the rotorcraft was certificated. No relief from the standards is intended except by § 21.21(b)(1) or exemption. EMS configurations are seldom, if ever, done by the original manufacturer.~~

~~(1) The FAA/AUTHORITY has not specified in the airworthiness or operating rules the minimum equipment for an EMS configuration. Whatever equipment is presented for evaluation and approval is subject to compliance with the airworthiness standards. Any equipment that is not essential to safe operation of the aircraft is evaluated for a "no hazard approval," i.e., it is optional equipment and may be approved provided the use, operation, and possible failure modes of the equipment are not hazardous to the aircraft. Safe flight, safe landing, and prompt evacuation of the rotorcraft, in the event of a minor crash landing, for any reason, are the objectives of the FAA/AUTHORITY evaluation of interiors and equipment unique to EMS.~~

~~(i) For example, a rotorcraft equipped only for transportation of a nonambulatory person (a police rotorcraft with one litter) as well as a rotorcraft equipped with multiple litters and complete life support systems and two or more trained attendants/medical personnel may be submitted for approval. These configurations will be evaluated to the airworthiness standards appropriate to the rotorcraft certification basis.~~

~~(ii) Normal category rotorcraft should comply with flightcrew and passenger safety standards which result in certain features of the basic certified rotorcraft which are related to the arrangement, to the doors and emergency exits, and to occupant protection. Compliance with the airworthiness standards results in placards or markings for doors and exits, exit size, exit quantity and location, exit access, safety belts, and possibly shoulder harnesses or other restraint or passenger protection means as a part of a rotorcraft type design. These features, including any placards and markings which are required to be a part of the rotorcraft type design, should be retained unless specific replacements or alternate designs are necessary for the EMS configuration to comply with the airworthiness standards.~~

~~(2) Many EMS configurations of normal rotorcraft are equipped with the following:~~

~~(i) Attendant/medical personnel seats, which may swivel.~~

~~(ii) Multiple litters, some of which tilt.~~

~~(iii) Medical equipment stowage compartments.~~

~~(iv) Life support and other complex medical equipment.~~

~~(v) Incubators for infants.~~

~~(vi) Curtains or other interior light shielding for the flightcrew station.~~

~~(vii) External loud speakers and search lights.~~

~~(viii) Special internal (intercom) and external communication radio equipment.~~

~~b. Procedures.~~

~~(1) General.~~

~~(i) Original type design information and criteria may or may not be available from the manufacturer. This may be "public," not proprietary, information that is pertinent for interior modifications. It may be appropriate to include "standard" features, placards, and markings for the rotorcraft type design by reference in the applicant's modification design data.~~

~~(ii) The EMS modification presented for approval usually contains equipment of one manufacturer's model or design. The type design of the modification will have features to power and restrain the equipment, maintain the rotorcraft systems integrity, and to otherwise protect the occupants. See paragraph b(15) which refers to equipment substitution.~~

~~(2) Evacuation and Interior Arrangements. Access to the emergency exits/doors from any location in the cabin/compartment, access to and use of the exit/door opening means or release device, and the unobstructed area of an exit are potential problems that should be addressed in the early design stage. Multi-litter arrangements may be especially critical for normal category rotorcraft.~~

~~(i) The operation or use of devices for locking the position of swivel seats, etc., and for rapid installation and removal of litters (incubators, etc.) should be labeled unless they are simple and obvious, and do not require exceptional effort. The design features of the device(s) and the seat and/or litter will influence the extent of information in any label necessary to insure proper and safe installation for routine use and for prompt evacuation when appropriate or necessary for the interior arrangement.~~

~~The requirement for labels or markings (instructions, etc.) that applies to operation of seat or litter features, release devices, etc., is not relieved even if trained attendants are necessary for an evacuation as discussed in c(2)(v). Placards or instruction cards that contain evacuation procedures do not necessarily contain detail procedures for individual seats, litters, and so forth. Release devices that are simple and obvious and do not require exceptional effort are recommended. For example, a single central control for litter release would be preferred over multiple action release devices. Seats and litters which require multiple actions or steps to position or release for an emergency evacuation after minor crash landing may be acceptable if properly scrutinized and evaluated for the effect on achieving a rapid evacuation.~~

~~(ii) The passenger compartment should not be partitioned to impede access to exits. Exit/doors should be readily accessible. A door or exit is required on each side of the rotorcraft. A demonstration or a "walk-through" of appropriate evacuation procedures may be necessary to insure the means and procedures are feasible and adequate. Rotorcraft with readily accessible exits, using simple and obvious means and procedures for an evacuation, may not require written procedures or a demonstration. Placards and durable markings, if necessary, may be sufficient to complement the exit markings and instructions required by the standards.~~

~~(iii) It is preferable for the patient to remain strapped in the litter; however, the patient may be removed from the litter to facilitate prompt evacuation in the event of a minor crash landing as defined in § 27.561(b). If evacuation procedures and trained attendants are necessary for rapid evacuation, the procedures may be prominently displayed in durable markings, placards, cards, and summarized or condensed in the Emergency Procedures Section of the Rotorcraft Flight Manual (RFM) or an EMS configuration supplement to the RFM. If medical attendants are required for evacuation, the attendants should be trained in evacuation procedures and listed as trained attendants in the Limitations Section of the RFM or supplement. A trained attendant is not considered a flightcrew member but is a required "crewmember."~~

~~(3) Restraint of Occupants and Equipment.~~

~~(i) The minor crash conditions specified in § 27.561(c) usually dictate all but the vertical (down and possibly up) design load conditions. The flight and landing loads, such as ±3.5g limit (flight) vertical, usually override the minor crash loads. See paragraphs AC 27.561 and AC 27.785 for further information.~~

~~(ii) Galleys, medical supplies, and equipment compartments or modules should be restrained and the individual compartments should also contain the contents therein for the conditions noted in b(3)(i). Durable placards, decals, or markings should be used where appropriate to limit the maximum weight of any compartment and the whole module. Compartment latches having sufficient strength and displacement/engagement should be used to contain the contents for the conditions noted. If necessary, a static load test or analysis should be employed to insure the container/compartment remains intact and the latch does not disengage for the most~~

~~critical conditions. Loose or unrestrained contents in an individual compartment, in combination with similar compartments, should require use of a magnification factor with the design conditions noted. Prudent design and location of compartments having heavy, unrestrained (loose) equipment will mitigate the potential effects of minor crash impact loads.~~

~~(iii) Whether seated or recumbent, the occupants must be protected as prescribed in § 27.785. Swivel seats and tilt litters may be used provided they are substantiated for the appropriate loads for the positions selected for approval. Placards or markings may be used to assure proper orientation for flight takeoff and landing and minor crash conditions. For recumbent occupants, harnesses, straps, a padded headboard, a diaphragm, or safety belts may be used if proven for the forward and lateral loads of §27.561(c). Harnesses/straps are preferred, however, for the forward condition. When harnesses/straps are used, they should prevent the occupant from significant forward motion (4g condition) that would remove the support for the head as well as the shoulder for "head-down" motion. The litter design should become a part of the interior design approval. The type design for the interior should include the litter and incubator part numbers. Infants in incubators should be similarly protected by padding and containment within the incubator with the incubator restrained for the load cases noted. If the infant is strapped to a removable platform, the platform and infant should be properly restrained within the incubator for the load cases noted. Incubator materials are also subject to the flammability standards noted in paragraph b(4) that follows.~~

~~(4) Flammability Standards for Materials.~~

~~(i) Interior materials must meet the flammability standards in § 27.853, appropriate to the type design. The standard presently requires compartment materials to be at least flash resistant. The wall and ceiling linings, coverings of upholstery, floors and furnishings must be at least flame resistant.~~

~~(A) Flash-resistant material may be characterized as that not exceeding a 20-inch-per-minute (horizontal) burn rate. See AC 23-2 for further information.~~

~~(B) Flame-resistant material may be characterized as that not exceeding a 4-inch-per-minute (horizontal) burn rate.~~

~~(C) However, self-extinguishing materials that can meet the transport rotorcraft standards of § 29.853 of Amendment 29-17 are readily available. These self-extinguishing materials are recommended for use in normal category rotorcraft.~~

~~(ii) For incubators, transparencies must be flash resistant and fabric (padding, covers) straps, etc., must be flame resistant according to the standard. Advisory Circular No. 23-2, Flammability Tests, dated August 20, 1984, contains test information about flash and flame-resistant material.~~

~~(5) Exit Signs/Markings and External Markings. Doors and exits must have signs and markings (instructions) for prompt evacuation even in darkness. An emergency light system is not required by Part 27. Refer to the RFM or maintenance manual for "standards" placards, decals, stencils, etc. Alternates may be approved as a part of the interior type design.~~

~~(6) Interior or "Medical" Lights. The view of the flightcrew must be free from glare and reflections that could cause interference. Curtains that meet the flammability standards (flame resistant) may be used. Complete partitioning or separation of the flightcrew and passenger area is not prudent. Means for visual and oral communication are usually necessary. Reference paragraph AC 27.773 concerning pilot visibility (§ 27.773).~~

~~(7) External Devices.~~

~~(i) Search lights, loud speakers, baggage pods, etc., may be installed on the underside of or elsewhere on the rotorcraft. The strength of the attachments must be proven for the flight and landing conditions and possibly for the minor crash conditions where applicable. Pilot view/visibility should not be adversely affected by the lights and reflections from the lights.~~

~~(ii) The device or pod located on the underside of the rotorcraft should not contact a level landing surface after "limit landing load" deflection of the landing gear. That is, the landing gear should deflect under limit load without causing damage to the device. For example, if the gear limit landing load deflection is 8 inches, the device must have at least an 8-inch ground clearance to avoid contact with the landing surface.~~

~~(iii) The physical characteristics of the rotorcraft landing gear design dictate the necessary clearance. The type design owner has this proprietary design information. A conservative deflection value may be chosen in place of obtaining proprietary design information. (The limit landing descent velocity specified in § 27.725(a) ranges from 6.5 to 8.3 feet per second.)~~

~~(iv) The device should also be designed and located to preclude penetration into a critical area of the fuselage such as fuel cell, fuel line, primary control tube, or occupant seat in the event of higher landing impact velocities.~~

~~(v) A flight evaluation is necessary to determine the effects of the device on the rotorcraft flight characteristics and on flight crew visibility. In addition, recent service history has shown that external equipment and external fixture modifications can affect main rotor mast bending loads. In lieu of a mast bending survey, a pre and post modification flight test may be conducted at identical weights, center-of-gravity (CG), power, and density altitude to compare a critical control position parameter (typically longitudinal cyclic stick position) at pre and post modification V_{ne} airspeeds.~~

~~(A) If required, the post modification V_{ne} should be reduced so that the post modification longitudinal cyclic stick position is slightly aft of (or less than) the pre modification stick position. This alternative procedure assumes that the static longitudinal stability of the helicopter has not been altered by the modification. For helicopters with neutral static stability, a more comprehensive investigation may be required.~~

~~(B) In some cases, a control position parameter other than longitudinal stick position may be critical. For example, a heavy external device mounted to the side of the helicopter that gives a lateral CG close to the limit and an asymmetric yaw component would require pre and post modification lateral cyclic stick and pedal position measurements. Operating limitations other than V_{ne} may need to be established, or reduced from pre modification limitations, to ensure pre modification mast bending is not exceeded.~~

~~(8) Patient Interference. When passengers or patients are located in close proximity to the pilot and the primary flight controls of the rotorcraft, a guard or shield must be installed or the patient must be restrained to prevent inadvertent or potential convulsive interference with safe operation of the rotorcraft. The guard may be a part of the rotorcraft interior features. In addition, prompt evacuation must be assured if a guard is used.~~

~~(9) Miscellaneous. Several paragraphs in this AC contain guidance for the standards cited in the reference list (reference c(1)). These paragraphs should provide insight into designing an EMS configuration that would be acceptable under the standards.~~

~~(10) Oxygen. EMS oxygen installations are supplied by either liquid or gaseous oxygen. Both types of systems are discussed in this paragraph.~~

~~(i) Liquid Oxygen.~~

~~(A) System General Description. This section covers specific requirements for liquid oxygen systems. Most liquid oxygen systems in use are installed in military aircraft and, as a result, much of this material is based on experience with these systems. A rotorcraft liquid oxygen system should be comprised of a liquid oxygen converter, tubing, fittings, quantity gage, heat exchangers, and appropriate pressure and flow control components as shown in figures AC 27 MG 6-1 and AC 27 MG 6-2. The installation may provide for replenishing the liquid oxygen supply by use of a quick-removable converter or, in the case of a fixed installation converter, by providing external access for connection to a portable service trailer. More complicated systems such as those with multiple converter assemblies are not discussed here since installation of those systems are not envisioned in rotorcraft at this time.~~

~~(B) System Components. All components should be aircraft qualified and suitable for use in an EMS rotorcraft application.~~

~~(1) Liquid Oxygen Converter. A liquid oxygen converter assembly is a self-powered system for the storage of liquid oxygen and for its conversion to gaseous oxygen when required. A principal part of the converter assembly is a vacuum insulated container. Pressure relief valves should be provided to allow the escape of gas generated when oxygen is not being expended in the supply line. Oxygen losses from a converter assembly vary from 5 to 20 percent per 24 hours depending on the size of the container, its installation environment, and so forth. Aircraft qualified and approved converters suitable for EMS rotorcraft use are available in either 5- or 50-liter capacities. Size selection should be determined by flow rate and duration requirements. Performance characteristics of each converter size are available from the manufacturer.~~

~~(2) Shutoff Valve Assembly. This valve should be accessible to a flightcrew member and be mounted in the supply line on or as close as possible to the outlet of the converter. This valve provides for the confinement of the remaining supply of liquid oxygen to the converter in the event of an emergency. Since the system pressure is low, the use of an electrically actuated shutoff valve is satisfactory to accomplish this function. In some installations, where the evaporating coil is immediately adjacent to the converter, a flow fuse has been used to accomplish this function. Use of a flow fuse must be supported by a system fault analysis and testing to show maximum normal flow will not result in nuisance trips, and reliable trips will be provided for malfunction conditions resulting in excess flow.~~

~~(3) Filler Valve. Some designs combine this function with the build-up and vent valve assembly as shown in figure AC 27 MG 6-2.~~

~~(4) Build-up and Vent Valve Assembly. This valve is positioned in the "vent" position when the system is being filled with oxygen and in the "build-up position at other times. Some designs combine this function with the filler valve as shown in figure AC 27 MG 6-2.~~

~~(5) Pressure Build-up Coil Assembly and Pressure Closing Valve. With the build-up and vent valve in the "build-up" position gas that is formed is allowed to apply pressure to the liquid to provide adequate flow through the check valve to the evaporating coil assembly. A connection to a pressure relief valve is also provided.~~

~~(6) Evaporating Coil Assembly. This is provided to convert the liquid oxygen into a gaseous form. The evaporating coil assembly should be of sufficient capacity to maintain the design flow quantity to the dispensing regulators at a temperature within +10 and -20° F of cabin ambient temperature. MIL-D-19326G contains a discussion of installation considerations for this unit.~~

(7) Vent Line. Gaseous oxygen escapes through this line. At the conclusion of the fill operation, liquid oxygen will flow overboard in a steady stream from this line to indicate the container is full of liquid oxygen. The vent line should be located to drain overboard at the bottom of the rotorcraft fuselage. Flow from the overboard vent should be directed so as not to create a hazard for personnel and not allow liquid oxygen to impinge on the rotorcraft. The vent lines should be insulated to prevent frosting and sweating if they pass over equipment which will be harmed by water dripping from the lines, or drip pans should be installed under the lines. There should be no hydrocarbon fills or drains, forward or above, in proximity to the vent outlet.

(8) Regulator. A regulator should be installed in the supply line downstream from the heat exchanger. The regulator should reduce the liquid oxygen converter operating pressure to a supply pressure of 50 pounds per square inch gauge (PSIG) to be compatible with the normal operating pressure of medical oxygen equipment.

(9) Flow Control Valve. This valve provides a calibrated flow of gaseous oxygen from an operating supply of 50 ± 5 PSIG. A valve whose proof pressure is specified at 80 PSIG and has a burst pressure rating of 350 PSIG would be considered satisfactory.

(10) Check Valve. This valve prevents gaseous oxygen in the supply system from backing up into the liquid oxygen in the container and increasing the vaporization rate of the liquid oxygen by exposure to the gas. This valve is normally an integral part of the liquid oxygen converter assembly.

(11) Quantity Indicators. A quantity indicator should be installed at the appropriate rotorcraft crew station to permit monitoring of the liquid oxygen supply. The indicator when installed in the rotorcraft should indicate the amount of liquid oxygen in the converter. Adequate clearance should be provided for the indicator connectors so that they can be readily disconnected by servicing personnel. Provisions should be made for the storage of the rotorcraft connectors to the liquid oxygen converter when they are disconnected. Liquid oxygen quantity indicating equipment is available in three types: capacitance gauging, electro-mechanical transducer indication, and differential pressure type indication.

(12) Pressure Relief Valves. Pressure relief valves are provided to vent overboard through the overboard vent system any excess pressures developing within the system.

(13) Lines. Lines should be either solid tubing or flexible hoses. Examples of acceptable solid tubing are aluminum alloy conforming to AMS 4071 or corrosion resistant annealed steel (304) confirming to MIL-T-8506. Flexible hoses should be used for rotorcraft system connections to removable converters and to other applications where relative movement may occur. Flexible hoses should be wire-braid-covered bellows or wire-braid-covered tetrafluoroethylene. Flexible hose conforming to

~~MS90457 or MS24548 would be considered satisfactory. MS90457 hose is flexible to -297° F (-183° C), and MS24548 hose is flexible to -65° F (-54° C). Synthetic lines such as plastic, nylon, or rubber should not be used for lines subjected to continuous pressure, or for application where the line will not be visible. Lines that are not visible are those that are located behind liners or in the walls of the fuselage.~~

~~(14) Fittings. If in contact, dissimilar metals should be suitably protected against electrolytic corrosion. Line assemblies should be terminated with "B" nuts or a similar manufactured terminating connection. Universal adapters (AN 807) or friction nipples used in conjunction with hose clamps should be avoided for use in pressurized systems.~~

~~(15) Drain Valve. Systems that have permanently installed containers should include a drain valve located to allow for complete draining of the liquid oxygen container. An acceptable drain valve would be one in accordance with MK-V-25962 that is suitably capped. A cap in accordance with AN 929-5 with a permanently attached chain is a suitable cap.~~

~~(16) Low Pressure, Low Level Warning System. It is recommended that provisions be included in the system to alert the appropriate aircraft crew member that the level of the oxygen supply has reached some low level. It is recommended that low level be actuated when less than 10 percent of the full container capacity is available. If low system pressure is also monitored, the low pressure valve selected should be such that any drop in supply line pressure upon inhalation should not activate the low pressure warning function.~~

~~(C) Component Installation. The following are typical installation considerations that should be addressed when designing the oxygen system.~~

~~(1) Location. The oxygen equipment, lines, and fittings should be located as remotely as practicable from sources of flammable fluids, high heat and electrical items, fuel, oil, hydraulic fluid, batteries, exhaust stacks, manifolds, and so forth. Oxygen lines should not be grouped with lines carrying flammable fluids. If possible, converters should not be in line with the plane of rotation of a turbine. System components should not be installed in an environment that will exceed the temperature limit of the component, and no part of the system should be installed in an area that will exceed 350° F (176° C). To minimize loss due to heat, the liquid oxygen converter should not be located near equipment that dissipates a high quantity of heat.~~

~~(2) Converter Mounting. The oxygen container should be readily accessible to servicing personnel. If the container is not removable for servicing, the filler should be external to the aircraft with adequate contamination protection. Mounting provisions for the converter and plumbing to the evaporating coil assembly should include a drain pan with an overboard drain.~~

~~(3) Flexible Hoses. Hoses should be of sufficient length to provide unstressed connections and be protected against chafing on surfaces or objects which may damage the wire covering. The bend radius imposed on the hoses by the installation and during remove and replace actions should not be less than the minimum established by the hose specifications.~~

~~(4) Lubricants. No lubricants should be used on liquid oxygen pipe fittings. MIL-T-27730 Teflon tape may be used on male pipe fittings when required. Teflon tape should not be used on flared tube fittings, straight threads, coupling sleeves, or on the outer side of tube flares. None of the tape should be allowed to enter the inside of a fitting. Krytox fluorinated grease by E.I. Dupont De Nemours and Company, or an equivalent, may be used sparingly on seals.~~

~~(5) Tubing Routing and Mounting. There should be at least 2 inches of clearance between the oxygen system and flexible moving parts of the rotorcraft. There should be at least a ½-inch clearance between the oxygen system and rigid parts of the rotorcraft. The oxygen system tubing, fittings, and equipment should be separated at least 6 inches from all electrical wiring, heat conduits, and heat emitting equipment in the rotorcraft. Insulation should be provided on adjacent hot ducts, conduits, or equipment to prevent heating of the oxygen system. In routing the tubing, the general policy should be to keep total length to a minimum. Allow for expansion, contraction, vibration, and component replacement. All tubing should be mounted to prevent vibration and chafing. This should be accomplished by the proper use of rubberized or cushion clips installed at 24-inch intervals (copper) or 36-inch intervals (aluminum) and as close to the bends as possible. The tubing, where passing through or supported by the rotorcraft structure, should have adequate protection against chafing by the use of flexible grommets or clips. The tubing should not strike against the rotorcraft structure during vibration and shock encountered during normal use of the rotorcraft.~~

~~(6) System Marking. The rotorcraft should be permanently and legibly marked, as applicable, in the locations specified below (a minimum letter height of ¼ inch is recommended):~~

~~(i) Adjacent to the overboard vent opening:~~

~~CAUTION~~
~~LIQUID OXYGEN VENT~~

~~(ii) On outside surface of filler box cover plate:~~

~~LIQUID OXYGEN (BREATHING) FILL ACCESS~~

~~(iii) On underside surface of filler box cover plate:~~

~~CAUTION - KEEP CLEAN, DRY, AND FREE FROM OILS~~

~~(iv) In prominent place when filler box is open, preferably near liquid oxygen drain valve:~~

~~DO NOT OPEN DRAIN VALVE UNTIL DRAIN HOSE AND DRAIN TANK ARE CONNECTED~~

~~(v) Other placards, such as one at the converter cautioning about the presence of liquid oxygen, may also be appropriate.~~

~~(7) Other installation criteria are given in Chapter 6, AC 43.13-2A, Acceptable Methods, Techniques, and Practices-Aircraft Alterations, dated June 9, 1977, and should be given full consideration.~~

~~(D) Precautions. The referenced SAE report contains precautions peculiar to a liquid oxygen installation, and this material should be reviewed. It should also be emphasized that liquid oxygen equipment and the aircraft being serviced must be electrically grounded during servicing to prevent an accumulation of static electricity and discharge. The following considerations are included for special emphasis:~~

~~(1) System Cleanliness. The completed installation shall be free of oil, grease, fuels, water, dust, dirt, objectionable odors, or any other foreign matter, both internally and externally prior to introducing oxygen in the system.~~

~~(2) Closures. Lines which are required to be disconnected, due to the location of the converter within the rotorcraft during rotorcraft maintenance checks or overhaul, should be capped to prevent materials which are incompatible with oxygen from entering the system when the system integrity is broken. Caps which introduce moisture and tapes that leave adhesive deposits shall not be used for these purposes. All openings of lines and fittings shall be kept securely capped until closed within the installation.~~

~~(3) Degreasing. All components of the oxygen system should be procured for oxygen service use in an "oxygen clean" condition. Parts of the oxygen system, such as tubing, not specifically covered by cleaning procedures should be degreased using a vapor phase trichloroethane degreaser. Ultrasonics may be used in conjunction with vapor phase degreasing for the cleaning of components.~~

~~(4) Purging. The system should be purged with hot, dry 99.5 percent pure oxygen gas in accordance with the manufacturers recommendations after:~~

~~(i) Initial assembly of the oxygen system; and~~

~~(ii) After system closure whenever the oxygen system pressures have been depleted to zero, or the system has been left open to atmospheric conditions for a period of time or is opened for repairs.~~

~~(5) Maintenance and Replacement. All parts of the oxygen system should be installed to permit ready removal and replacement without the use of special tools. All tubing connections and fittings should be readily accessible for leak testing with a leak test compound formulated for leak testing oxygen systems and for tightening of fittings without removal of surrounding parts.~~

~~(ii) Gaseous Oxygen.~~

~~(A) General. This guidance is intended to supplement the existing guidance in AC 43.13-2A, Chapter 6. If there are any differences within the two AC's, this guidance should prevail since it pertains specifically to Part 27 requirements.~~

~~(B) System Components.~~

~~(1) High Pressure Cylinders. Many installations utilize hospital type cylinders rather than aviation type cylinders. A concern with the hospital type cylinders is the yoke and the hard plastic washer that is commonly used with these cylinders. It is very difficult to properly attach these yokes since the rotorcraft provides a high vibration environment and no positive lock is provided. Leaks are a continuous problem with this configuration. Yokes are available for these bottles that provide for a positive lock. Improved washers that provide for a good elastometric seal and include a metal ring to limit crushing the washer are also available. If the hospital type bottles are to be used, only the modified yokes and improved seals should be considered for future installations. The preferred cylinder is the aviation type cylinder with the integral shut-off valve and regulator. All cylinders should be DOT approved.~~

~~(2) Lines.~~

~~(i) General. Any lines that pass through potential fire zones should be stainless steel.~~

~~(ii) High Pressure. Use of high pressure lines may be necessitated by the use of a pressure regulator that is remote from the cylinder. The intent is to locate the regulator as close as physically possible to the cylinder, and to minimize the use of fittings. Lines of 6-inch lengths are encouraged with 18-inch lengths being the maximum in unusual circumstances. Lines made of stainless steel are recommended.~~

~~(iii) Low Pressure. Although lines may only be subjected to low pressures, if they are located behind upholstery or for any reason are not 100 percent visible during normal operation, they should be solid metal lines or high pressure flexible lines such as Aeroquip 300 series hose or Stratoflex 124 or 170 series hose assemblies. The so called "green lines" should only be used in locations that are 100 percent visible during normal operation. This would restrict their use to the run between the mask and the bulkhead disconnect in the aircraft cabin. Synthetic lines such as plastic, nylon, or rubber cannot be recommended for applications that will be~~

~~exposed to continuous pressure (i.e., as opposed to pressurized when needed). These materials can cold flow.~~

~~(3) Fittings.~~

~~(i) High Pressure. Intercylinder connections are made with regular flared or flareless tube fittings with stainless steel. Usually fittings are of the same material as the lines. Mild steel or aluminum alloy fittings with stainless steel lines are discouraged. Titanium fittings should never be used because of a possible chemical reaction and resulting fire. An example of a series of fittings that has been accepted is the "SS" series Swagelok tube fittings (flareless).~~

~~(ii) Low Pressure. Fittings for metallic low pressure lines are flared or flareless, similar to high pressure lines. Line assemblies should be terminated with "B" nuts in a similar manner to a manufactured terminating connection. Universal adapters (AN 807) or friction nipples used in conjunction with hose clamps are not accepted for use in pressurized oxygen systems.~~

~~(4) Shut-off Valve. Each system should contain a shutoff valve that is located as close as practical to the high pressure cylinder(s), and it should be assessable to a flightcrew member. High pressure cylinders should use slow opening/closing system shut-off valves. Where the regulator is part of the cylinder, and low pressure oxygen is controlled, the emphasis on slow acting valves is not as significant, and use of a flow fuse may be possible. Use of a flow fuse must be supported by a system fault analysis and testing to show maximum flow will not result in nuisance trips, and reliable trips will be provided for malfunction conditions resulting in excess flow.~~

~~(5) Regulators. The regulator should be mounted as close as possible to the cylinders (reference b(9)(ii)(B)(2)(i)). If nonaviation qualified regulators are to be considered, their service history should be reviewed and careful consideration should be given to the manufacturer's environmental qualification. Radio Technical Commission for Aeronautics Document D0-160 is a recognized and accepted standard for environmental considerations. As a minimum, consideration should be given to operation during altitude, temperature, and vibration extremes.~~

~~(6) Placards. Appropriate, durable placards should be provided with the installed system. Emphasis should be placed on any precautions that are appropriate during filling of the system and so forth.~~

~~(7) Filler Connections. When a filler connection is provided, it is recommended it be located outside the fuselage skin or isolated in a manner that would prevent leaking oxygen from entering the rotorcraft. Careful evaluation should also be made of any nearby sources of fuel, oil, or hydraulic fluid under normal or malfunction conditions. Each filler connection should be placarded. In addition, any valve (on~~

~~aircraft or ground servicing equipment) associated with high pressure should be slow acting.~~

~~(C) "Provisions Only" Considerations. In some instances systems are approved that only include provisions for a supply system consisting of the high pressure cylinders, regulators, and their associated lines and fittings. In these instances, a placard should be provided that refers to a supply system that is considered satisfactory for the remainder of the installation. Other supply system configurations may very well be acceptable; however, they should be evaluated by the ACO that evaluated the original installation. An example of an acceptable placard for this situation is:~~

> ~~Oxygen Supply System must be in accordance with the requirements given in STC SH _____. Deviations to the configuration specified must be evaluated and approved by the Manager (include reference to the appropriate FAA ACO).~~

~~(11) Medical Communication Equipment. This equipment is provided to allow for communication between the rotorcraft and ground medical personnel. It includes voice communication and may also include telemetry equipment for the transmission of graphic data. It should be demonstrated that this equipment functions, and the range at which this determination was made should be recorded in the project file. The functional demonstration should include a 360° turn (clockwise and counterclockwise) to assure no significant sections of signal blanking exists. The remainder of the emphasis on this equipment should be to assure that operation of this equipment does not interfere with normal operation of any avionic systems whose installation is required for safe operation of the rotorcraft.~~

~~(12) Cabin Lighting. EMS interiors normally include higher intensity cabin lighting than other interiors. This lighting capability should be carefully evaluated to ensure it does not interfere with operation of the rotorcraft. In some installations a special curtain is required to separate the cockpit from any interference by the lighting. The FAA/AUTHORITY project file should include a short discussion of how this evaluation was conducted. See paragraph b(6) for other curtain considerations.~~

~~(13) Other EMS Equipment. These items of equipment that are installed for the EMS mission are considered to be optional equipment and should be operated to assure they function properly. This evaluation would normally be done by someone that is knowledgeable about the particular type of equipment since correct operation of the equipment is essential to a valid determination that the required rotorcraft systems are not being interfered with. This includes all removable pieces of medical equipment that are used for patient care. The primary purpose of the evaluation of this equipment is to emphasize the possibility of any adverse interference between operation of the EMS equipment and the systems whose installation is required for safe operation of the aircraft, the adequacy of the installation provisions, and assurance that failure modes will not result in a hazardous condition for the rotorcraft.~~

~~(14) Miscellaneous. The following areas are not peculiar to EMS installations; however, their significance is enhanced by the complexity of an EMS installation.~~

~~(i) Compatibility. Many EMS installations are a collection of several STC's and may also include some "FAA/AUTHORITY field approvals." For this situation it should be shown that the overall installation provides for safe operation of the aircraft. Operation of a search light, if included, should be emphasized since this system can be difficult to keep out of the cockpit.~~

~~(ii) Electrical Load Analysis. An electrical load analysis should be conducted, and additional guidance is available in paragraph AC 27 MG 1. If the analysis indicates the generator(s) can be overloaded, appropriate measures should be taken to account for the problem. In some instances a placard that specifies certain operating limitations may be satisfactory while in other instances an electrical interlock may be in order. In general, if the amount of overload is relatively small, the placard solution will probably be satisfactory; whereas, if the amount of possible overload is significant, it is more likely that an interlock scheme will be necessary.~~

~~(iii) Aircraft Grounding. It should be emphasized in an appropriate place in the STC data (RFM, maintenance information, etc.) that any time the EMS systems are being operated or serviced (oxygen for example) on the ground, the rotorcraft itself must be grounded.~~

~~(iv) Electrical Outlets. All electrical outlets provided in the cabin should be the three-prong grounded type. When not in use, these outlets should be suitably protected against the entry of fluids.~~

~~(v) Placards. All medical outlets should be placarded (air, oxygen, vacuum, etc.). Electrical power outlets should be placarded for type of voltage and amperage capacity. A placard stating no smoking when oxygen is in use should be included. Other placards would include information appropriate to the oxygen system, operation of special controls, and so forth.~~

~~(vi) Equipment in Cargo and Baggage Compartments. When components are added to the baggage compartments, provisions should be made to protect the system components due to shifting cargo. In addition, when oxygen components are installed, the compartment should be placarded against the storage of oil or hydrocarbons. A smoke detector is recommended for a compartment if oxygen cylinders are installed in a closed, nonaccessible compartment. Also, the cargo weight limitations placard should be changed. Paragraph AC 27.787 pertains to cargo and baggage compartments.~~

~~(15) Equipment Substitution. The EMS modification that is presented for approval will contain specific items of equipment, and the approval will make reference to this equipment. If other equipment (new model, manufacturer, etc.) is to be~~

~~substituted, then an evaluation should be made to assure the substitute equipment is also satisfactory. This evaluation would normally consist of comparing the attachment means, design features, failure modes, specifications, and operation of the two units. The purpose of the evaluation is to assure there are not differences that have an adverse effect on the airworthiness of the installation. Other differences would not be considered significant. Specific seats and litters are generally approved as a part of the EMS configuration. Substitution may be approved in accordance with the standards.~~

~~c. Related FAR Sections and References.~~

~~(1) FAR Sections. § 27.337, 27.471, 27.561, 27.773, 27.783, 27.785, 27.807, 27.831, 27.853, 27.1301, 27.1309, 27.1353, 27.1357, 27.1365, 27.1367, 27.1411, 27.1413, 27.1431, 27.1557(d), 27.1561, 27.1581(a)(2), 27.1583(d), 27.1585, and 27.1589.~~

~~(2) Other References.~~

~~(i) Helicopter Association International, Emergency Medical Services Recommended Guidelines, 1987, First Revision, 2 pages.~~

~~(ii) National Highway Traffic Safety Administration, Air Ambulance Guidelines, dated 1981.~~

~~(iii) FAR Part 91, General Operating and Flight Rules.~~

~~(iv) FAR Part 135, Air Taxi Operators and Commercial Operators.~~

~~(v) AC 67-1, Medical Information for Air Ambulance Operators, dated March 4, 1974.~~

~~(vi) AC 23-2, Flammability Tests, dated August 20, 1984.~~

~~(vii) Oxygen Equipment for Aircraft, Society of Automotive Engineers Aerospace Information Report No. 825B, Rev. 9/86.~~

~~(viii) Acceptable Methods, Techniques, and Practices--Aircraft Alterations, AC 43.13-2A, dated June 9, 1977.~~

~~(ix) Design and Installation of Liquid Oxygen Systems in Aircraft, General Specification for Military Specification MIL-D-19326G, dated October 1, 1985.~~

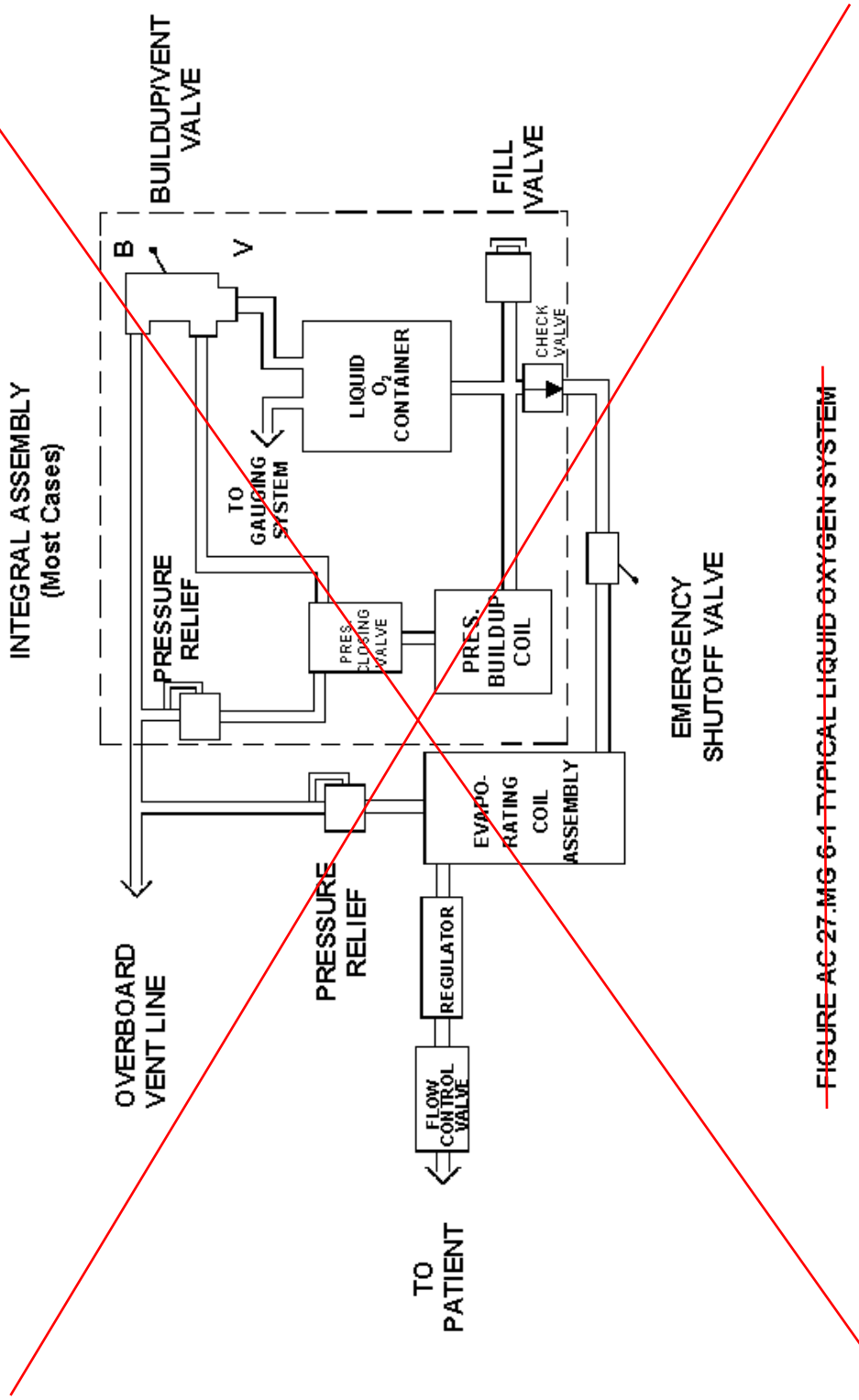

~~FIGURE AC 27-MG 6-1 TYPICAL LIQUID OXYGEN SYSTEM~~

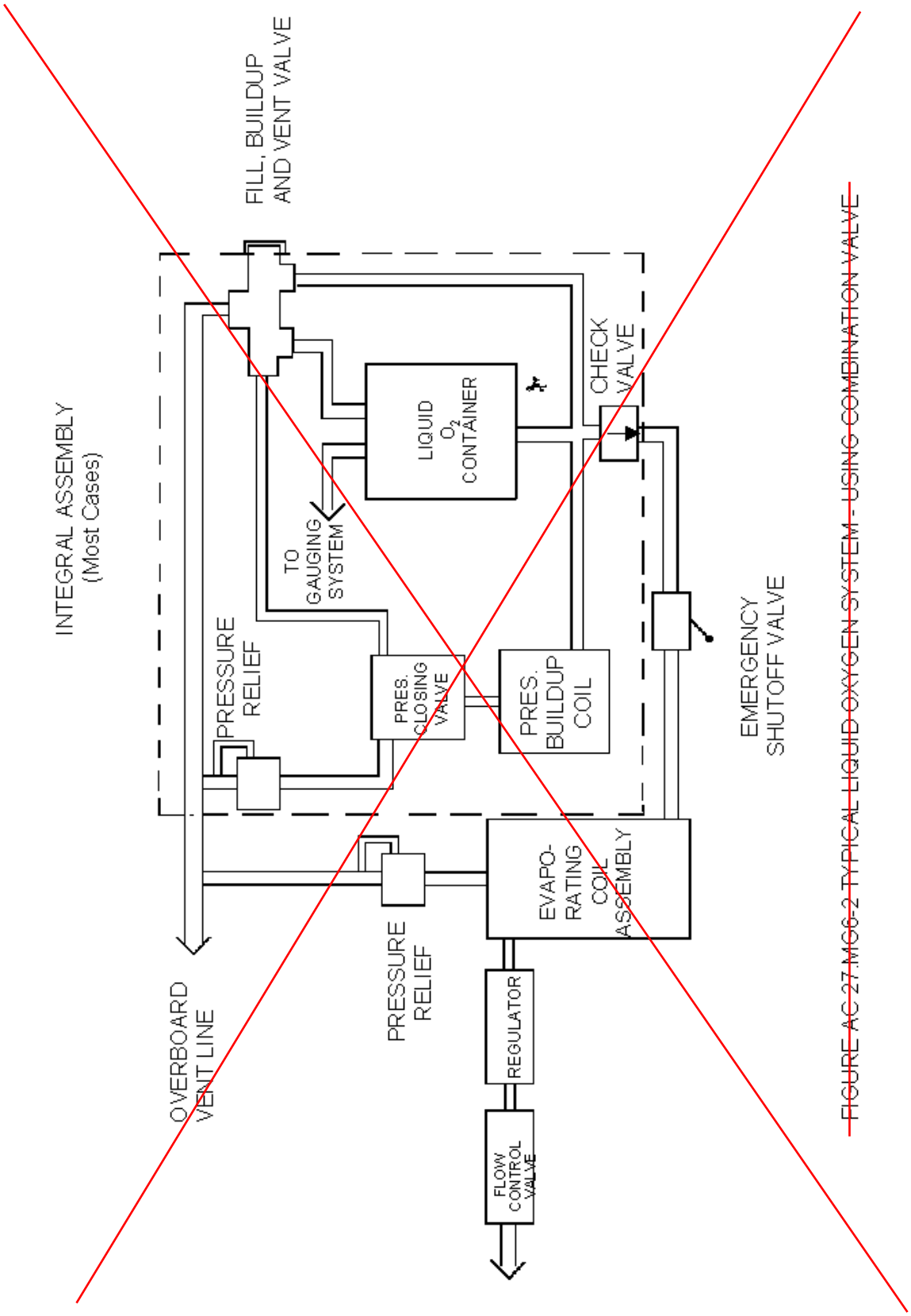

~~FIGURE AC 27.MG6-2 TYPICAL LIQUID OXYGEN SYSTEM - USING COMBINATION VALVE~~

CHAPTER 3
AIRWORTHINESS STANDARDS
NORMAL CATEGORY ROTORCRAFT

MISCELLANEOUS GUIDANCE (MG)

AC 27 MG 7. HOUR METERS OR TIME-IN-SERVICE RECORDING DEVICES IN ROTORCRAFT.

a. Explanation.

(1) Time in service is a required maintenance record according to § 91.173(a)(2)(i). Manual recording (rather than automatic) of the rotorcraft time in service is required whether or not the rotorcraft is equipped with a time accumulating device or hour meter. Time recording devices (hour meters) are optional and not required by the maintenance or operating rules or as a part of the aircraft type design.

(2) Time in service is defined in FAR Part 1 as follows: "...with respect to maintenance time records, means the time from the moment an aircraft leaves the surface of the earth until it touches it at the next point of landing."

(3) The allowable total time in service, that is, service life or retirement time, has been typically specified for critical rotorcraft components that were subject to fatigue. The life was determined under § 27.571 or its predecessor standards.

(4) Hour meters may be mechanical and a part of a recording tachometer. They may be electrical and activated by the main battery switch, engine oil pressure, or some other source. These devices may not record "real time" when an engine or rotor is at idle speed or when deactivated by an oil pressure sensor switch. This real time omission is not considered significant in the life of a rotorcraft if the design and installation of the sensor minimizes this omission. However, for an individual aircraft that is used extensively, the omission of real time may become significant, and the time in service should be adjusted prior to recording the time in service in the aircraft records.

b. Procedures.

(1) Time in service must be recorded in the aircraft maintenance records.

(2) Hour meters are used to accumulate operating time. The meters may be activated by various sensors/switches. The type design data should include hour meter installation data including the sensor/switch location and any adjustment or "rigging" information to ensure proper installation.

(3) One acceptable installation of a sensor/switch would activate the hour meter whenever the collective pitch control was moved from the lowest pitch stop position.

That is, real time in service was recorded whenever the collective control was moved from the “full down” collective position.

(i) The location of the sensor is important to ensure time in service is measured when collective lift or thrust of the main rotor is desired.

(ii) Time in service will not be accumulated in flight whenever full down (or near full down) collective is used, such as in some phases of autorotation. However, collective controls are used to maintain proper rotor speed during autorotation.

(iii) Time in service should be corrected (increased) for individual aircraft whenever “full down” collective is used a significant amount.

(4) If the hour meter installation is significantly deficient in recording real time in service, corrections must be made or the installation changed to eliminate any significant deficiency in the correct time in service.

CHAPTER 3
MISCELLANEOUS GUIDANCE (MG)

AC 27 MG 8. (Amendment 27-30) SUBSTANTIATION OF COMPOSITE ROTORCRAFT STRUCTURE

a. Reference. 14 CFR §§ 27.305, .307, .571, .603, .605, .609, .610, .611, .613, .629, .923, .927, .931, .1529 and Appendix A.

b. Purpose. These substantiation procedures provide a more specialized supplement to the general procedures outlined by AC 20-107A, "Composite Aircraft Structure." These procedures address substantiation requirements for composite material system constituents, composite material systems, and composite structures common to rotorcraft. A uniform approach to composite structural substantiation is desirable, but it is recognized that in a continually developing technical area which has diverse industrial roots, both in aerospace and in other industries, some variations and deviations from the procedures described herein will be both necessary and acceptable. Significant deviations from this material should be coordinated in advance with the FAA/AUTHORITY.

c. Special Considerations. Since rotorcraft structure is configured uniquely and is inherently subjected to severe cyclic stresses, special consideration is required for the substantiation of all rotorcraft structure, including composites. This special consideration is necessary to ensure that the level of safety intended by the current regulations is attained during the type certification process for all structure with special emphasis on composite structure because of its unique structural characteristics, manufacturing quality and operational considerations, and failure mechanisms.

d. Background.

(1) Historically, rotorcraft have required unique, conservative structural substantiation because of unique configuration effects, unique loading considerations, severe fatigue spectrum effects, and the specialized comprehensive fatigue testing required by these effects. Rotorcraft structural static strength substantiation for both metal and composite structure is essentially identical to that for fixed wing structure once basic loads have been determined. However, rotorcraft structural fatigue substantiation for composites is significantly different from fixed wing fatigue substantiation. Since AC 20-107A, as developed, applies to both fixed wing aircraft and rotorcraft; it, of necessity, was finalized in a broad generic form. Accordingly, a need to supplement AC 20-107A for rotorcraft was recognized during type certification programs. One significant difference in traditional rotorcraft fatigue substantiation programs and fixed wing fatigue programs is the use of multiple component fatigue tests for rotorcraft programs rather than just one full-scale test. Also, constant amplitude, accelerated load tests are typically used rather than spectrum tests because of the high frequency loads common to rotorcraft operations. These rotorcraft fatigue tests have

traditionally involved the generation of stress versus life or cycle (S-N) curves for each critical part (most of which are subjected to the cyclic loading of the main or tail rotor system) using a monotonic (sinusoidal) fatigue spectrum based on maximum and minimum service stress values. Unless configuration differences or flight usage data dictate otherwise, the monotonic fatigue spectrum's period is typically based on six ground-air-ground (GAG) cycles for each flight hour of operation. The S-N curves for the substantiation of each detailed part are typically generated by plotting a curved line through three data points (reference AC 27-1B, Chg 1, MG 11, "Fatigue Evaluation of Rotorcraft Structure"). The three data points selected are a short specimen life (low-cycle fatigue), an intermediate specimen life, and a long specimen life (high-cycle fatigue). Each raw data point is generated by monotonically fatigue testing at least two full-scale specimens (parts) to failure or run out for each data point on the S-N curve. The raw data point values are then reduced by an acceptable statistical method to a single value for plotting to ensure proper reliability of the associated S-N curve. Order 8110.9, "Handbook on Vibration Substantiation and Fatigue Evaluation of Helicopter and Other Power Transmission Systems" and AC 27-1B, Chg 1, MG 11, "Fatigue Evaluation of Rotorcraft Structure," contain comprehensive discussions of the S-N curve generation process. The rotorcraft S-N curve process contrasts sharply with the fixed wing process of using a single full-scale fatigue article (usually an entire wing or airframe, which constitutes a single full-scale assembly data point), generic material or full-scale assembly S-N data (e.g., MIL-HDBK-5 for metals, MIL-HDBK-17 for composites, or AFS-120-73-2 for full-scale assemblies), a non-monotonic spectrum and relatively large scatter factors to verify or determine the design fatigue life of the full-scale aeroplane.

(2) Also, rotorcraft have employed and mass-produced composite designs in primary structure (typically main and tail rotor blades) since the early 1950's. This was 10 or more years before composites were type certificated for primary fixed-wing structure in either military or civil aircraft applications (with some notable limited production exceptions, such as the Windecker fixed wing aircraft). In any case, the early 1950 period was well before a clear, detailed understanding of composite structural behavior (especially in the areas of macroscopic and microscopic failure mechanisms and modes) was relatively common and readily available in a usable format for the average engineer working in this field. It also predated the initial issuance of AC 20-107. Currently, much composite design information is proprietary, either to government, industry, or both, and many data gathering methods have not been completely standardized. Consequently, a significant variation from laboratory to laboratory in material property value determination methods and results can exist. The early rotor blade designs (as well as current designs) are by nature relatively low strain, tension structure designs. Also, by nature, these designs are not damage or flaw critical. Thus by circumstance as much as design, early composite rotor blade and other composite rotorcraft designs incorporated an acceptable fatigue tolerance level of safety. In the 1980's, more test data, analytical knowledge, and analytical methodology became available to more completely substantiate a composite design. Current 14 CFR Parts 27 and 29 contain many sections (reference paragraph a above) to be considered in substantiating composite rotorcraft structure, but this advisory material is needed to

supplement the general guidance of AC 20-107A by providing specific rotorcraft guidance for obtaining consistent compliance with 14 CFR sections applicable to rotorcraft.

e. Definitions. The following basic definitions are provided as a convenient reading reference. MIL-HDBK-17, and other sources, contain more complete glossaries of definitions.

(1) AUTOCLAVE. A closed apparatus usually equipped with variable conditions of vacuum, pressure and temperature. Used for bonding, compressing or curing materials.

(2) ALLOWABLES. Both A- basis and B- basis values statistically derived and used for a particular composite design.

(3) BALANCED LAMINATE. A composite laminate in which all laminae at angles other than 0° occur only in ± pairs (not necessarily adjacent).

(4) A-BASIS ALLOWABLE. The “A” mechanical property value is the value above which at least 99 percent of the population of values is expected to fall, with a confidence of 95 percent.

(5) B-BASIS ALLOWABLE. The “B” mechanical property value is the value above which at least 90 percent of the population of values is expected to fall, with a confidence of 95 percent.

(6) BOND. The adhesion of one surface to another, with or without the use of an adhesive as a bonding agent.

(7) COCURE. The process of curing several different materials in a single step. Examples include the curing of various compatible resin system pre-pregs, using the same cure cycle, to produce hybrid composite structure or the curing of compatible composite materials and structural adhesives, using the same cure cycle, to produce sandwich structure or skins with integrally molded fittings.

(8) CURE. To change the properties of a thermosetting resin irreversibly by chemical reaction; i.e., condensation, ring closure, or addition. Cure may be accomplished by addition of curing (crosslinking) agents, with or without catalyst, and with or without heat.

(9) DELAMINATION. The separation of the layers of material in a laminate.

(10) DISBOND. A lack of proper adhesion in a bonded joint. This may be local or may cover a majority of the bond area. It may occur at any time in the cure or subsequent life of the bond area and may arise from a wide variety of causes.

(11) FIBER. A single homogeneous strand of material, essentially one-dimensional in the macro-behavior sense, used as a principal constituent in advanced composites because of its high axial strength and modulus.

(12) FIBER VOLUME. The volume of fiber present in the composite. This is usually expressed as a percentage volume fraction or weight fraction of the composite.

(13) FILL. The 90° yarns in a fabric, also called the woof or weft.

(14) GLASS TRANSITION. The reversible change in an amorphous polymer or in amorphous regions of a partially crystalline polymer from (or to) a viscous or rubbery condition to (or from) a hard and relatively brittle one.

(15) GLASS TRANSITION TEMPERATURE. The approximate midpoint of the temperature range over which the glass transition takes place.

(16) HYBRID. Any mixture of fiber types (e.g., graphite and glass).

(17) IMPREGNATE. An application of resin onto fibers or fabrics by several processes: hot melt, solution coat, or hand lay-up.

(18) LAMINA. A single ply or layer in a laminate in which all fibers have the same fiber orientation.

(19) LAMINATE. A product made by bonding together two or more layers or laminae of material or materials.

(20) LOW STRAIN LEVEL. As used herein, is defined as a principal, elastic axial gross strain level, that for a given composite structure provides for no flaw growth and thus provides damage tolerance of the maximum defects allowed during the certification process using the approved design fatigue spectrum.

(21) MATERIAL SYSTEM CONSTITUENT. A single constituent (ingredient) chosen for a material system (e.g., a fiber, a resin).

(22) MATERIAL SYSTEM. The combination of single constituents chosen (e.g., fiber and resin).

(23) MATRIX. The essentially homogeneous material in which the fibers or filaments of a composite are embedded. The resins used in most aircraft structure are thermoset polymers.

(24) MAXIMUM STRUCTURAL TEMPERATURE. The temperature of a part, panel, or structural element due to service parameters such as incident heat fluxes, temperature, and air flow at the time of occurrence of any critical load case, (i.e., each

critical load case has an associated maximum structural temperature). This term is synonymous with the term “maximum panel temperature.”

(25) POROSITY. A condition of trapped pockets of air, gas, or void within a solid material, usually expressed as a percentage of the total nonsolid volume to the total volume (solid + nonsolid) of a unit quantity of material.

(26) PRE-PREG, PREIMPREGNATED. A combination of mat, fabric, nonwoven material, tape, or roving already impregnated with resin, usually partially cured, and ready for manufacturing use in a final product that will involve complete curing. Pre-preg is usually drapable, tacky, and can be easily handled.

(27) RESIN. An organic material with indefinite and usually high molecular weight and no sharp melting point.

(28) RESIN CONTENT. The amount of matrix present in a composite either by percent weight or percent volume.

(29) SECONDARY BONDING. The joining together, by the process of adhesive bonding, of two or more already-cured composite parts, during which the only chemical or thermal reaction occurring is the curing of the adhesive itself. The joining together of one already-cured composite part to an uncured composite part, through the curing of the resin of the uncured part, is also considered for the purposes of this advisory circular to be a secondary bonding operation. (See COCURING).

(30) SHELF LIFE. The lengths of time a material, substance, product, or reagent can be stored under specified environmental conditions and continue to meet all applicable specification requirements and/or remain suitable for its intended function.

(31) STRAIN LEVEL. As used herein, is defined as the principal axial gross strain of a part or component due to the principal load or combinations of loads applied by a critical load case considered in the structural analysis (e.g., tension, bending, bending-tension, etc.). Strain level is generally measured in thousandths of an inch per unit inch of part or micro inches/per inch (e.g., .003 in/in equals 3000 micro inches/inch).

(32) SYMMETRICAL LAMINATE. A composite laminate in which the ply orientation is symmetrical about the laminate midplane.

(33) TAPE. Hot melt impregnated fibers forming unidirectional pre-preg.

(34) THERMOPLASTIC. A plastic that repeatedly can be softened by heating and hardened by cooling through a temperature range characteristic of the plastic, and when in the softened stage, can be shaped by flow into articles by molding or extrusion.

(35) THERMOSET (OR CHEMSET). A plastic that once set or molded cannot be re-set or remolded because it undergoes a chemical change; (i.e., it is substantially infusible and insoluble after having been cured by heat or other means.

(36) WARP. Yarns extended along the length of the fabric (in the 0° direction) and being crossed by the fill yarns (90° fibers).

(37) WORK LIFE. The period during which a compound, after mixing with a catalyst, solvent, or other compounding constituents, remains suitable for its intended use.

(38) CATASTROPHIC FAILURE. Any structural failure, which results in death, severe injury, or loss of the aircraft.

(39) FATIGUE TOLERANCE. The capability of structure to continue functioning without catastrophic failure after being subjected to fatigue (repeated) loads expected during operation of the rotorcraft. Fatigue tolerance should be achieved by flaw tolerance design, or if impractical, safe-life design, or a combination.

(40) SAFE-LIFE. The capability of as-manufactured structure as shown by tests, or analysis based on tests, not to initiate fatigue cracks during the service life of the rotorcraft or before an established replacement time.

(41) FLAW TOLERANCE. The capability of rotorcraft structure to achieve fatigue tolerance accounting for the presence of flaws and damage that may occur in manufacturing and service use. Flaw tolerance can be achieved by either flaw tolerance safe-life or fail-safe designs. The term “Damage Tolerance” is frequently used to describe the ability of a structure to tolerate the effects of flaws and damage; however, the terminology of § 27.571, Amendment 26, is used in this AC to maintain consistency.

(42) FLAW TOLERANT SAFE-LIFE. The capability of as-manufactured structure, with expected flaws, as shown by tests or analysis based on tests, not to initiate fatigue cracks or flaw/damage growth during the service life of the rotorcraft or before an established replacement time.

(43) FAIL-SAFE. The capability of structure remaining after a partial failure to withstand design limit loads without catastrophic failure within an inspection period.

(44) MULTIPLE LOAD PATH. Structure providing two or more separate and distinct paths of structure that will carry limit load after complete failure of one of the members.

(45) ACTIVE MULTIPLE LOAD PATH. Structure providing two or more load paths that are all loaded during operation to a similar load spectrum.

(46) PASSIVE MULTIPLE LOAD PATH. Structure providing load paths with one or more of the members (or areas of a member) relatively unloaded until failure of the other member or members.

(47) ACCIDENTAL DAMAGE FLAWS. Discrete damage that may occur in service use or in manufacturing due to impacts or collisions, such as dents, scratches, gouges, abrasions, disbonds, splintering, and delaminations.

(48) MANUFACTURING-RELATED FLAWS. Intrinsic imperfections related to manufacturing operations, processing, or assembly such as voids, gaps, porosity, inclusions, fiber dislocation, disbonds, and delaminations.

(49) FATIGUE/ENVIRONMENTAL FLAWS. Structural damage related to fatigue or environmental effects such as delaminations, disbonds, splintering, or cracking.

(50) DESIGN LIMIT LOADS. The maximum loads to be expected in service, as defined by § 27.301(a).

(51) AS-MANUFACTURED. Product or component that has passed the applicable quality control process and has been found to conform to the approved design within the allowable tolerances.

(52) RESIDUAL STRENGTH. The strength retained for some period of unrepaired use after a failure or partial failure due to fatigue or accidental or discrete source of damage.

(53) PRINCIPAL STRUCTURAL ELEMENT (PSE). A structural element that contributes significantly to the carrying of flight or ground loads and whose failure can lead to catastrophic failure of the rotorcraft.

(54) COUPON. A small test specimen (e.g., usually a flat laminate) for evaluation of basic lamina or laminate properties or properties of generic structural features (e.g., bonded or mechanically fastened joints).

(55) POINT DESIGN. An element or detail of a specific design that is not considered generically applicable to other structure for the purpose of substantiation (e.g., lugs and major joints). Such a design element or detail can be qualified by test or by a combination of test and analysis.

(56) ELEMENT. A generic element of a more complex structural member (e.g., skin, stringers, shear panels, sandwich panels, joints, or splices).

(57) DETAIL. A non-generic structural element of a more complex structural member (e.g., specific design configurated joints, splices, stringers, stringer runouts, or major access holes).

(58) SUBCOMPONENT. A major three-dimensional structure, which can provide complete structural representation of a section of the full structure (e.g., stub box, section of a spar, wing panel, wing rib, body panel, or frames).

(59) COMPONENT. A major section of the airframe structure (e.g., wing, body, fin, horizontal stabilizer), which can be tested as a complete unit to qualify the structure.

(60) ENVIRONMENT. External, nonaccidental conditions (excluding mechanical loading), separately or in combination, that can be expected in service and which may affect the structure (e.g., temperature, moisture, UV radiation, and fuel).

f. Related Regulatory and Guidance Material.

Document	Title
FAA Order 8110.9	Handbook on Vibration Substantiation and Fatigue Evaluation of Helicopter and Other Power Transmission Systems
AC 27-1B, Chg 1, MG 11	Fatigue Evaluation of Rotorcraft Structure
AC 20-107A	Composite Aircraft Structure
AC 21-26	Quality Control for the Manufacture of Composite Materials
MIL-HDBK-17	Composite Material Handbooks
AC 29-2C, Chg 1, MG 11	Fatigue Tolerance Evaluation of Transport Category Rotorcraft Metallic Structure (Including Flaw Tolerance)
DOT/FAA/CT-86/39	Whitehead, R.S., Kan, H.P., Cordero, R., and Seather, R., “Certification Testing Methodology for Composite Structures”, October 1986.

g. PROCEDURES FOR SUBSTANTIATION OF ROTORCRAFT COMPOSITE STRUCTURE. The composite structures evaluation has been divided into eight basic regulatory areas to provide focus on relevant regulatory requirements. These eight areas are: (1) fabrication requirements; (2) basic constituent, pre-preg, and laminate material acceptance requirements and material property determination requirements; (3) protection of structure; (4) lightning protection; (5) static strength evaluation; (6) fatigue tolerance evaluation (including tolerance to flaws); (7) dynamic loading and response evaluation; and (8) special repair and continued airworthiness requirements. Original as well as alternate or substitute material system constituents (e.g., fibers, resins, etc.), material systems (combinations of constituents and adhesives), and composite designs (laminates, co-cured assemblies, bonded assemblies, etc.) should be qualified in accordance with the methodology presented in the following paragraphs. Each regulatory area will be addressed in turn. It is important to remember that proper

certification of a composite structure is an incremental, building block process which involves phased FAA/AUTHORITY involvement and incremental approval in each of the various areas outlined herein. This approach will minimize the risk associated with substantiation of the full-scale article. It is strongly recommended that a certification team approach, involving fabrication, quality, and engineering specialists from both the applicant and FAA/AUTHORITY, be used for composite structural substantiation.

The team should assure that permanent documentation of the building block approach in the form of reports or other FAA/AUTHORITY-acceptable documents are included in the certification data package. The documentation includes but is not limited to the structural substantiation reports (both analysis and test), manufacturing processes and quality control, and Instructions for Continued Airworthiness (maintenance, overhaul, and repair manuals). FAA/AUTHORITY engineering approves the Airworthiness Limitations Section of the maintenance manual. Engineering practices for many of the areas identified below are available in MIL-HDBK-17.

(1) The first area is the fabrication requirements of § 27.605:

(i) The quality system should be developed considering the critical engineering, manufacturing, and quality requirements along with a guidance standard such as AC 21-26, “Quality Control for the Manufacture of Composite Materials." This ensures that all special engineering, or manufacturing quality instructions for composites are presented, evaluated, documented, and approved, using drawings, process and manufacturing specifications, standards, or other equivalent means. This should be one of the early phases of a composite structure certification program, since this represents a major building block for sequential substantiation work. Some important concepts of AC 21-26 are included below.

(ii) Specific allowable defect limits on, for example, fiber waviness, warp defects, fill defects, porosity, hole edge effects, edge defects, resin content, large area disbonds , and delaminations, etc., for a particular material system component, laminate design, detailed part, or assembly should be jointly established by engineering, manufacturing, and quality and the associated inspection programs for defect detection created, validated, and approved. Each critical engineering design should consider the variability of the manufacturing process to determine the worst-case effects (maximum waviness, disbonds, delaminations, and other critical defects) allowed by the reliability limitations of the approved inspection program.

(iii) If bonds or bond lines such as those typical of rotorcraft rotor blade structure are used, special inspection methods, special fabrication methods or other approved verification methods (e.g., engineering proof tests, reference paragraph g(5) of this AC paragraph) should be provided to detect and limit disbonds or understrength bonds.

(iv) Structurally critical composite construction fabrication process and procurement specifications, for fabricating reproducible and reliable structure, must be

provided and FAA/AUTHORITY-approved early during the certification process and should, as a minimum, cover the following:

(A) Vendor and Qualified Parts List (QPL) Control. Applicants should be able to demonstrate to FAA/AUTHORITY certification team members (both the manufacturing and inspection district office (MIDO) and FAA/AUTHORITY engineering) at any time, that their quality control systems ensure on a continuous basis, that only qualified suppliers provide the basic material constituents or material systems (e.g., pre-pregs) that meet approved material specifications. Recommended guidelines for qualification of alternate material systems and suppliers are contained in MIL-HDBK-17. These methods can also be used, periodically for qualification status renewals of existing material systems and suppliers.

(B) Receiving Inspection and In-Process Inspection. Applicants should be able to demonstrate to FAA/AUTHORITY certification team members (both MIDO and engineering), at any time, that their receiving and in-process quality systems provide products which continuously meet approved material and process specifications. Quality systems should be designed with appropriate checks and balances, such that the necessary statistical reliability and confidence levels for the items being inspected (that are specified by engineering) are continuously maintained. This will require periodic standard inspections and engineering characterization tests on basic constituent and material system samples which should be conducted, as a minimum, on a batch-to-batch basis. The periodic testing necessary to maintain the quality standard should be conducted by the applicants on conformed samples under their approved production inspection, fabrication inspection, and quality systems .

(C) Material System Component Storage and Handling. Applicants should be able to demonstrate to FAA/AUTHORITY certification team members (both MIDO and engineering), at any time, that their composite material system (or constituent) storage and handling procedures and specifications provide products which continuously meet approved material and process specifications. Quality systems should be designed with appropriate checks and balances, such that the necessary statistical reliability and confidence levels for the items being inspected (which are specified by engineering) are continuously maintained. This should require, as a minimum, periodic inspections to ensure that proper records are kept on critical parameters (e.g., room temperature “bench” exposure, shelf life, etc.) and that periodic basic constituent and material system characterization tests are conducted, on a batch-to-batch basis. The periodic testing necessary to maintain the quality standard should be conducted by the applicants on conformed samples under their approved production inspection, fabrication inspection, and quality systems.

(D) Statistical Validation Level. It is necessary to maintain the minimum required statistical validation level of the quality system (which should be specified for each critical item or constituent by the approved quality and engineering specifications). The statistical validation level should be defined and approved early in certification.

Also, approval and proper usage should be continuously maintained during the entire procurement and manufacturing cycles.

(v) Alternate fabrication and process techniques should be approved and must comply with § 27.605. Any alternate techniques should provide at least the same level of quality and safety as the original technique. Any changes should be presented and FAA/AUTHORITY-approved well in advance of the change's production effectivity.

(2) The second area is the basic raw constituent, pre-preg, and laminate material acceptance requirements and material property determination requirements of §§ 27.603 and 27.613. These criteria require application of the critical environmental limits such as temperature, humidity, and exposure to aircraft fluids (such as fuel, oils, and hydraulic fluids), to determine their effect on the performance of each composite material system. Temperature and humidity effects are commonly considered by coupon and component tests utilizing preconditioned test specimens for each material system selected. Material "A" and "B" basis allowable strength values and other basic material properties (based on MIL-HDBK-17 or equivalent) are typically determined by small-scale tests, such as coupon tests, for use in certification work. In the case of composites, determination of these basic constituent and material system properties will almost invariably involve the submittal, acceptance, and use of company standards. Although MIL-HDBK-17 does have some "B" basis allowables available in Volume 2, company testing is required for "A" basis and other "B" basis material systems not listed. Also, test methods vary somewhat from manufacturer to manufacturer; therefore, individual company results will exhibit some scatter in final material property values. Any company standard that is approved and used should meet or exceed related MIL-HDBK-17 requirements. Material structural acceptance criteria and property determination should, as a minimum, include the following:

(i) Property characterization requirements of all material systems (e.g., pre-pregs, adhesives, etc.) and constituents (e.g., fibers, resins, etc.) should be identified, documented, and approved. These requirements, once approved, should be placed in all appropriate procedures and specifications (such as those in paragraph (g)(1) above).

(ii) Moisture conditioning of test coupons, parts, subassemblies, or assemblies should be accomplished in accordance with MIL-HDBK-17, other similar approved methods, or per FAA/AUTHORITY-approved programs.

(iii) The maximum and minimum temperatures expected in service (as derived from test measurements, thermal analyses on panels and other parts, experience, or a combination) should be determined and accounted for in static and fatigue strength (including damage tolerance) substantiation programs considering associated humidity-induced effects.

(iv) The glass transition temperature, Tg, is an important characteristic parameter of amorphous polymers, such as epoxies. It is the temperature below which

the polymer behaves like a “glassy” solid and above which it behaves like a “rubbery” solid, i.e., it is the temperature at which there is a very rapid change in physical properties. In actuality, the change from a hard polymeric material to a rubbery material takes place over a narrow temperature range. A composite material will experience a drastic reduction in matrix controlled mechanical material properties when loaded in this temperature range. Since the resin (matrix) is the critical structural constituent in a composite and since Tg exceedance is critical to structural integrity, Tg determination is necessary. The Tg margin methodology of MIL-HDBK-17 should be implemented, i.e., the wet glass transition temperature (Tg) should be 50° F higher than the maximum structural temperature (see definition in paragraph e(24) of this AC paragraph). For any type of resin or adhesive, an acceptable temperature margin using MIL-HDBK-17 techniques (e.g., consideration of limited high temperature excursions) or equivalent methodologies based on tests or experience or both should be established and approved early in the certification process.

(v) Local design values should be established by analysis and characterization tests and approved for specific structural configurations (point designs), which include the effects of stress risers (e.g., holes, notches, etc.) and structural discontinuities (e.g., joints, splices, etc.). Proper determination of these values for full-scale design and test should be considered one of the most critical building blocks in substantiating and evaluating a composite structure. These transitional load transfer areas typically produce the highest stresses (and strains) and serve as the nucleation sites for many of the failures (including those due to the relatively low interlaminar strength of composites) that occur in service in a full-scale part or assembly. Small scales tests (such as coupon, element, and subcomponent tests), or equivalent approved testing programs, and analytical techniques should be carefully designed, prepared, and approved to evaluate potential “hot spots” and provide accurate simulations and representations of full-scale article stresses and strains in the critical transition areas. Proper certification work in this area will ensure initial safety and continued airworthiness in full-scale production articles.

(vi) The design strain level for each major component and material system should be established such that specified impact damage considerations are defined and properly limited. The effects of the strain levels may be established for each composite material using small-scale characterization tests and then the results should be used to establish or verify the maximum allowable design strain level for each full-scale article. The maximum allowable design strain values selected should also take into account the reliability and confidence levels established for the relevant portions of the quality system. This methodology is necessary because the amount and size of flaws in the production article may restrict the allowable level of design strain. In a no-flaw-growth design, the maximum specified impact damage and manufacturing flaw size at the most critical location on the part will be a major factor in determining the maximum allowable elastic strain. This design approach is currently selected for nearly all civil and most military applications; since, under normal conditions, only visual inspections are required in the field (unless unusual external damage circumstances such as a hail storm occur) to maintain the initial level of airworthiness (safety).

However, many military applications, because of their demanding missions, employ scheduled field non-destructive inspection (NDI) maintenance, (such as comparative ultrasonics) to ensure that flaw growth either does not occur, is controlled by approved structural repair, or by replacement of affected parts. To date, civil applications have not been presented that desire a flaw growth, phased NDI approach. Therefore, selection of the full-scale article's design strain limit based on small-scale tests for a no flaw growth design is seen to be extremely important.

(vii) Composite and adhesive properties should be determined such that detrimental structural creep does not occur under the sustained loads and environments expected in service. Small-scale characterization tests (such as coupon, element, and subcomponent tests) and analysis, which verify and establish the full-scale design criteria and parameters necessary to ensure that detrimental structural creep in full-scale structure does not occur in service, should be conducted early in certification and should be FAA/AUTHORITY-approved.

(viii) Material allowable strength values for full-scale design and testing should be developed using the coupon procedures presented in MIL-HDBK-17 or equivalent. The intent is to represent the material variability including the effects that can occur in multiple batches of material and process runs. At least three batches of material samples should be used in material allowable strength testing. Company standards should be prepared, evaluated, and FAA/AUTHORITY-approved early in certification (as part of the building block process), that reflect the material property determination considerations recommended in MIL-HDBK-17 on a equal to or better than basis.

(3) The third area is the protection of structure as required by § 27.609. Protection against thermal and humidity effects and other environmental effects (e.g., weathering, abrasion, fretting, hail, ultraviolet radiation, chemical effects, accidental damage, etc.) should be provided, or the structural substantiation should consider the results of those effects for which total protection is impractical. Determination and approval of worst-case or most conservative operating limits, and damage scenarios should be accomplished. Appropriate flammability and fire resistance requirements should also be considered in selecting and protecting composite structure. Usually a threat analysis is conducted early in certification that identifies the various threats and threat levels for which protection must be provided. This data is then used to construct and submit for approval the methods-of-compliance necessary to provide proper structural protection.

(4) The fourth area is the lightning protection requirements of § 27.610. Protection should be provided and substantiated in accordance with analysis and with tests such as those of AC 20-53A and FAA Report DOT/FAA/CT-86/8. For composite structure projects involving rotorcraft certified to earlier certification bases (which do not automatically include the lightning protection requirements of § 27.610), these requirements should be imposed as special conditions. The design should be reviewed early in certification to ensure proper protection is present. The substantiation test

program should also be established, reviewed, and approved early to ensure proper substantiation.

(5) The fifth area is the static strength evaluation requirements of §§ 27.305 and 27.307 for composite structure. Structural static strength substantiation of a composite design should consider all critical load cases and associated failure modes, including effects of environment, material and process variability, and defects or service damage that are not detectable or not allowed by the quality control, manufacturing acceptance criteria, or maintenance documents of the end product. The static strength demonstration should include a program of component ultimate load tests, unless experience exists to demonstrate the adequacy of the analysis, supported by subcomponent tests or component tests to accepted lower load levels. The necessary experience to validate an analysis should include previous component ultimate load tests with similar designs, material systems, and load cases.

(i) The effects of repeated loading and environmental exposure, both of which may result in material property degradation, should be addressed in the static strength evaluation. This can be shown by analysis supported by test evidence, by tests at the coupon, element or subcomponent levels, or alternatively by existing data. Earlier discussions in this AC address the effects of environment on material properties (reference paragraph g(2) of this AC paragraph) and protection of structure (reference paragraph g(3) of this AC parapraph). Static strength tests should be conducted for substantiation of new structure. For the critical loading conditions, two approaches to account for prior repeated loading and environmental exposure for structural substantiation exist.

- In the first approach, the large-scale static test should be conducted on structure with prior repeated loading and conditioned to simulate the environmental exposure and then tested in that environment.

- The second approach relies upon coupon, element, and sub-component test data to assess the possible degradation of static strength after application of repeated loading and environmental exposure. The degradation characterized by these tests should then be accounted for in the static strength demonstration test (e.g., load enhancement), or in the analysis of these results (e.g., showing a positive margin of safety with allowables that include the degrading effects of environment and repeated load).

In practice, the two approaches may be combined to get the desired result (e.g., a large-scale static test may be performed at temperature with a load enhancement factor to account for moisture absorbed over the aircraft structure's life).

(ii) The strength of the composite structure should be statistically established, incrementally, through a program of analysis and tests at the coupon, element, subcomponent, or component levels. As part of the evaluation, building block tests and analyses at the coupon, element, or subcomponent levels can be used to

address the issues of variability, environment, structural discontinuity (e.g., joints, cut-outs or other stress risers), damage, manufacturing defects, and design or process-specific details. Figure AC 27 MG 8-1 provides a conceptual schematic of tests included in the building block approach. The material stress-strain curve should be clearly established, at least through the ultimate design load, for each composite design. As shown in Figure AC 27 MG 8-1, the large quantity of tests needed to provide a statistical basis comes from the lowest levels (coupons and elements) and the performance of structural details are validated in a lesser number of sub-component and component tests. The static strength substantiation program should also consider all critical loading conditions for all critical structure including residual strength and stiffness requirements after a predetermined length of service, e.g., end of life (EOL) (which takes into account damage and other degradation due to the service period).

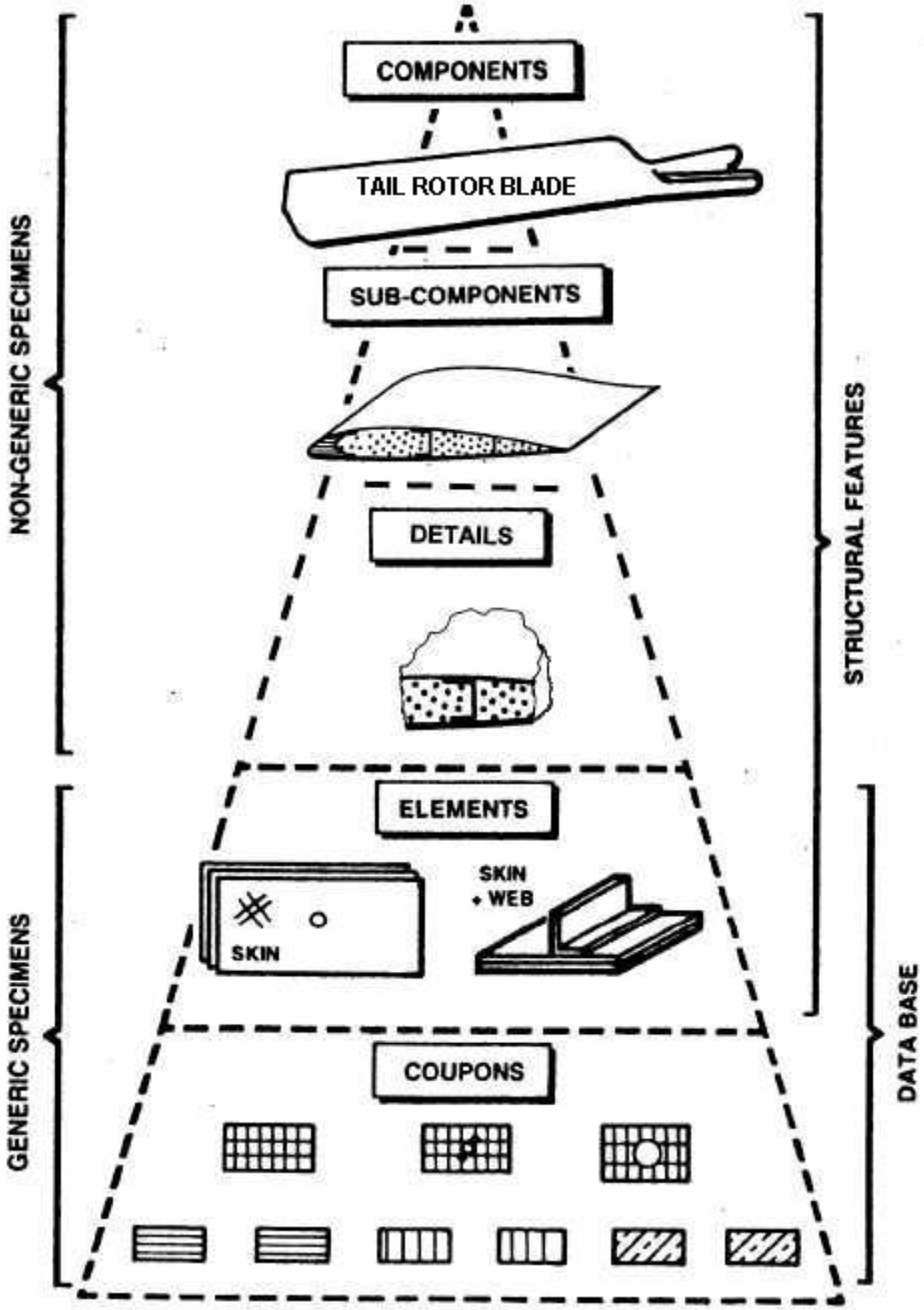

Figure AC 27 MG 8-1. Schematic diagram of building block tests.

(iii) Allowables should be used as specified in § 27.613. These allowables may be generated at the lamina, laminate, or specific design feature level (e.g. filled hole, lap joint, stringer run-out, etc.), provided they accurately reflect the actual value and variability of the structural strength for the critical failure modes being considered, at each point design where margins need to be established.

(iv) The static test articles should be fabricated and assembled in accordance with production specifications and processes so that they are representative of production structure including defects consistent with the limits established by manufacturing acceptance criteria.

(v) The material and processing variability of the composite structure should be considered in the static strength substantiation. This can be achieved by establishing sufficient process and quality controls to manufacture structure and reliably substantiate the required strength in tests and analyses, which support a building block approach. If sufficient process and quality controls cannot be achieved, it may be necessary to account for greater variability with special factors (§ 27.619) applied to the design. Such factors should be accounted for in the component static tests or analysis.

(vi) It should be shown that impact damage (or other minor discrete source damage) that can be realistically expected from manufacturing and service, but not more than the established threshold of detectability for the selected inspection procedure, will not reduce the structural strength below ultimate load capability. This static strength capability can be shown by analysis supported by test evidence, or by a combination of tests at the coupon, element, subcomponent, and component levels. Later discussions in this AC paragraph address the issues associated with damage in excess of that considered in g(5) of this AC paragraph and drops in residual strength below ultimate load capability (reference paragraph g(6)) below.

(6) The <u>sixth</u> area is the <u>fatigue evaluation</u> of structure requirements of § 27.571.

(i) FATIGUE EVALUATION - BACKGROUND. The static strength determination required by §§ 27.305 and 27.307 establishes the ultimate load capability for composite structures that are manufactured, operated, and maintained with established procedures and conditions. The fatigue tolerance evaluation required by § 27.571 establishes procedures that allow the composite structure to retain the intended ultimate load capability when subjected to expected fatigue loads and conditions during its operational life. The procedures established by the fatigue tolerance evaluation include component retirement times and/or inspection intervals. The fatigue tolerance evaluation requires a flaw tolerance assessment that assumes that the baseline ultimate strength capability might be compromised by damage caused by fatigue, environmental effects, intrinsic discrete flaws, or accidental damage. The flaw tolerance assessment establishes procedures that do not allow the static strength capability to degrade below the ultimate strength capability for extended periods,

assuming such damage occurs within the operational life of the structure. When this damage occurs, the remaining structure will withstand reasonable loads without failure or excessive structural deformations until the damage is detected and the component is either repaired to restore ultimate load capability or retired.

(ii) FLAW TOLERANCE EVALUATION - GENERAL. The nature and extent of the required analysis or tests on complete structures or portions of the primary structure can be based on applicable previous fatigue or damage tolerant designs, construction, tests, and service experience on similar structures. In the absence of experience with similar designs, FAA/AUTHORITY-approved structural development tests of components, subcomponents, and elements should be performed. The following considerations are unique to the use of composite material systems and should be observed for the method of substantiation selected by the applicant. Rotorcraft structure provides a broad range of composite applications that are quite different in terms of functionality, geometry, and inspectability. These include the rotors, the drive shafts, the fuselage, control system components (e.g., push-pull rods), and the control surfaces. When selecting the approach, attention should be given to the composite application under evaluation, the type of potential damage or degradation of the structural design details, the materials used, and margin over flight loads. Whatever the approach that may be selected, the following considerations will apply for tests and analysis:

(A) The test articles should be fabricated and assembled in accordance with production specifications and processes so that the test articles are representative of production structure.

(B) The test articles should include material imperfections whose extent is not less than the limits established under the inspection and acceptance criteria used during the manufacturing process and consistent with the inspection techniques used in service (e.g., visual, ultrasonic, X-ray). The initial extent of these imperfections should be discussed and agreed with the FAA/AUTHORITY, taking into account experience in manufacturing and routine in-service inspections. Typical defects to be considered include but are not limited to the following:

(1) Disbonds and weak bonds (considered as disbonds).

(2) Delaminations, fiber waviness, porosity, voids.

(3) Scratches, gouges, and penetrations.

(4) Impact damage.

(C) The use of composite secondary bonding in manufacturing or maintenance requires strict process and quality controls to achieve the reliability needed to use such technology in critical structures (reference AC 21-26). Assuming good process and quality controls, service history has shown that additional damage tolerant

design considerations are also needed to ensure the safety of structure with secondary bonds (i.e., random, but an unacceptable numbers of weak bonds discovered in service). Unless the ultimate strength of each critical bonded joint can be reliably substantiated in production by NDI techniques (or other equivalent, approved techniques), then the limit load capability should be ensured by any of the following or a combination thereof.

(1) Consider isolated disbonds and weak bonds (represented by zero bond strength) in structural elements that use secondary bonding for primary load transfer. The associated disbond size should be up to the limitations provided by redundant design features (i.e., mechanical fasteners or a separate bonding detail). The structure containing such damage should be shown to carry limit load by tests, analyses, or some combination of both. For purposes of test or analysis demonstration, each disbond should be considered separately as a random occurrence (i.e., it is not necessary to demonstrate residual strength with all structural elements disbonded simultaneously).

(2) Each critical bonded joint on each production article should be proof tested to the critical limit load.

(3) Critical bonded joints that have high static margins of safety (e.g., some rotor blades) may be acceptable, provided there is satisfactory service history of like or similar components.

(D) The fatigue load spectrum developed for fatigue testing and analysis purposes should be representative of the anticipated service usage. Low amplitude load levels that can be shown not to contribute to fatigue damage may be omitted (truncated). Reducing maximum load levels (clipping) is generally not accepted.

(E) Environmental effects (temperature and humidity representative of the expected service usage) on the static or fatigue behavior and damage growth should be considered. Unless tested in the environment, appropriate environmental knock down factors for the static and the fatigue test articles should be derived and applied in the evaluation.

(F) Variability in fatigue behavior should be covered by appropriate load and/or life scatter factors and these factors should take into account the number of specimens tested.

(G) The following Figure AC 27 MG 8-2 illustrates the extent of the impact damage that needs to be considered in the flaw tolerance evaluation.

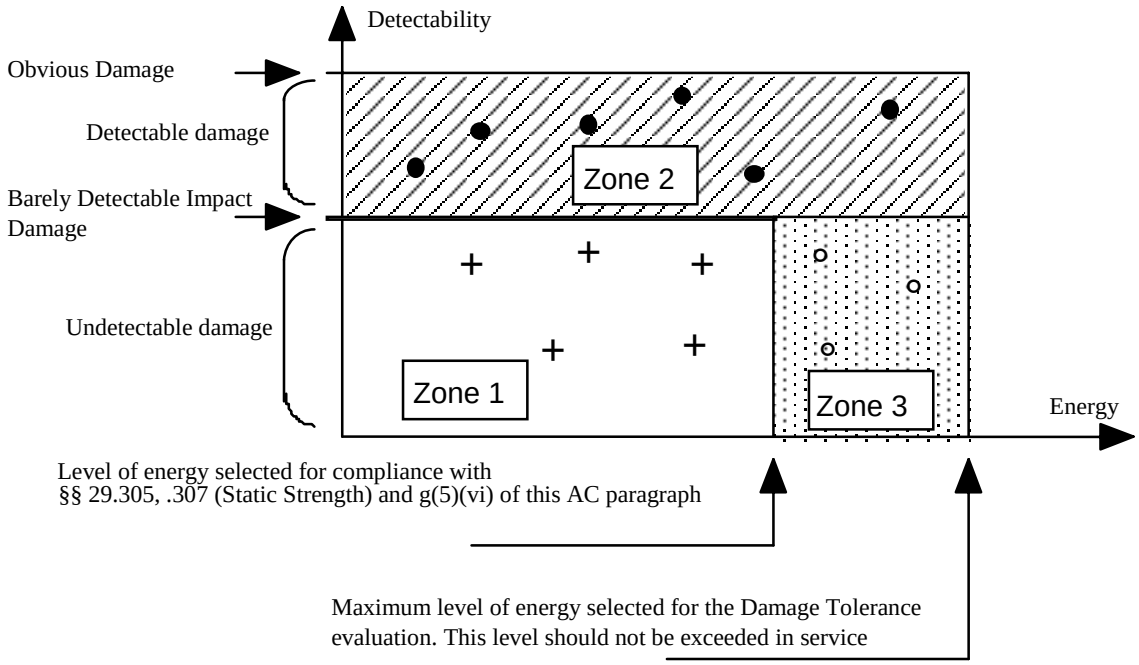

Figure AC 27 MG 8-2 Characterization of Impact Damage

(1) Both the energy level associated with the static strength demonstration and the maximum energy level associated with the damage tolerance evaluation (defined in the figure above) are dependent on the part of the structure under evaluation and a threat assessment.

(2) Obvious impact damage is used here to define the threshold from which damage is readily detectable and appropriate actions taken before the next flight.

(3) Barely Detectable Impact Damage defines the state of damage at the threshold of detectability for the approved inspection procedure. Barely Visible Impact Damage (BVID) is that threshold associated with a detailed visual inspection procedure.

(4) Detectable Damage defines the state of damage that can be reliably detected at scheduled inspection intervals. Visible Impact Damage (VID) is that state associated with a detailed visual inspection.

(5) A threat assessment is needed to identify impact damage severity and detectability for design and maintenance. A threat assessment usually includes damage data collected from service plus an impact survey. An impact survey consists of impact tests performed with configured structure, which is subjected to boundary conditions characteristic of the real structure. Many different impact scenarios and locations are typically considered in the survey, which has a goal of identifying the most

critical impacts (i.e., those causing the most serious damage but are least detectable). When simulating accidental impact damage, blunt or sharp impactors should be selected to represent the maximum criticality versus detectability, according to the load conditions (e.g., tension, compression, or shear). Until sufficient service experience exists to make good engineering judgments on energy and impactor variables, impact surveys should consider a wide range of conceivable impacts, including runway or ground debris, hail, tool drops, and vehicle collisions. Service data collected over time can better define impact surveys and design criteria for subsequent products, as well as establish more rational inspection intervals and maintenance practice.

(6) Three Zones are defined by Figure AC 27 MG 8-2:

- Zone 1: Since the damage is not detectable, Ultimate Load capability is required. The provisions of paragraph g(5) above provide a means of compliance.

- Zone 2: Since the damage can be detected at scheduled inspection, Limit Load (considered as Ultimate) capability is the minimum requirement for this damage.

- Zone 3: Since the damage is not detectable with the proposed in-service inspection procedures, ultimate load capability is required, unless an alternate procedure can show an equivalent level of safety. For example, residual strength lower than ultimate may be used in association with an improved inspection procedure.

(iii) FATIGUE TOLERANCE EVALUATION – MEANS OF COMPLIANCE. One, or a combination of, the methods below should show compliance with the requirements of this section. The Flaw Tolerant Safe-Life Evaluation or the Fail-Safe Evaluation are to be used unless it can be shown that neither can be achieved within the limitations of geometry, inspectability, or good design practice. In that case, the Safe-Life Evaluation should be used. From current state-of-the-art with rotorcraft applications, it is widely admitted that composite materials have good flaw or damage tolerance capabilities and therefore the safe-life option is rarely necessary. Flaw Tolerance evaluations are best suited for most composite structures, particularly those with structural redundancy and inherent resistance to damage growth. Damage resulting from anomalous or accidental events must be considered in the Flaw Tolerant Safe-Life and Fail-Safe evaluations.

The fatigue substantiation should include sufficient coupon, element, sub-element, or component tests to establish the fatigue scatter, curve shapes, and the environmental effects. The substantiation should include full-scale testing but also may be accomplished by analysis supported by test evidence. When spectrum testing is used, the lowest load levels can be eliminated from the spectrum if they can be shown to be non-damaging. The substantiation should include a static strength evaluation to show that the required residual strength and adequate stiffness, accounting for the effects of environment, are retained for the life of the structure or the appropriate inspection

interval. Flaws and damage as determined in paragraph g(6)(ii) above for the specific structure being substantiated should be imposed at each critical area of the structure.

(A) Flaw Tolerant Safe-Life Evaluation. This is a “No-Growth” method in that it demonstrates that the structure, with flaws present, is able to withstand repeated loads of variable magnitude without detectable flaw growth for the life of the rotorcraft or within a specified replacement time. This fatigue evaluation may be used to substantiate any type of damage that will remain in-service for the life of the structure.

No specific inspection requirements are generated from the test program in this method. However, routine inspections for cracking, delaminations, and service damage as outlined in § 27.1529 are always required. Compliance using full-scale, component, or sub-component fatigue testing can be accomplished by either of the following methods:

(1) `S-N Method. This method is based on determining the point where initiation of growth occurs for the flaws present at critical locations in the structure. AC 27-1B, Chg 1, MG-11, provides guidance that can be appropriate for this method in composites. The method utilizes one or more full-scale, component, or sub-component test specimens subjected to constant-amplitude or spectrum loading applied in a distribution on the structure that is representative of critical flight conditions. Any indication of growth of the imposed flaws and defects, or structurally significant cracking, disbonding, splintering or delamination of the composite, defines the fatigue initiation characteristic of the structure in terms of applied load and cycles. Working S-N curves are established from the mean curve using strength or cycle reductions to account for fatigue scatter and environmental effects. Flight loads are compared to this working curve, and if any intercepts occur, a cumulative damage calculation is conducted to establish the component retirement time. Compliance with the ultimate load requirements should be demonstrated at the completion of the fatigue test.

(2) Life Test Method. This method uses spectrum fatigue testing to verify the absence of flaw growth over a large number of cycles that are equivalent to a lifetime of expected usage. The method uses one or more full-scale, component, or sub-component test specimens subjected to spectrum fatigue loading applied in a representative distribution of flight loads, including Ground-Air-Ground (GAG) loads. Fatigue test loads should be increased by factors for environment and fatigue strength scatter. The load may also be increased using an S-N curve approach to reduce the duration of the test. Please reference "Certification Testing Methodology for Composite Structure", Report No. DOT/FAA/CT-86/39 for a discussion of the S-N approach. Any significant growth of the imposed flaws and defects, or structurally significant cracking, disbonding, splintering, or delamination of the composite during the test constitutes failure to achieve the desired lifetime. However, the equivalent life demonstrated at the time of inception of flaw growth or cracking can be used as a retirement time for the component. Compliance with the ultimate load requirements should be demonstrated at the completion of the fatigue test.

(B) Fail-Safe (Residual Strength after Flaw Growth) Evaluation. This method demonstrates that the structure following a partial failure still has a sufficient residual strength capability within a specified inspection interval or the established retirement life of the component. If a retirement life is established, an ultimate design load capability is generally required while, if an inspection interval is determined, a limit load capability is the minimum acceptable residual strength capability that needs to be demonstrated. Full-scale, component, or sub-component testing should be accomplished using one or more specimens subjected to constant amplitude or spectrum loading applied in a manner representative of flight load conditions. The test loads should be increased by factors that account for environment and fatigue strength scatter. The results of the testing can be used to manage the structure in one of the three methods described below or a combination thereof.

(1) Fail-Safe, No Growth Evaluation. This approach is appropriate for inspectable in-service accidental damage. Structural details, elements, and sub-components of critical structural areas, components, or full-scale structures, should be tested under repeated loads for validating a no-growth approach to the flaw tolerance requirements. The number of cycles applied to validate a no-growth concept should be statistically significant, and may be determined by load or life considerations. Residual strength testing or evaluation should be performed after repeated load cycling and demonstrate that the residual strength of the structure is equal to or greater than limit load considered as ultimate. Moreover, it should be shown that stiffness properties have not changed beyond acceptable levels. Inspection intervals should be established, considering the residual strength capability associated with the assumed damage. The intent of this is to assure that structure is not exposed to an excessive period of time with static margins less than ultimate, providing a lower safety level than in the typical slow growth situation, as illustrated in the Figure AC 27 MG 8-3. Once the damage is detected, the component is either repaired to restore ultimate load capability or replaced.

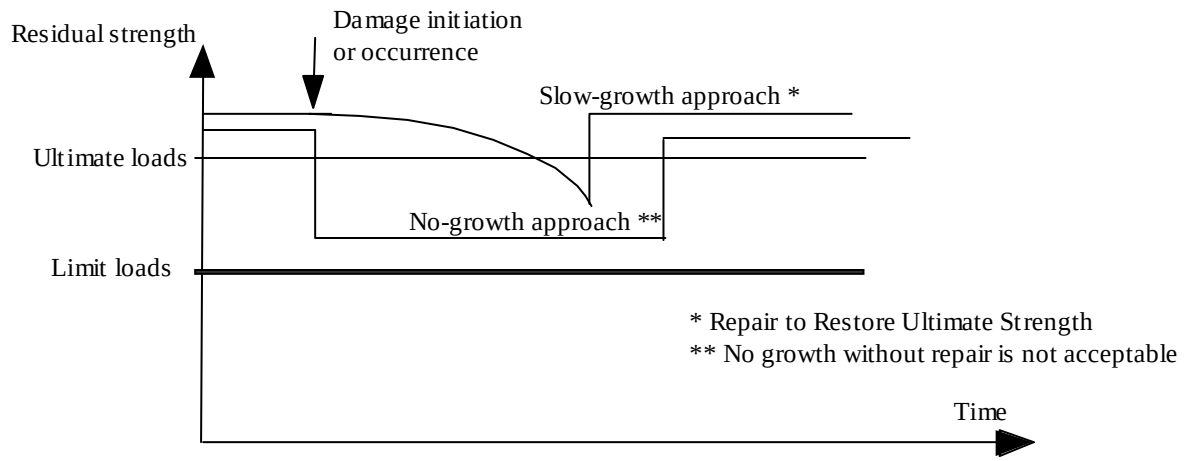

Figure AC 27 MG 8-3. Residual Strength vs. Time

The lower the residual strength caused by an accidental damage event, the shorter the inspection interval should be. Considerations of both inspectability and impact surveys (including probability of occurrence) for specific structure may be used to isolate the most critical threats to consider in setting a maintenance inspection interval. Knowledge of the residual strength for a given critical damage is also needed for such an evaluation. If it is known that the design is capable of handling large and clearly detectable damage, while maintaining a residual strength well above limit load, a less rigorous engineering approach may be applied in establishing the inspection interval.

(2) Slow Growth Evaluation. This method is applicable when the flaw grows in the test and the growth rate is shown to be slow, stable, and predictable, as illustrated in Figure AC 27 MG 8-4. An inspection program should be developed consisting of the frequency, extent, and methods of inspection for inclusion in the maintenance plan. Inspection intervals should be established such that the damage will have a very high probability of detection between the time it becomes initially inspectable and the time at which the extent of the damage reduces the residual static strength to limit load (considered as ultimate), including the effects of environment. For any damage size that reduces the load capability below ultimate, the component is either repaired to restore ultimate load capability or replaced. Should functional impairment (such as unacceptable loss of stiffness) occur before the damage becomes otherwise critical, this should be accounted for in the development of the inspection program.

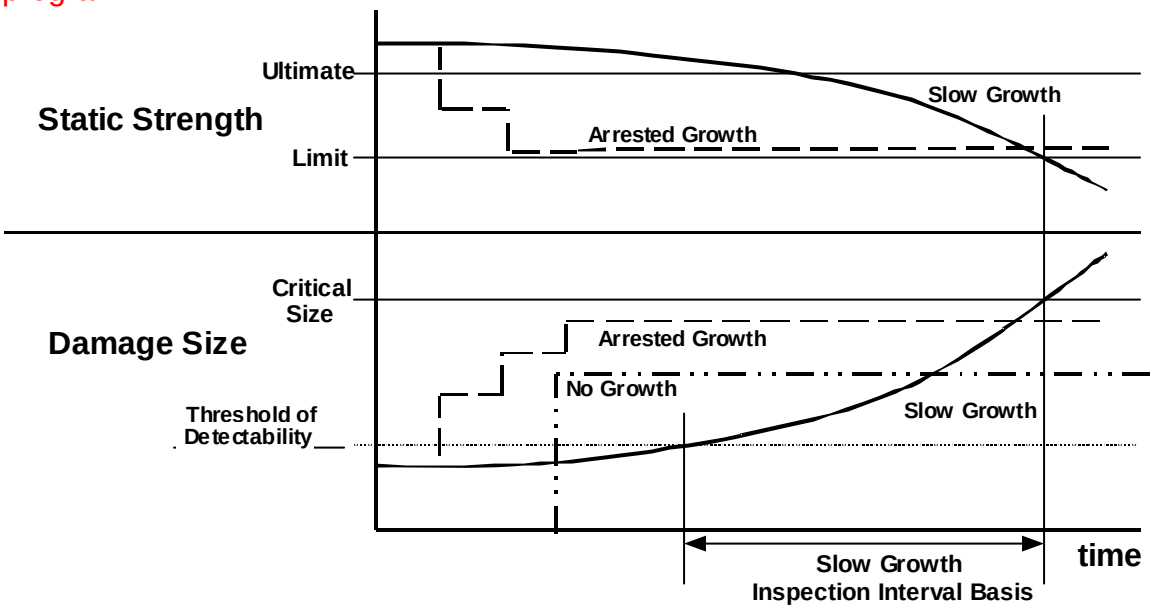

Figure AC 27 MG 8-4.
Illustration of Residual Strength and Damage Size Relationships for Fail-Safe Substantiation.

(3) Arrested Growth Evaluation. This method is applicable when the flaw grows, but the growth is mechanically arrested or terminated before becoming critical (residual static strength reduced to limit load), as illustrated in Figure AC 27 MG 8-4. Arrested Growth may occur due to design features such as a geometry change, reinforcement, thickness change, or a structural joint. This approach is appropriate for inspectable arrested growth damage. Structural details, elements, and sub-components of critical structural areas, components or full-scale structures, should be tested under repeated loads for validating an arrested growth approach to the flaw tolerance requirements. The number of cycles applied to validate an arrested growth concept should be statistically significant, and may be determined by load and/or life considerations. Residual strength testing or evaluation should be performed after repeated load cycling and demonstrate that the residual strength of the structure is equal to or greater than limit load considered as ultimate. Moreover, it should be shown that stiffness properties have not changed beyond acceptable levels. Inspection intervals should be established, considering the residual strength capability associated with the arrested growth damage. The intent of this is to ensure that structure is not exposed to an excessive period of time with static margins less than ultimate, providing a lower safety level than in the typical slow growth situation, as illustrated by Figure AC 27 MG 8-3. For any damage size that reduces load capability below ultimate, the component is either repaired to restore ultimate load capability or replaced.

The lower the residual strength caused by an arrested growth event, the shorter the inspection interval should be. Considerations of both inspectability and impact surveys (including probability of occurrence) for specific structure may be used to isolate the most critical threats to consider in setting a maintenance inspection interval. Knowledge of the residual strength for a given critical damage is also needed for such an evaluation. If it is known that the design is capable of handling large and clearly detectable damage, while maintaining a residual strength well above limit load, a less rigorous engineering approach may be applied in establishing the inspection interval.

(C) Safe-Life Evaluation. This method demonstrates that the structure, in an as-manufactured condition, is able to withstand repeated loads of variable magnitude without detectable cracks, disbonds, or delaminations for the life of the rotorcraft or within a specified retirement time. It is available for use only when both the Fail-Safe and Flaw Tolerant Safe-Life methods have been shown to be impractical due to considerations of geometry, inspectability, or good design practice. Further guidance for Safe-Life substantiation is provided in AC 27-1B, Chg 1, MG-11, “Fatigue Evaluation of Rotorcraft Structure”. The fatigue test articles should be fabricated and assembled in accordance with production specifications and processes so that they are representative of production structure including defects consistent with the limits established by manufacturing acceptance criteria.

(D) Combination of Safe Life and Fail Safe Evaluations. Generally it may be appropriate to establish both a retirement time and an inspection program for a given structure.

(iv) Additional Considerations for FATIGUE AND FLAW TOLERANCE Evaluations.

(A) Experience with the application of methods of fatigue and flaw tolerance evaluations indicates that a relevant test background should exist in order to achieve the design objective. It is the general practice within industry to conduct flaw tolerance tests for design information and guidance purposes. It is crucial that the critical structure be identified and tested to the proper flight and ground loads. In the fatigue and flaw tolerance evaluation the following items must be considered:

(B) Identification of the structure to be considered in each evaluation (a failure mode and effects analysis or similar method should be used).

(1) Identification of Principal Structural Elements. Principal structural elements are those that contribute significantly to carrying flight and ground loads and whose failure could result in catastrophic failure of the rotorcraft. Typical examples of such elements are:

(i) Rotor blades and attachment fittings.

(ii) Rotor heads, including hubs, hinges, and some main rotor dampers.

(iii) Control system components subject to repeated loading, including control rods, servo structure, and swashplates.

(iv) Rotor supporting structure (lift path from airframe to rotor head).

(v) Fuselage, including stabilizers and auxiliary lifting surfaces.

(vi) Main fixed or retractable landing gear and fuselage attachment structure.

(2) Identification of Locations Within Principal Structural Elements to be Evaluated. The locations of damage to structure for damage tolerance evaluation can be determined by analysis or by fatigue test on complete structures or subcomponents. However, tests will be necessary when the basis for analytical prediction is not reliable, such as for complex components. If less than the complete structure is tested, care should be taken to ensure that the internal loads and boundary conditions are valid. The following should be considered:

(i) Strain gauge data on undamaged structure to establish points of high stress concentration as well as the magnitude of the concentration.

(ii) Locations where analysis shows high stress or low margins of safety.

(iii) Locations where permanent deformation occurred in static tests.

(iv) Locations of potential fatigue damage identified by fatigue analysis.

(v) Locations where the stresses in adjacent elements will be at a maximum with an element in the location failed.

(vi) Partial failure locations in an element where high stress concentrations are present in the remaining structure.

(vii) Locations where detection would be difficult.

(viii) Design details that are prone to fatigue or other damage indicated by service experience of similarly designed components.

(3) In addition, the areas of probable damage from sources such as a severe corrosive or fretting environment, a wear or galling environment, or a high maintenance environment should be determined from a review of the design and past service experience.

(C) The stresses and strains (steady and oscillatory) associated with all representative steady and maneuvering operating conditions expected in service.

(D) The frequency of occurrences of various flight conditions and the corresponding spectrum of loadings and stresses.

(E) The fatigue strength, fatigue crack propagation characteristics of the materials used and of the structure, and the residual strength of the damaged structure.

(F) Inspectability, inspection methods, and detectable flaw sizes.

(G) Variability of the measured stresses of paragraph g(6)(iv)(C) above, the actual flight condition occurrences of paragraph g(6)(iv)(D) above, and the fatigue strength material properties of paragraph g(6)(iv)(E).

(v) FLIGHT STRAIN MEASUREMENT PROGRAM.

(A) General. Subsequent to design analysis, in which aircraft loads and associated stresses are derived, the stress level and loads are to be verified by a carefully controlled flight strain measurement program. (This guidance is similar to that of AC 27-1B, MG 11, Chg 1.)

(B) Instrumentation.

(1) The instrumentation system used in the flight strain measurement program should accurately measure and record the critical strains under test conditions associated with normal operation and specific maneuvers. The location and distribution

of the strain gauges should be based on a rational evaluation of the critical stress areas. This may be accomplished by appropriate analytical means supplemented, when deemed necessary, by strain sensitive coatings or photoelastic methods. The distribution and number of strain gauges should define the load spectrum adequately for each part essential to the safe operation of the rotorcraft as identified in § 27.571(a)(1)(i). Other devices such as accelerometers may be used as appropriate.

(2) The corresponding flight parameters (airspeed, rotor RPM, center of gravity accelerations, etc.) should also be recorded simultaneously by appropriate methods. This is necessary to correlate the loads and stresses with the maneuver or operating conditions at which they occurred.

(3) The instrumentation system should be adequately calibrated and checked periodically throughout the flight strain measurement program to ensure consistent and accurate results.

(C) Parts to be Strain-Gauged. Fatigue critical portions of the rotor systems, control systems, landing gear, fuselage, and supporting structure for rotors, transmissions, and engine are to be strain-gauged. For rotorcraft of unusual or unique design, special consideration might be necessary to ensure that all the essential parts are evaluated.

(D) Flight Regimes and Conditions to be investigated.

(1) Typical flight and ground conditions to be investigated in the flight strain measurement program are given in Attachment 1 to paragraph AC 27 MG 11.

(2) The determination of flight conditions to be investigated in the flight strain measurement program should be based on the anticipated use of the rotorcraft and, if available, on past service records for similar designs. In any event, the flight conditions considered appropriate for the design and application should be representative of the actual operation in accordance with the rotorcraft flight manual. In the case of multiengine rotorcraft, the flight conditions concerning partial engine-out operation should be considered in addition to complete power-off operation. The flight conditions to be investigated should be submitted in connection with the flight evaluation program.

(3) The severity of the maneuvers investigated during the flight strain survey should be at least as severe as the maximum likely in service.

(4) All flight conditions considered appropriate for the particular design are to be investigated over the complete rotor speed, airspeed, center of gravity, altitude, and weight ranges to determine the most critical stress levels associated with each flight condition. The temperature effects on loads as affected by elastomeric components are to be investigated. To account for data scatter and to determine the stress levels present, a sufficient amount of data points should be obtained at each

flight condition. Consideration can be given to the use of scatter factors in determining the sufficiency of data points. In some instances, the critical weight, center of gravity, and altitude ranges for the various maneuvers can be based on past experience with similar design. This procedure is acceptable where adequate flight tests are performed to substantiate such selections. The combinations of flight parameters that produce the most critical stress levels should be used in the fatigue evaluation.

(vi) FREQUENCY OF LOADING.

(A) Types of Operation.

(1) The probable types of operation (transport, utility, etc.) for the rotorcraft should be established. The type of operation can have a major influence on the loading environment. In the past, rotorcraft have been substantiated for the most critical general types of operation with some consideration of special, occasional types of operation. To assure that the most critical types of operation are considered, each major rotorcraft structural component should be substantiated for the most critical types of operation as established by the manufacturer. The types of operation shown below should be considered and, if applicable, used in the substantiation:

(i) Long flights to remote sites (low ground-air-ground cycles but high cruising speeds).

(ii) Typical, general types of operation.

(iii) Short flights as used in logging operations.

(2) One means is to substantiate for the most severe type of operation; however, this method is not always economically feasible.

(3) A second means is to quantify the influence of mission type on fatigue damage by adding to or replacing hour limitations by flight cycle limitations (if properly defined and easily identifiable by the crew, for example: one landing, one load transportation). A special type of flight hour limitation replacement using factorization of flight hours for multiple types of operations may be feasible if continuing manufacturer's technical support is provided and documented; i.e., the manufacturer either provides the factorization analyses or checks them on a continuing basis for each rotorcraft.

(4) Where one or more of the above operations are not among the general uses intended for the rotorcraft, the rotorcraft flight manual should state in the limitations section that the intended use of the rotorcraft does not include certain missions or repeated maneuvers (i.e., logging with its high number of takeoffs/landings per hour). A note to this effect should also appear in the rotorcraft airworthiness limitations section of the maintenance manual prepared in accordance with § 27.1529.

(5) Should subsequent usage of the rotorcraft encompass a mission for which the original structural substantiation did not account, the effects of this new mission environment on the frequency of loading and structural substantiation should be addressed and where practicable, in the interest of safety, a reassessment made. If this reassessment indicates the necessity for revised retirement times, those new times may be limited to aircraft involved in the added mission provided.

(i) Proper part re-identification is established;

(ii) a Rotorcraft Flight Manual (RFM) supplement outlining limitations is approved;

(iii) an airworthiness limitations section supplement is approved; or

(iv) an appropriate combination of part re-identification, RFM supplement, or airworthiness limitation section supplement is approved.

(B) Loading Spectrum. The spectrum allocating percentage of time or frequencies of occurrence to flight conditions or maneuvers is to be based on the expected usage of the rotorcraft. This spectrum is to be such that it is unlikely that actual usage will subject the structure to damage beyond that associated with the spectrum. Considerations to be included in developing this spectrum should include prior knowledge based on flight history recorder data, design limitations established in compliance with § 27.309, and recommended operating conditions and limitations specified in the rotorcraft flight manual. The distribution of times at various forward flight speeds should reflect not only the relation of these speeds to V_{NE} but also the recommended operating conditions in the rotorcraft flight manual that govern V_c or cruise speed. Where possible, it is desirable to conduct the flight strain-gauge program by simulating the usage as determined above, with continuous recording of stresses and loads, thus obtaining directly the stress and load spectra for structural elements.

(7) The seventh major area is the dynamic loading and response requirements of §§ 27.241, 27.251, and 27.629 for vibration and resonance frequency determination and separation for aeroelastic stability and stability margin determination for dynamically critical flight structure. Critical parts, locations, excitation modes, and separations are to be identified and substantiated. This substantiation should consist of analysis supported by tests and tests that account for repeated loading effects and environment exposure effects on critical properties, such as stiffness, mass, and damping. Initial stiffness, residual stiffness, proper critical frequency design, and structural damping are provided as necessary to prevent vibration, resonance, and flutter problems.

(i) All vibration and resonance critical composite structure are identified and properly substantiated.

(ii) All flutter-critical composite structures are identified and properly substantiated. This structure must be shown by analysis to be flutter free to 1.1 V_{NE} (or

any other critical operating limit, such as V_D, for a VSTOL aircraft) with the extent of damage for which residual strength and stiffness are demonstrated.

(iii) Where appropriate, crash impact dynamics considerations should be taken into account to ensure proper crash resistance and a proper level of occupant safety for an otherwise survivable impact. Please reference §§ 27.562 and 27.952.

(8) The eighth area is the special repair and continued airworthiness requirements of §§ 27.611, 27.1529, and 14 CFR Part 27 Appendix A for composite structures. When repair and continued airworthiness procedures are provided in service documents (including approved sections of the maintenance manual or instructions for continued airworthiness) the resulting repairs and maintenance provisions must be shown to provide structure that continually meets the guidance of paragraphs (1) through (7) of this AC paragraph. All certification based repair and continued airworthiness standards, limits, and inspections must be clearly stated and their provisions and limitations defined and documented to ensure continued airworthiness. No composite structural repair should be attempted that is beyond the scope of the applicable approved Structural Repair Manual (SRM) without an engineering design approval by a qualified FAA/AUTHORITY representative (DER or staff engineer).

CHAPTER 3
AIRWORTHINESS STANDARDS
NORMAL CATEGORY ROTORCRAFT

MISCELLANEOUS GUIDANCE (MG)

AC 27 MG 9 ROTORCRAFT ONE-ENGINE-INOPERATIVE POWER ASSURANCE

a. Purpose. The purpose of this document is to establish an approach for an engine power assurance procedure which will assure that the required OEI power level can be achieved.

b. General. The data and methods described herein are intended to be utilized as a guide and not necessarily the only means of achieving the desired result.

c. Applicability. The applicability of the document is intended to be primarily in support of the new 30-second and 2-minute OEI rotorcraft engine rating scheme.

d. Partial Power Assurance (Engine “Run-Line”).

(1) Fundamental to the concept of limited-use one-engine inoperative (OEI) ratings is the requirement to be certain that the rated OEI power will indeed be available when needed. Conventional periodic power-assurance and topping checks are impractical with the limited-use rating concept because of the rapid expenditure of useful life during exposure at the engine speeds and temperatures consistent with limited-use ratings; therefore, we require a means of assuring the power available, other than by actual demonstration on each service engine. The advent of more sophisticated controls and engine developments catering to the 30-second/2-minute OEI rating concepts can provide the means to determine: (1) that the thermodynamic/mechanical capability of the engine as tested at the prevailing ambient conditions, will permit reaching a specified power level at any other ambient condition and (2) the fuel system and the various limiters will not prevent the engine achieving OEI power on demand. Pending availability of these new methods, the “parallel run line check” approach is recommended.

(2) The method commonly called the “parallel run-line check” that has been in use for two decades may require refinement for application to the new rating structure where the degree of extrapolation to the OEI power level is more extensive and the slope of the individual engine characteristic is important. As in any power assurance method, success is strongly dependent on the validity of the data base, the maintenance of the engines and sensor/indicating systems, and the care taken during the conduct of the power check. In addition, trending of individual engine performance by the operator and associated analyses can be used to avoid unnecessary flight delays and engine removals.

(3) Thermodynamic/mechanical capability can be addressed by test stand mapping of development engines over a range of ambient conditions to establish an adequate data base of engine characteristics. This will address characteristic slope variations between engines and establish correction factors necessary for extrapolation of data from a power assurance checkpoint to the 30-second OEI rating. Statistical verification and/or modification of the data base may be necessary during production by mapping of sample production engines. Performance data, at the 30-second OEI condition, taken during the supplementary block test and also during the “overhaul test” will demonstrate the capability of an engine and its control system near the end of an overhaul period to produce the required power. This will demonstrate capability with a deteriorated base-performance engine.

(4) The question of fuel system limitations and other various limiters, which could prevent the engine from achieving OEI power on demand, may be addressed by use of more sophisticated control systems, for example, electronic controls utilizing several engine parameter limiters each with automatic datum reset capability. Such control systems can sense an engine failure and automatically reset the operating limiters upward from “normal” to “OEI” limits. Conventional flow and electronic bench testing can be used to verify the function and limit setting of the units when new or after overhaul or repair. The reset features can be extended in function to include a fixed magnitude pulldown type reset for use in verifying new and field production engine/control combination function ability. Pulldown type resets are currently in use today for verification of limiter settings on some engines and can be utilized in this application to avoid unneeded exposure of the engine to the rapid life expenditure conditions.

(5) While the above is envisioned as the probable means in which assurance of capability will occur early in the application of such engines, there will be other means developed. One such means would be utilization of modern electronic engine condition or health monitors to display “go” or “no go” conditions relative to the ability of the engine and its control system to produce 30-second OEI power if required. In this application the device would be a “power assurance meter” and could be used with electronic, hydro-mechanical, and pneumo-mechanical control systems. It is entirely reasonable to expect that self-taught or self-programmed power assurance meters can be used that continually program the actual performance slope of the subject engine and extrapolate to the 30-second OEI with continuous engine monitoring. Self-programming occurs by sampling engine temperature, speed, torque, other characteristics (such as fuel pressure), and ambient conditions, resulting in the reflection of an actual characteristic for the installed engine. The availability of this information permits treating engines individually, whether it is a new or deteriorated engine or one with either minimum or maximum slope, without the necessary compromises to “best” engines that necessarily occurs using the earlier statistical approach. The question of instantaneous fuel system capacity could be addressed by fuel pump/control systems incorporating bypass systems equipped with flow meters. The health monitor or power assurance meter can continually integrate the fuel flow increment available in terms of power increment required in the event of OEI and would

include this intelligence in its pass-fail judgment criteria. Systems of this type would further be conducive to in-service ground checks by overt by-pass deactivation from low power settings to assure satisfactory mechanical function.

(6) Power assurance for the limited-use OEI ratings depends on a complete understanding of the engine model's operating characteristics. Two approaches have been discussed, one where, with the aid of a sophisticated fuel control system, the engine "learns" its own characteristics, and the other where the performance extrapolation is compared with a known minimum standard. The establishment of the standard is obviously a vital part of the procedure, which depends to a large extent on the existence of a reliable data base. In a mature program this is relatively easy to maintain, since it is possible to use the new production engine acceptance data to establish engine-to-engine variation and also to test engines prior to overhaul to determine the effects of deterioration. Thus, an up-to-date minimum or worst-engine characteristic can be maintained and service engines would be compared with this minimum engine.

(7) When the engine in question is a completely new design, or a remote derivative of an existing design, establishing the initial data base presents some problems which must be resolved. New production engines will eventually establish engine-to-engine variation, but initially an estimated worst variation must be assumed. The rate of deterioration and its impact on the base standard must be accounted for from the first engine delivered, yet it may be some time before an acceptable number of engines can be tested after service.

(8) A partial solution lies in the development and qualification cycle of the engine. A typical new-design program requires several development engines, of which more than half can be expected to be used for endurance or accelerated endurance testing. Furthermore, by the time certification is completed and production deliveries have commenced, these engines will normally have amassed several thousand hours of running usually to a schedule far more rigorous than normal service. The information gathered during these tests will provide the necessary data base for the assessment of in-service engines, and it can be progressively enlarged, and the derived data refined, as further production and service data are obtained.

e. Engine Considerations. This section describes the potential causes of an engine not delivering specification OEI power levels in spite of passing a parallel run-line power assurance check. Possible solutions are discussed in the context of one time use 30-second and 2-minute ratings.

(1) Fuel Flow.

(i) An engine may not achieve maximum power available or emergency rating because insufficient fuel is supplied. This condition has a number of possible causes:

(A) Low acceleration schedule

(B) Low maximum fuel stop

(C) Low fuel pump output

(D) Restrictions between the fuel control and the combustor

(ii) The proposed emergency ratings (OEI) may preclude the use of a topping check to uncover the above problems; therefore the following procedures are advanced which can be used either separately or in combination with other approved methods to assure that the required fuel flow is available.

(iii) During engine acceleration the fuel flow rate is considerably higher when compared with the normal steady state condition. This fact can be used to verify the availability of OEI fuel flow. The verification can be done by a direct measurement of fuel flow during an acceleration or derived indirectly from the engine acceleration rate. It is envisaged that the determination of fuel flow by these procedures should be done by some automatic means.

(iv Figure AC 27 MG 9-1 is a bypass technique in which some of the fuel controls output is routed away from the engine and back to tank. This forces the fuel control onto the acceleration schedule in order to maintain gas generator speed. The design of the system should ensure that with the bypass flowing the fuel control outlet pressure and flow at the OEI ratings are simulated. The bypass system can be either permanently installed and operated in flight, (Failure Malfunction Effects Analysis must be provided), or as an item of ground test equipment. The quantity of fuel bypassed should be equivalent to the worst case difference between fuel flow at the 30-second rating and typical power assurance power levels. However, trend monitoring and service history may provide the basis of an alternative to periodic measurement.

(2) Limiters. A means must be provided to assure that a lower than required (for OEI power) limiter setting does not exist. Limiters that could prohibit reaching OEI power are as follows:

(i) N_g - Maximum Compressor Speed Limiter or Governor

(ii) Measured gas temperature limiter

(iii) Output shaft torque limiter

(iv) N_p limiter or power turbine governor-power turbine governors can be verified at lower than OEI power conditions.

(v) Fuel flow limiter or maximum fuel flow stop-Fuel flow limiting has been addressed in previous paragraphs.

(3) Failure Modes and Effects Analysis. Failure modes and effects analysis, along with limited demonstration and suitable engine health monitoring procedures, may provide the basis of an acceptable solution to possible unexpected power limiting due to engine condition. It should be shown in the analysis that there is no probable event or combination of events which can cause a latent problem leading to inadequate fuel flow at high powers. The analysis should include all components of the fuel system such as: pump(s), control system (mechanical, hydromechanical, electronic, etc.) pipework, filters, fuel nozzle(s), and electrical interfaces. It should also address the probable effects of accumulated running time, dirty fuel, and hostile environment.

(4) High Corrected Gas Producer Speed.

(i) The proposed OEI ratings will cause the engine to run at high corrected gas producer speeds (Ng/). At high Ng , performance characteristics of components, especially in the compressor, can change significantly and to an extent which would change the extrapolation of low speed run line data.

(ii) In operation, the effects of the accretion of dirt, FOD, component deterioration, and erosion of blading may also cause changes in the high-speed performance of an engine.

(iii) The above effects must be considered when developing power assurance procedures and data.

(5) Special Devices.

(i) The satisfactory operation of devices or systems whose functioning is required in order to achieve the OEI powers should be verified. Devices or systems, which in normal operations are not exercised through the range of travel needed to achieve the OEI powers, may require special checks to assure adequate capability.

(ii) Special devices that are required only in order to achieve the OEI powers (for example, solenoids to provide additional cooling flow to hot-section components or a water/anti-freeze mixture into the compressor), should be subjected to periodic checks and have a demonstrated high reliability.

f. Airframe Considerations.

(1) Instrumentation Accuracy.

(i) The accuracy of any power assurance check is strongly dependent on the air data and engine parameters. SAE ARP 1217 (May 1979) provides guidance on the desired measurement accuracy for parameters used for engine health and diagnostic monitoring. The parameters to be considered with their respective functions include:

Pressure Altitude Flight Speed Free Air Temperature (stagnation)	Air data basis for establishing power plant inlet pressure and temperature
Torque Power Turbine Speed	Direct measurement of power output.
Gas Generator Speed(s) Measured Gas Temperature	Primary thermodynamic and limiting parameters
Fuel Flow	Secondary trend monitoring and potential limiting parameter

(ii) The overall power check accuracy can be assessed on a suitable statistical basis using equations that link the measured parameters and inserting system accuracy distributions for each value. This approach will provide an overall assessment of power check accuracy and will highlight major contributors to error. The accuracy assessment at each parameter should include the following elements:

Sensor error Indicator error Reading error	System error

(iii) This assessment might show that while conventional instrument displays of air data are acceptable, servo driven digital displays are desired for engine parameters. Further, displays that provide a “snapshot” of engine readings at a given moment may be useful in avoiding variation in power level during the finite period needed to manually read and log the set of parameters.

(2) Installation Loss Definition.

(i) Installation loss definition is an extremely important aspect of any form of rotorcraft engine performance. Engines are certificated and sold with uninstalled performance guarantees and estimates as to the power output capabilities. Installation of the engine in the rotorcraft imposes power output penalties that must be accounted for in any sort of power assurance check procedure. Normal practice dictates that the engine manufacturer provides a computer program that accurately predicts the engine power output capability throughout the approved flight envelope. This computer program has the capability to correct the power output for the losses incurred by the rotorcraft installation.

(ii) Losses that can reduce engine power available are as follows:

(A) Air intake total pressure loss

(B) Air intake total temperature rise

(C) Exhaust back pressure

(D) Accessory power extraction

(E) Compressor bleed air extraction

(F) Off-optimum power turbine output speed effects

(iii) The above items and methods of dealing with them are clearly defined in SAE Aerospace Recommended Practice (ARP) 1702. Typically, these losses will not be a fixed percentage but will vary with engine operating conditions and environment.

(iv) Any calculations involving power assurance data should use the approved engine performance program, and the rotorcraft losses should be input on a discrete basis so that the interaction between losses and their independent variability is properly considered. This approach is clearly defined in ARP 1702. Accurate consideration of the losses should produce a Power Assurance Check that will preclude premature removal of acceptable engines or continued operation of inadequate power plants.

g. Rotorcraft Flight Manual RFM).

(1) The Power Assurance Check data for the installed engine (engine data adjusted for inlet losses, exhaust losses, bleed extraction, power extraction, and off-optimum output shaft speed operation) should be presented in the RFM in an easily useable format. The data format may consist of charts of engine torque (at constant power turbine shaft speed) versus allowable values of gas generator speed and gas path temperature covering the range of ambient conditions for takeoff operations. Associated limitations for the rotorcraft transmission and the engine should be noted.

(2) The RFM should also:

(i) Include succinct statements of the reason for the Power Assurance Check and what must be done if the Power Assurance Check results are not acceptable.

(ii) Clearly state that Power Assurance Check either is a pre-takeoff or in-flight procedure, as required by operations, specifications and/or other approval authority documents.

(iii) Be kept simple, easy to use, and identify equipment operation limitations and requirements.

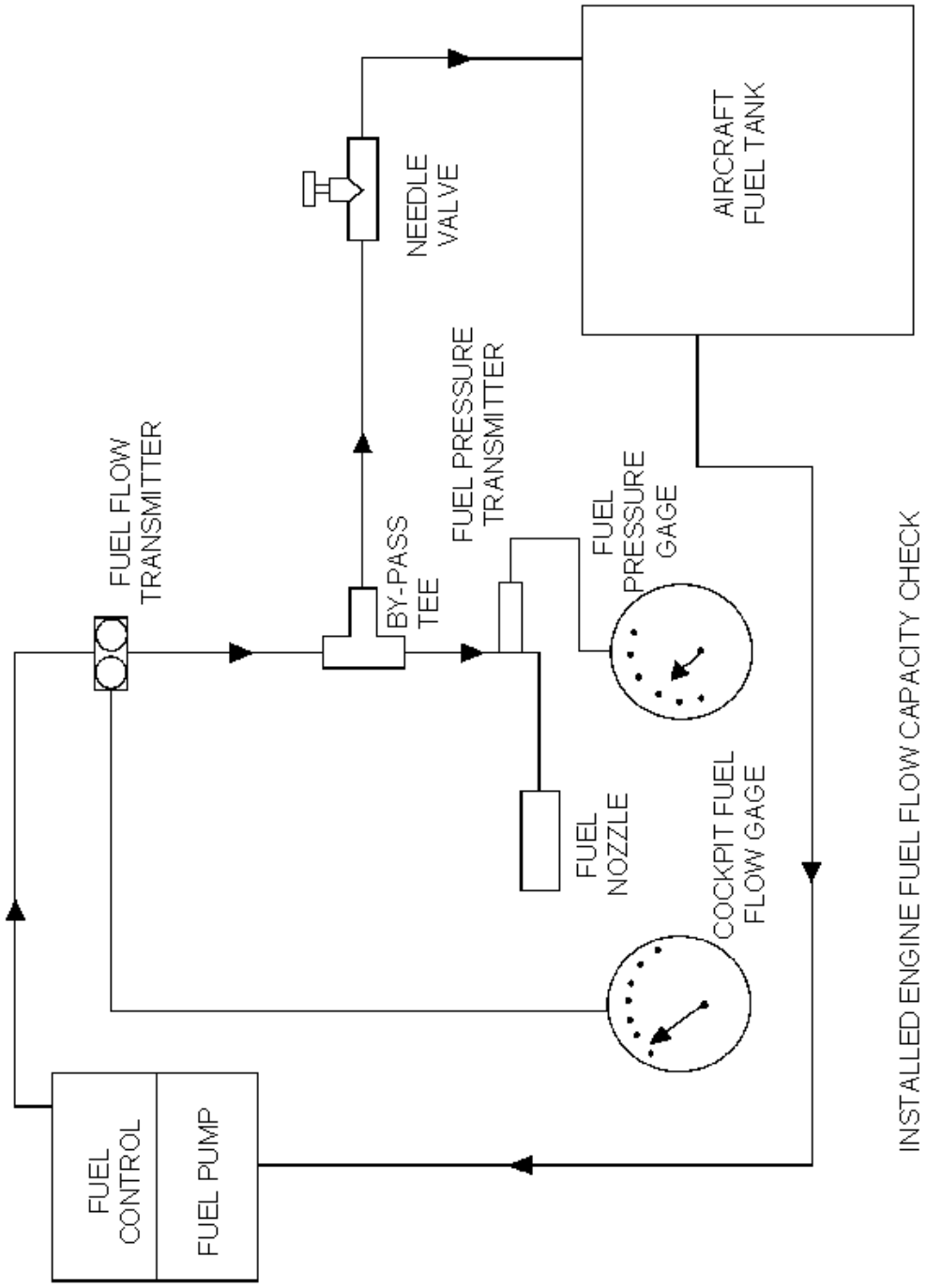

FIGURE AC 27.MG9-1

CHAPTER 3
AIRWORTHINESS STANDARDS
NORMAL CATEGORY ROTORCRAFT

MISCELLANEOUS GUIDANCE (MG)

AC 27 MG 10 ADVIISORY MATERIAL FOR SUBSTANTIATION OF EMERGENCY FLOTATION SYSTEM

a. Reference. FAR sections 27.521, .563(b), .751, .753(a)(1), (a)(2), .801(b),(d), .807(d).

b. Explanation.

(1) This section pertains to emergency flotation systems used to provide buoyancy for rotorcraft not specifically certificated for ditching but performing over-water operations. According to paragraph AC 27.801, ditching may be defined as an emergency landing on the water deliberately executed with the intent of abandoning the rotorcraft as soon as practical. Currently, ditching certification is not required by FAR 27; however, certification requirements are prescribed for applicants requesting ditching certification approval. If a rotorcraft operates over water during a Part 135 operation, the rotorcraft must comply with FAR 135.183, which may require floats.

(2) There are no airworthiness rules specifying the minimum standards for emergency flotation systems on rotorcraft not certificated for ditching requirements. Equipment presented for evaluation must perform its intended function and not create a hazard for the rotorcraft or occupants. The objective in evaluating emergency flotation systems is safe flight and evacuation of the rotorcraft in emergency situations. Adequate emergency flotation systems would aid in keeping rotorcraft sufficiently upright and in adequate trim to permit safe and orderly evacuation in an emergency water landing.

c. Procedures. The following guidance criteria is based on past certification policy and experience for emergency flotation systems. Demonstration of compliance to other criteria may produce acceptable results if adequately justified by rational analysis. Model tests of the appropriate emergency water landing configuration may be conducted to demonstrate satisfactory flotation and trim characteristics where satisfactory correlation between model testing and flight testing has been established. Model tests and other data from rotorcraft of similar configurations may be used to satisfy the water requirements where appropriate.

(1) Flotation Systems.

(i) Normally inflated. The flotation systems which are normally inflated and intended for emergency use only, should be evaluated for:

(A) Structural integrity when subjected to:

(1) Air loads throughout the approved flight envelope with floats installed,

(2) Water loads during water entry, and

(3) Water loads after water entry at speeds likely to be experienced after water impact.

(B) Rotorcraft handling qualities throughout the approved flight envelope with floats installed.

(ii) Normally deflated. Emergency flotation systems which are normally stowed in a deflated condition and inflated either in flight or after water contact during an emergency water landing should be evaluated for:

(A) Inflation.

(1) Proper Inflation. The inflation system design should minimize the probability of the floats not inflating properly or inflating asymmetrically. This may be accomplished by use of a single inflation agent container or multiple container system interconnected together. Redundant inflation activation systems will also normally be required. If the primary actuation system is electrical, a mechanical backup actuation system will usually provide the necessary reliability. A secondary electrical actuation system may also be acceptable if adequate electrical system independence and reliability can be documented.

(2) Inadvertent actuation. The inflation system should be safeguarded against spontaneous or inadvertent actuation for all flight conditions. It should be demonstrated that float inflation at any flight condition within the approved operating envelope will not result in a hazardous condition unless the safeguarding system can be shown to be reliable. Limitations to the approved envelope can be established so inadvertent actuation does not impose a hazard at the new envelope.

(3) Float actuation. The float activation means may be fully automatic or manual with a means to verify primary actuation system prior to each flight. If manually inflated, the float activation switch should be located on one of the primary flight controls. These activation means should be safeguarded against spontaneous or inadvertent actuation for all flight conditions.

(4) Flight Limitations. Maximum airspeeds for intentional in-flight actuation of the float system and for flight with the floats inflated should be established as limitations in the Rotorcraft Flight Manual (RFM) unless in-flight actuation is prohibited by the RFM.

(5) Inflation time. For floats inflated automatically by water contact, inflation time from actuation to neutral buoyancy should be short enough to prevent the rotorcraft from becoming submerged to the point where egress is impeded.

(6) Pressure checking. A means should be provided for checking the pressure of the gas storage cylinders prior to each flight. A table or device showing acceptable gas cylinder pressure variation with ambient temperature and altitude (if applicable) should be provided.

(7) Over inflation. A means should be provided to minimize the possibility of over inflation of float bags under any reasonably probable actuation conditions.

(8) No puncture inflation. The ability of the floats to inflate without puncture when subjected to actual water pressure should be substantiated. A full scale rotorcraft immersion demonstration in a calm body of water is one acceptable method of substantiation. Other methods of substantiation may be acceptable depending upon the particular design of the flotation system.

(9) Flotation bag containment. Float installations should be evaluated to ascertain that emergency exits are not blocked by the inflated floats when the float bags are inflated to their maximum inflation pressure or their most adverse inflation pressure for emergency exits and the rotorcraft at its most critical weight and center of gravity configuration.

(B) Structural Integrity. The flotation bags should be evaluated for loads resulting from:

(1) Airloads during inflation and fully inflated during the most critical flight conditions and water loads with fully inflated floats during water impact for the rotorcraft desiring float deployment before water entry; or

(2) Water loads during inflation after water entry.

(C) Handling qualities. Rotorcraft handling qualities should be verified by tests or analysis to comply with the applicable regulations throughout the approved operating envelopes for:

(1) Deflated and stowed condition,

(2) In-flight inflation condition

(3) Fully inflated condition, and

(4) Partially inflated condition, assuming the most critical float compartment fails to inflate.

(2) The float system attachment hardware should be shown to be structurally adequate to withstand critical air loads and water loads during water entry when both deflated and stowed and fully inflated (unless in-flight inflation is prohibited). The appropriate vertical loads and drag loads determined from water entry conditions (or as limited by flight manual procedures) should be addressed. The effects of the vertical loads and the drag loads may be considered separately for the analysis.

(3) Flotation and Trim should be investigated for a range of sea states from zero to the maximum selected by the applicant and should be satisfactory in waves having height/length ratios of 1:12.5 for multi engine rotorcraft with Category A engine isolation and 1:10 for all other rotorcraft.

(i) Demonstrated to be satisfactory to at least sea state 4 water conditions.

(ii) Flotation tests should be investigated at the most critical rotorcraft loading condition.

(iii) Flotation time and trim requirements should be evaluated with a simulated, ruptured deflation of the most critical float compartment. Flotation characteristics should be satisfactory in this degraded mode to at least sea state 2 water conditions.

(iv) Probable rotorcraft door/window open or closed configurations and probable damage to the airframe/hull (i.e., failure of doors, windows, skin, etc.) should be considered when demonstrating compliance with the flotation and trim requirements.

(4) Float System Reliability. Reliability should be considered in the basic design to ensure approximately equal inflation of the floats to preclude excessive yaw, roll, or pitch in flight or in the water.

(i) Maintenance procedures should not degrade the flotation system (such as introducing contaminants which could affect normal operation, etc.).

(ii) The flotation system design should preclude inadvertent damage due to normal personnel traffic flow and excessive wear and tear. Protection covers should be evaluated for function and reliability.

(5) Buoyancy requirements for emergency flotation systems should be a minimum of 25 percent excess buoyancy at maximum internal gross weight. The weight of fresh water (density 62.42 lb/ft^3) displaced by fully submerged float or floats should be a minimum of 25 percent greater than the maximum certificated gross weight of the rotorcraft. Analysis may be used for buoyancy verification.

(6) Sufficient watertight compartments should provide an acceptable margin of positive stability with any single main float compartment flooded or deflated. The location of the floats, the most critical compartment, the rotorcraft weight, mass moment of inertia, and center of gravity location are also important considerations for stability. Analyses, tests, or a combination thereof may be used to substantiate a positive margin of stability with the most critical compartment flooded or deflated.

(7) The inflatable bag type floats should be designed for the maximum pressure differential developed at the maximum design altitude. That is, the resulting pressure difference between an operational altitude and a take-off site elevation should be established and substantiated. This resulting pressure differential may become an operating limitation.

(8) The float landing load factors may be determined from the drop test of the float landing gear or the loads may be derived from landing gear drop test or loads may be determined from model or full scale water entry tests. The vertical loads are distributed over three fourths of the bag's projected area. Bag floats are not subject to the side loads. Rigid floats are to be designed for vertical, horizontal, and side loads distributed along the length of the float.

(9) Design and/or support of the forward part of bag type floats should be evaluated for maximum design speeds to prevent collapse or significant distortion of the bag while in flight.

(10) Resistance to puncture and abrasion at attach/wear points is an important design consideration. Girt or attachment design loads should be sufficient to withstand the maximum imposed design loads.

(11) Occupant Egress and Survival. Each practicable design measure should be taken to minimize the probability that the behavior of the rotorcraft would cause immediate injury to the occupants or prevent evacuation of the rotorcraft after an emergency landing on water. Emergency exits should be located such that they are above the waterline and will not be blocked by the inflated or partially inflated floats, impeding evacuation of the rotorcraft. The flotation time and trim of the rotorcraft should allow the occupants to evacuate the rotorcraft. i.e., the rotorcraft should remain sufficiently upright and in adequate trim to permit safe and orderly evacuation of all personnel. For configurations which are considered to have critical occupant egress capabilities due to float proximity, an actual demonstration of egress may be required. When a demonstration is required, it may be conducted on a full-scale rotorcraft actually immersed in a calm body of water or using any other rig/ground test facility shown to be representative. The demonstration should show that floats do not impede a satisfactory evacuation.

(12) Rotorcraft Flight Manual. The Rotorcraft Flight Manual should contain the information pertaining to the emergency flotation system. This material should include:

(i) The information pertinent to the limitations applicable to the emergency float system and operating limitations for the emergency float system,

(ii) Procedures and limitations for flotation device inflation,

(iii) Procedures for use of emergency flotation equipment, and

(iv) Procedures for emergency water landing occupant evacuation.

CHAPTER 3
AIRWORTHINESS STANDARDS
NORMAL CATEGORY ROTORCRAFT

MISCELLANEOUS GUIDANCE (MG)

AC 27 MG 11 FATIGUE EVALUATION OF ROTORCRAFT STRUCTURE

a. Purpose. This revision to the advisory circular sets forth acceptable means of compliance with the provisions of Federal Aviation Regulations, §§ 27.571 and 29.571, dealing with the fatigue safe-life evaluation of metallic rotorcraft structure. The previous general guidance for fail-safe methodology is retained herein, as this approach also remains an option for compliance with Federal Aviation Regulation, § 27.571. General guidance and some background to fatigue evaluation issues are also provided. Guidance for evaluation of composite structure may be found in Chapter 3, AC 27 MG 8, AC No. 20-107A, and AC 29-2C.

b. Background. The fatigue evaluation procedures outlined in this advisory circular are for guidance purposes only and are neither mandatory nor regulatory in nature. Although a uniform approach to fatigue evaluation is desirable, it is recognized that in such a complex problem, new design features and methods of fabrication, new approaches to fatigue evaluation, and new configurations may require variations and deviations from the procedures described herein. Engineering judgment should therefore be exercised for each particular application. The flight structure of the rotorcraft is subject to cyclic vibratory stresses in practically every regime of flight. In addition, since it is a highly maneuverable aircraft that is capable of forward, rearward, sideward, vertical, and rotational flight, operating limitations due to fatigue are possible in practically all flight situations. For these reasons, it is required that special attention be focused on the fatigue evaluation of the flight structure of the rotorcraft.

(1) Fatigue evaluation of the flight structure is intended to verify structural reliability. Assurance of structural reliability starts with design, including choice of materials for resistance to crack initiation and/or propagation, detail design to minimize stress concentration, and specification of surface finishes, fits, etc. Design analysis should include estimation of expected flight loads, and estimation of resistance to fatigue. Fatigue strength should be based on past full-scale fatigue tests and/or materials fatigue data with appropriate reductions for the variability in fatigue strength, size, shape, surface finish, and environments of the structure. In addition, design for fatigue should consider mode-of-failure analysis, areas susceptible to fatigue cracking, and methods to assure detectability of fatigue cracks; when fail-safe design is the chosen method. The residual strength of a cracked structure is an important consideration of fail-safe design.

(2) Assurance of structural reliability also includes manufacture and fabrication in accordance with design requirements and specifications, quality control to monitor compliance, and effective service inspection procedures.

(3) Fatigue evaluation of the structure, measurement of flight loads and stresses, and evaluations of fatigue strength and/or fatigue crack propagation are the subjects of this advisory circular. There is some question whether a completely reliable method for the prediction of time to fatigue crack initiation and fracture exists. Nevertheless, one engineering approach to the subject is to use the "Linear Cumulative Damage Hypothesis." This hypothesis states that every cycle of stress above an "endurance limit" produces fatigue damage proportional to the ratio of cycles accumulated at the stress to fatigue "life" at that stress.

(4) Laboratory tests of this hypothesis indicate that it is reasonably valid when the loading spectrum consists of stresses that are, in effect, random. Despite the lack of an adequate theory connecting this hypothesis with more basic properties of materials, it has been successfully used in a number of applications to calculate a safe-life retirement time.

(5) In addition, fatigue evaluation generally requires a method of accounting for the effect of steady loads and stresses on fatigue. Where the manufacturer does not provide other substantiating data, a Goodman diagram may be used to account for these effects.

(6) In any rational fatigue evaluation, the following factors should be considered:

(i) Identification of the structure to be considered in the fatigue evaluation. Those elements of the rotorcraft structure that may be critical in fatigue should be identified. Typical elements include:

(A) Rotor blades and attachment fittings.

(B) Rotor heads, including hubs, hinges, dampers.

(C) Rotor drive components, including gearboxes and transmission shafts.

(D) Control system components, including control rods, servos, swashplates.

(E) Rotor supporting structure.

(F) Primary flight and ground load paths of the fuselage, including landing gear, lift frames, stabilizers and auxiliary lifting surfaces.

(ii) The loads and stresses associated with steady and maneuvering operating conditions expected in service.

(iii) The frequency of occurrences associated with various flight conditions and the corresponding spectrum of loading and stresses.

(iv) The fatigue characteristics of the structure, including fatigue strength, and as necessary, crack propagation and residual strength characteristics.

c. Flight Load Measurement Program.

(1) General. Subsequent to design analysis, in which aircraft loads and associated stresses are derived, the stress level and/or loads are to be verified by a carefully controlled flight load measurement program. The flight load measurement program shall demonstrate maximum and minimum loads for the entire flight envelope. It shall also gather steady and cyclic load/strain data for use in the fatigue evaluation required by §§ 27.571 and 29.571. The parameters to be measured are primarily load calibrated strains supported by local strain measurement, accelerations, and deflections as necessary.

(2) Instrumentation.

(i) The instrumentation system used in the flight parameter measurement program should accurately measure and record the critical parameters under operational test conditions. For critical maneuvers, the instrumentation should be capable of recording data sequences for several related channels for stationary and rotating channels. The location and distribution of the strain gauges should be based on a rational evaluation of the critical stress areas. Appropriate analytical methods should be used, such as Finite Element Modeling (FEM) and may be supplemented by other techniques including strain sensitive coatings, photoelastic methods, and thermography. Manual calculations based on the historical precedent of similar structure can also be very helpful. As much as possible, the instrumentation plan should standardize the gauge locations for each component so that all testing and other experience can be related to the same common set of measurement parameters. The gauge sensitivity, frequency response, location, distribution, and number of strain gauges must provide the strain/load spectrum and strain/load distribution for each part essential to the safe operation of the rotorcraft.

(ii) The corresponding flight and ground operation parameters (airspeed, rotor RPM, center of gravity accelerations, etc.) should be recorded simultaneously and, where appropriate, as time histories. This is necessary to correlate the loads and stresses with the maneuver or operating condition during which they occurred. If the number of data parameters required exceeds the system capability, enough “carry-over” data channels should be included to reasonably relate all data for the specific maneuver when several flights are necessary.

(iii) The instrumentation system should be adequately calibrated and checked frequently during the strain survey. Ideally this would occur at the beginning

and end of a flight. Strain gauges should be temperature compensated where necessary.

(iv) In the case of calibrated structure, rational evaluation of the calibration rig procedure should be performed to demonstrate that strain-load response is representative over the range of flight maneuvers and operational parameters that are to be encountered. As a minimum, the calibration fidelity should address the loading distributions applicable to the critical failure modes of the component under evaluation and over a high percentage of the maximum expected flight load. Care should be taken to ensure that any non-linear behavior is identified and properly considered.

(3) Parts Subject to Flight Measurement. Sufficient parameters of the rotor systems, drive systems, control systems, fuselage, and supporting structure for rotors, transmissions, engines, APU's, and other dynamic components should be measured to adequately define and substantiate the loading of these components. For rotorcraft of unusual or unique design or operation or employing unusual equipment, special consideration should be given to the unique features and also the effects they may have on existing systems and structure.

(4) Flight Regimes and Operational Conditions to be Investigated.

(i) Typical flight and ground conditions to be investigated are given in Figure AC 27.MG 11-7 for conventional passenger/utility use and additional conditions in Figure AC 27.MG 11-8 for a lifting operation. For intensive lifting missions it should be recognized that lifting conditions for both internal and external loads should be investigated including landing with and without load as applicable. Figures AC 27.MG 11-2 and AC 27.MG 11-3 show flight regimes that should be investigated for power-on and power-off operation for all helicopters. Parameters, which define these regimes, are included in these figures. Other parameters such as Gross Weight and C.G. apply and should be included. The effects of temperature and of high altitude operation or altitude cycling should be investigated. As noted on Figure AC 27.MG 11-2, complete coverage at 111 percent V_{NE} should be demonstrated for power-on operation. However, for power-off operation, Figure AC 27.MG 11-3, complete coverage at 111 percent V_{NE} for maximum and minimum design RPM need not be obtained if points are obtained at V_{NE} at both maximum and minimum design RPM and at 111 percent V_{NE} at both maximum and minimum placarded RPM as indicated in the figure. Conditions arising out of special requirements such as those imposed by noise reduction and near surface operation should also be investigated.

(ii) The determination of the flight conditions to be investigated in the flight strain measurement program should be based on the anticipated uses of the helicopter. Information from similar designs and/or similar operations should be assessed and used where applicable. Flight conditions considered appropriate for the design and application must be representative of actual operation in accordance with the rotorcraft flight manual. For multi-engine helicopters, the flight conditions concerning engine out operations should be considered in addition to complete power-

off operation. For heavy lift and external-lift helicopters the loaded and unloaded conditions of operation should be investigated in conjunction with other important parameters. When the mission being evaluated involves the use of a long line, the flight strain survey should be flown with a long line. This will insure that the correct rotor and control loading will be duplicated particularly in hover and low speed maneuvers since the c.g. offset, drag, and inertia effect of the external load can be a factor in dynamic loads. Generally the V_{NE} when performing external cargo missions is reduced because of safety or other reasons. In addition, for these uses, and others where the operation requires frequent excursions to the proposed limitations of the rotorcraft, reasonable consideration should be given to unintentional exceedences and the development of these limits. The extent of the assessment would generally be founded on experience, but also acknowledging tolerances in instrumentation and the circumstances of the operation, particularly the level and focus of pilot workload. Similarly the effects of structurally significant maintenance should be investigated as necessary, particularly where unusually large load amplifications could be expected as a consequence and the probability of occurrence is shown or believed to be substantial based on experience. Operating limitations and maintenance instructions may be adjusted on the basis of these investigations. For all rotorcraft the effects of ground operation should be investigated. The ground and flight conditions to be investigated should be submitted as part of with the flight evaluation program.

(iii) The severity of maneuvers investigated during the flight strain survey should be such that it is extremely unlikely that service use will be more severe. In this evaluation, flight replications should be investigated during the load survey so that normal and expected variations in achieving the specific target flight test conditions are accounted for.

(iv) The extremes of aerodynamic configuration, including operation with doors off or open and simultaneous use of equipment, should be investigated as well as the usual parameters. In addition, when the rotorcraft is equipped with externally mounted devices such as rescue hoist, spotlight, camera, infrared sensors, etc. it is necessary to evaluate the loads. These or similar devices can increase the profile drag thus increasing power required. Additionally, the airflow from these devices can impinge on the tail boom, fin or tail rotor altering the loads determined for the clean aerodynamic configuration. When these devices are installed by a modifier as a Supplemental Type Certificate (STC), it is the responsibility of the STC holder to investigate any effects the device may have alone or in combination with other externally mounted devices.

All flight conditions considered appropriate for the particular design are to be investigated over the complete rotor speed, airspeed, longitudinal and lateral center of gravity, altitude and weight (from minimum mission weight to maximum mission weight) ranges to determine that the critical loads/stresses associated with each flight condition are identified. Typical damaging flight conditions for main rotor components and suspension include, but are not limited to: high speed flight, turns, pull-ups, sideward flight, approach, autorotation, taxiing, take off and landing on slopes. For tail rotor

components, typical flight conditions to evaluate include, but not limited to: spot turns in hovering, sideward flight or level flight with sideslip. In order to account for data scatter and to determine the load/ stress levels present, a sufficient amount of data points should be obtained at each flight condition. In some instances, the critical weight, center of gravity, and altitude cases for the various maneuvers can be based on validated flight loads analysis or on past experience with similar designs. This procedure is acceptable where adequate flight tests are performed to substantiate such selections. The combinations of flight parameters that produce the most critical load/stress levels should be included in the fatigue evaluation. In addition attention should be paid to the influence of temperature through the whole range certified, especially to very cold temperature (typically below -30°C [= -20°F]). For example, the characteristics of elastomeric components in rotor assemblies are particularly sensitive to temperature change. This influence can be evaluated either in flight during a cold weather campaign or by analysis based on elastomer characteristics such as stiffness and damping measured in a cold temperature chamber.

d. Frequency of Occurrence (Usage) Spectrum.

(1) General. The frequency of occurrence spectrum (often called usage spectrum) defines the maneuvers the rotorcraft will perform in the various types of operation, and the percentage time or number of events associated with each maneuver. The diversity of rotorcraft sizes and speed together with the wide range of passenger/cargo capability requires that a comprehensive evaluation of each possible mission scenario be accomplished for each rotorcraft model. Some of the most common types of operation include transport, offshore support, traffic reporting, emergency medical services (EMS), law enforcement, search and rescue, agricultural spraying and external sling operation. Each of these operations has unique requirements in terms of maneuvers, gross weight/center of gravity and altitude. However, each helicopter model may fly one or more of these operations throughout its operational lifetime. Replacement times should account for the worst case operation for each component, unless a method approved by the Authorities is developed which allows consideration of multiple type of operations by factoring hours or counting events.

(2) Spectrum Development. The frequency of occurrence spectrum should be based on information that is applicable to the mission(s) the rotorcraft is to perform. All damage that is likely to occur in actual usage should be accounted for including low cycle damage from power cycles and the ground-air-ground (GAG) cycle. This information may come from direct measurement of usage data from the same or similar rotorcraft, usage monitors, questionnaires or direct observation of the helicopter performing the mission. Design limitations established in compliance with §§ 27.309 or 29.309 and any recommended operating conditions and limitations established and specified in the rotorcraft flight manual should also be reflected in the spectrum. An example of a twin turbine spectrum is presented in Figure AC 27.MG 11-9. This table should be used only as a guide and should be modified as necessary for each particular rotorcraft. An example of the diversity in the frequency of occurrence spectrum is

illustrated by comparing percentages of time assigned to level flight conditions for three different rotorcraft types as shown in Figure AC 27.MG 11-1 below:

Piston Utility			**Turbine Utility Business**			**Twin Turbine Transport**	
0.8 V_{NE}	25%		0.8 V_H	16%		0.8 V_H	15%
1.0 V_H	15%		0.9 V_H	21%		0.9 V_H	20%
1.0 V_{NE}	3%		1.0 V_H	24%		1.0 V_H	38%
TOTAL	43%			61%			73%

FIGURE AC 27.MG 11-1 Example of the variation in time spent in level flight for three rotorcraft types.

Not only are the totals different for the different rotorcraft types but the distributions of time are also significantly different. This can become an important factor in the determination of fatigue lives, whether or not there are damaging loads in level flight, depending on how the time spent in other maneuvers is subsequently proportioned. A conservative approach to the spectrum development should be taken. It is suggested that a sensitivity study be conducted to determine the variability of component lives to different assumed percent times for level flight. This same procedure might also be used for other elements of the spectrum where significant fatigue damage is incurred. The results from such a study may be used to influence the spectrum or the replacement time assigned to the component(s).

(3) External Load Operations. The unique ability of a rotorcraft to hover makes it particularly useful in moving external cargo. External load operation can be a demanding mission requiring the maximum lifting and power capability of the rotorcraft at a high rate. For example, a logging operator may use up to 50 maximum power cycles per flight hour to move logs from a cutting site to a hauling site. The power reaches a maximum limit when the load is lifted and the rotorcraft accelerates. The power reaches a minimum during the descent and will peak again if the rotorcraft decelerates and transitions to hover to release the load. Other external cargo operations with similar characteristics are fertilizer spreading, water bucket operations, and replenishment of remote oil exploration sites, etc. These power excursions are particularly critical for the rotorcraft drivetrain components. The impact of external load operation should be assessed to determine if replacement times would be affected.

(4) Management of Replacement Time.

(i) The lowest calculated life obtained from all flight loads data and loading spectrum (including external load operations) is generally the basis for establishing the replacement time of the component(s). Regulatory maintenance and operating rules do not require recording time-in-service for different types of operations.

However, it may be possible to adjust replacement times by counting events or by factoring flight hours for certain types of operation. Any such procedure will require the approval of the certification authority for a suitably amended airworthiness limitation section and should also consider the operational aspects involved. For example, a component where significant damage occurs during the GAG or power cycle may more appropriately be assigned a life in terms of the number of cycles of takeoffs or lifts in lieu of tracking flight time in hours. The cycles should be properly defined and related to events that are easily identified and recorded by the crew or by an approved usage monitor (e.g., takeoffs or lifts). This example procedure would retire the component sooner when it is used in an external load operation mission involving many cycles per flight hour. Conversely, an operator performing a less severe operation standard mission could leave the component in service longer since fewer cycles are accumulated. This procedure would permit the rotorcraft to be used for different types of operations and still ensure a safe replacement time for the component.

(ii) Where appropriate, some of the basic usage assumptions made in the fatigue evaluation which the operator can reliably assess (such as numbers of ground air ground cycles) should be noted in the airworthiness limitations section of the maintenance manual. The intent of this would be to make operators aware of these criteria so that appropriate actions may be taken.

(iii) Should subsequent usage of the rotorcraft encompass an operation for which the original structural substantiation did not account, the effects of this new operation should be addressed, and in the interests of safety, a reassessment made. Subsequently, if the replacement times require revision, those new times may be limited to aircraft involved in the new operation provided:

(A) Proper part re-identification is established;

(B) a rotorcraft flight manual supplement outlining limitations is approved;

(C) an airworthiness limitations section supplement is approved; (this is also required for incorporation of new methods for managing replacement times, see paragraph d4(i) above); or,

(D) a combination of the above.

e. Fatigue Life Evaluation.

(1) General. Information for fatigue evaluation based on safe-life considerations leading to replacement times is provided in this section. Although there is a large quantity of information available on the fatigue strength characteristics of material specimens, built-up specimens and parts, the prediction of the strength of parts of new designs based on this information is less accurate than testing the actual part. Consequently, for an analysis based on test data other than the actual part to be considered acceptable, additional conservatism should be used to achieve similar levels

of reliability and safety as obtained with a full scale test approach. However, in many cases the differences between past test specimens and the actual part (which involve such factors as stress concentration, size, and fretting) cannot be accounted for with a reasonable degree of accuracy. Therefore, it is usually necessary that the structural components be subjected to repeated load tests using information determined in the flight load measurement program. Special operational or functional characteristics that could affect the fatigue strength should also be considered in the service life evaluation. Such factors as high blade operating temperatures due to tip jets or turbine exhaust impingement on the tail rotor should be considered as well as other special operating conditions. In addition, effects of special purpose use such as hoist and external operation, spraying, surveying, etc., should be considered if appropriate to the particular type. The fatigue strength may be evaluated using the methods outlined below, of which full scale testing is the preferred method.

(2) Analytical Methods

(i) Simplified method. This method requires that an operating boundary for stress levels be established. The following techniques that account for the effects of cyclic and steady stresses are considered acceptable for establishing the allowable stress levels:

(A) The mean endurance limit of the part should first be estimated from simple material test specimens. The test specimen material should be representative of the actual part and sufficient test data should be available to substantiate a mean endurance limit (the reference specimen endurance limit, Line AD of Figure AC 27.MG 11-4). A range of cycles from 10^7 to 10^9 may be appropriate to estimate the endurance limit dependent on the material. The estimate should account for surface conditions, fabrication methods, fretting, size and shape effects, and environmental conditions, as well as differences in stress concentrations between the test specimen and the actual part. Referring to Figure AC 27.MG 11-4, the endurance limit of the part may be represented by a straight line drawn through the yield stress (point D on the horizontal axis) and the mean endurance limit from test results, suitably adjusted to account for the considerations detailed above, at a given steady stress. The intersection of this line with the vertical axis is point B. This produces the adjusted specimen endurance limit, line BD.

(B) A factor or safety of 3 should then be applied to the adjusted specimen endurance limit so that the slope of line CD (the operating boundary) would be 1/3 of line BD.

(C) If all operating stress cycles fall below the operating boundary line (CD), no fatigue testing is necessary. When any of these stresses are above the operating boundary line, fatigue testing of the actual parts should be conducted, unless a suitably conservative approach such as that outlined in d(4)(ii) is adopted.

(D) Caution should be exercised in the application of the analytical method above, particularly when the following items are involved:

(1) Irregularly shaped parts containing numerous or super-imposed fillets, holes, threads, or lugs.

(2) Large parts in proportion to the laboratory specimens.

(3) Parts or unique design for which no past service experience is available.

(4) Parts subject to fretting.

(5) Bolted or pinned connections.

(6) Complex castings.

(7) Welded sections.

(8) New materials or processes without precedent of use.

(ii) Rational methods. The previous simplified method can be overly conservative, especially when only ground-air-ground cycles or very high loads associated to very low occurrences fall over the operating boundary line defined in paragraph e(2)(i) above. Consequently methods may be used which do not involve full scale testing but which apply the same principles of calculation of retirement times, based on:

(A) An S/N curve shape representative of the material of the component.

(B) A mean fatigue limit representative of the component, considering as necessary, the steady flight loads, fretting effects, and all the other influential parameters of paragraph e(2)(i)(A).

(C) An appropriate factor applied to the mean fatigue strength to produce a working limit (typically 1/3 of mean strength).

(D) Consideration of all the loads from the complete flight loads spectrum.

(E) The use of the Miner linear cumulative damage hypothesis, including both low cycle and high cycle fatigue damages.

(iii) In order to provide an acceptable alternative to the fatigue testing and simplified analytical methods, these rational methods should be based on a validated stress analysis. Finite element model correlated to strain gauge measurements for example, or previous experience of similar designs may be acceptable. The material

fatigue behavior should be well established for each application. It is important to apply the chosen method consistently and should any of the analyses identify the need for a replacement time, testing should be conducted to support the assumptions made. The certifying authority should approve these rational methods.

(3) Testing Methods. The fatigue strength of the flight structure may be determined in appropriate laboratory tests and evaluated in terms of the loading spectrum. The mean strength indicated by the test results should be reduced by a factor or factors such that the probability of occurrence of a lower strength part in service is very low. This conservative treatment of strength combined with a conservative treatment of both the flight loads (paragraph c.) and their frequency of occurrence (paragraph d.) must assure that the probability of failure is extremely remote. All test articles should be fully representative of the design standard selected for evaluation, including the processes used in manufacture. The test fixture should be capable of applying the loading conditions in a way that loads the component in the same manner as when on the rotorcraft. The test loads developed in the component should be correlated with those measured in the flight load survey.

(i) S/N Curves. Constant amplitude fatigue tests should be conducted to define the mean strength. Whenever possible several S/N data points should be established for each of a number of different alternating load levels. The fatigue tests should be performed at mean stresses or loads representative of those occurring in flight. In addition, some components subjected to both dynamic and low cycle loading, for example a main rotor blade, may require the addition of a start-stop or GAG cycle testing, and the resulting fatigue damage included in the component life determination. In order to determine the mean fatigue strength, it is necessary to test actual components. These tests will allow the construction of the mean S/N curve when combined with an established curve shape. The S/N curve shape may be derived by using a least square fit curve through coupon data or appropriate published material data. Care should be taken in the selection of curve shape, particularly when fretting is present. Then, to account for fatigue strength variability, the mean curve must be reduced to a working curve. In establishing the working curve, consideration should be given to the number of specimens tested, the variability of the fatigue results, previous test data on the same material or similar components, as well as service experience. At least four full-scale specimens are recommended, but fewer may be adequate in association with a conservative approach to establishing the working curve considering the reduction in reliability this infers. Current practice shows that when four or more specimens are used, the resulting working curve (Figure AC 27.MG 11-5) can range from 51% to 70% of the mean curve in strength for aluminum alloys and 56% to 75% for steels. The successful application of the resulting working curves will depend on the degree of conservatism shown in the flight loads and occurrence spectra. Therefore it follows that use of the least conservative of these working curves would necessitate the greatest conservatism in the flight loads and assumptions relating to likely operational use. Consideration should also be given to fatigue life reduction factors when constructing the working curve. Typical factors range from around four to ten at less than 100,000 cycles. It may be possible to determine reduction factors from a large

database of historical test data of components with similar characteristics. Care should be exercised when pooling such data to be sure that difference in failure modes and curve shapes are considered. Whatever reduction factor is selected, a rationale should be provided to substantiate it. The reduced S/N curve and the loading spectrum developed per paragraph c. and d. should be used in determining replacement times, see paragraph e(4).

(ii) Spectrum tests. The establishment of replacement times based on fatigue tests in which each specimen is subjected to a spectrum of loading is to include the following considerations:

(A) Definition of the test loading spectra based on either:

(1) Load histories based on flight test data obtained for flight and ground conditions and maneuvers considered appropriate for the particular rotorcraft, and a spectrum allocating percentages of time or frequencies of occurrence to these flight and ground conditions and maneuvers, or

(2) Analysis supported by extrapolation of available load history data or prior knowledge where available.

(B) The effects of high infrequent load cycles on the test result particularly when such cycles may occur only rarely in service.

(C) The effects of omitting low load (high frequency) cycles to reduce test time should be fully established and supported by test experience to be adequately accounted for.

(D) Fatigue tests in which the loading spectra are applied such that effective randomization of loading is obtained.

(E) Assignment of replacement times. The fatigue test results should be evaluated in terms of the loading spectrum of paragraph d. if different to the test spectrum, and reduced by factors for strength and life based on similar approach to those derived for the constant amplitude tests above.

(4) Safe-Life Calculation Methodology. The key procedures for safe life determination, as shown hereafter, are based on the three basic elements of strength, loads, and usage as established in the preceding sections. These elements are reiterated below and combined according to Figure AC 27.MG 11-6 to calculate the retirement life: 1) The conservative working S/N curve developed from the mean S/N strength curve of the component using reduction factors based on the material and manufacturing variability and test parameters. 2) Loads and usage combined in an individual fatigue loads spectrum for the component determined conservatively through test and analysis. The loads may be processed by conservative methods using maximum load for the duration of each condition or by suitable cycle counting methods.

GAG cycles, once per maneuver cycles, and other high load cycle events should be accounted for as the loads are combined with the established usage spectrum. The service life of the component may then be determined using Miner's linear cumulative damage rule, considering both high and low cycle fatigue damage. The calculated service life obtained for a total damage equal to one is then the maximum allowable replacement time for the component.

f. Fail-Safe Evaluation.

(1) General. The fail-safe evaluation of the flight structure is intended to ensure that, should fatigue cracks initiate, the remaining structure will withstand service loads without failure until the cracks are detected. The fail-safe evaluation generally encompasses establishing the components which are fail-safe, defining the loading conditions and extent of damage for which the structure is to be designed, conducting structural tests and analysis to substantiate that the design objective has been achieved, and establishing inspection programs to assure detection of fatigue damage. Design features that may be used in attaining a fail-safe structure are:

(i) Selection of materials and stress levels that provide a controlled slow rate of crack propagation combined with high residual strength after initiation of cracks.

(ii) Design to permit detection of cracks, including the use of crack detection systems, before the cracks result in an appreciable loss of residual strength.

(iii) Use of multi-path construction and the provision of crack stoppers to limit the growth of cracks.

(iv) Use of composite duplicate structures so that a fatigue crack or failure occurring in one element of the composite member will be confined to that element and the remaining structure will still possess limit load-carrying ability. It may be necessary to employ the design techniques of f(ii) above to assure effectiveness of these features.

(v) Use of backup structure wherein one member carries the entire load, with a second member available and capable of assuming the load if the primary member fails.

(2) Extent of Fail-Safe Damage. The extent of the partial failure is to be such that it would be readily detectable during the specified inspection. It may involve complete failure of a principal element, failure of more than one element, or only a partial failure of an element, depending on the rate of crack propagation, the ease of detection, and the inspection interval. Damage in inaccessible areas should extend into inspectable areas.

Typical examples of the fatigue damage that should be considered are outlined below:

(i) Cracks emanating from the edge of structural openings or cutouts which can be readily detected by visual inspection of the area.

(ii) A circumferential or longitudinal skin crack in the basic fuselage structure of such a length that it can be readily detected by a visual inspection of the surface area.

(iii) Complete severance of interior frame elements or stiffeners in addition to a visually detectable crack in the adjacent skin.

(iv) Failure of one element in a multiple load path design.

(v) Failure of primary attachments, including control hinges and fittings.

(3) Determination of Probable Crack Locations. The probable crack locations are to be determined by tests, analysis, or both. In cases of unusually critical or complex components or when initial fatigue loading may affect the rate or mode of cracking, the probable crack locations should be determined by fatigue test. When determination is made by analysis, sound engineering judgement should be used and a variety of factors such as the following should be taken into account:

(i) Conducting an analysis to locate areas of maximum stress and low margin of safety.

(ii) Conducting strain surveys on undamaged structure to establish points of high stress concentration as well as the magnitude of such concentration.

(iii) Examining static test results to determine locations where excessive deformation occurred.

(iv) Determining from fatigue analysis where cracks may initiate.

(iv) Selecting locations in an element where the stresses in adjacent elements would be the maximum with that element failed.

(v) Selecting partial fracture locations in an element wherein high stress concentrations are present in the residual structure.

(vi) Assessing design detail areas which are prone to fatigue damage such as joints, holes, and other features as based on service and test experience of similarly designed components.

(4) Fail-Safe Demonstration. It is to be demonstrated by analysis, tests, or both, that the structure with the partial failures as defined in paragraphs f(2) and f(3) can withstand the maximum load and the repeated loads expected in service during the period prior to detection. The repeated loads should be as defined in the loading

spectrum of paragraph d(2) and the structure should be capable of supporting this loading after a partial failure for a sufficient time with respect to the inspection interval to assure that catastrophic failure is extremely remote. In test demonstrations, the damage may be initiated or simulated by cuts made with a fine saw, sharp blade, or guillotine in those cases where it is not necessary and not practical to produce fatigue cracks by tests. In those cases where damage is simulated at joints or fittings, bolts may be removed to simulate failure if this condition would be representative of an actual failure. In some instances, the fail-safe characteristics may be shown analytically. The analytical approach may be used when the structural configuration involved is essentially similar to one already verified by fail-safe tests, whether on a previously approved type design, or on other similar areas of the design currently being evaluated. The analytical approach may also be used when:

(i) It can be shown that the failure would be detected considerably before the critical crack length is reached;

(ii) The margins of safety resulting from the analysis are well in excess of the fail-safe residual static strength level; and,

(iii) The stress levels in the partially failed structure and the design are such as to assure adequate crack propagation time relative to the inspection interval.

(5) Inspection. Detection of fatigue cracks before they become dangerous is the ultimate control in ensuring the fail-safe characteristics of the structure. Therefore, the manufacturer should provide sufficient guidance information to assist operators in establishing the frequency and extent of the repeated inspections of the critical structure.

g. Further Considerations.

(1) Control of Fatigue Sensitive Parts. Control of the part in manufacture, operational service, and maintenance is vital to ensure the full benefits of the fatigue life substantiation process. Any part that has been selected for fatigue assessment should be considered using the following guidance. This is particularly important for safe life parts with no damage tolerance capability. The details of the manufacturing procedures and processes for fatigue sensitive parts, including material manufacture and source, forging procedures, machining operations and sequence, and inspection techniques and acceptance and rejection criteria should be established. Sensitivity should be established on the basis of identifying the processes, which if incorrectly completed could significantly affect the fatigue life. The tested components should be produced in accordance with the above manufacturing procedures. For life-limited and fatigue sensitive parts, the design and manufacturing standards should be frozen subject to further evaluation by the design authority. Parts produced in whole or in part under sub-contracting or partnership arrangements should be subject to the same procedures. Life-limited and fatigue sensitive parts should be marked with a serial number and records relating to the marking maintained, such that it is possible to establish the

relevant manufacturing modification and service history of the individual parts. Special instructions should be provided, as necessary, to ensure the part is handled in an appropriate manner, particularly during maintenance. Processes for determining the disposition of parts having manufacturing errors or material flaws should be established. In a similar manner, processes controlling changes to the design or manufacture of the component or to its operating environment or loading spectrum are required. For any such changes, their effects on the fatigue evaluation of the part should be established. This evaluation should involve further fatigue testing, unless it can be shown that testing is not necessary.

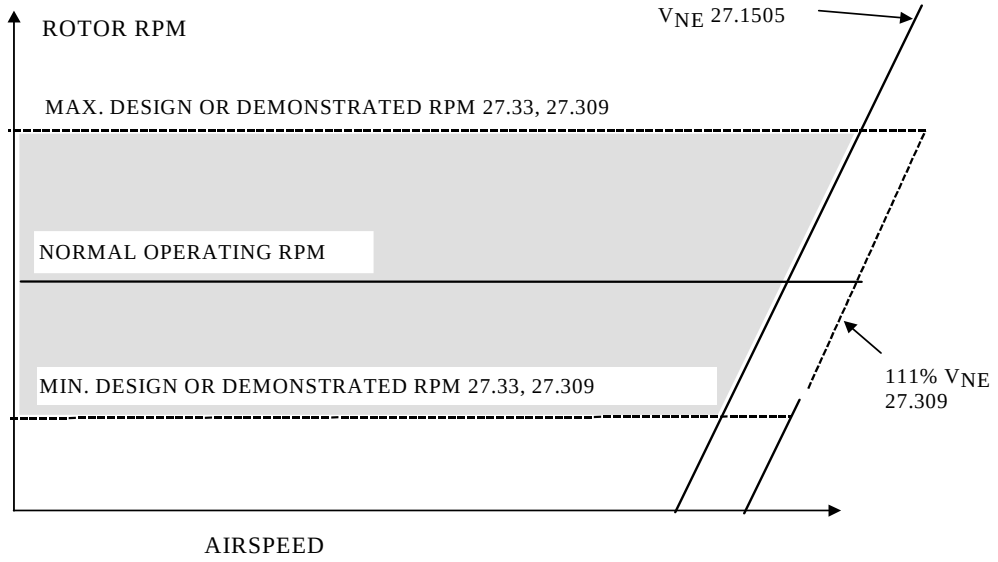

FIGURE AC 27.MG 11-2. Flight Regime to be Investigated Power-On Operation.

(Note: Dashed lines in these figures indicate test boundaries. Shaded areas indicate operating regimes.)

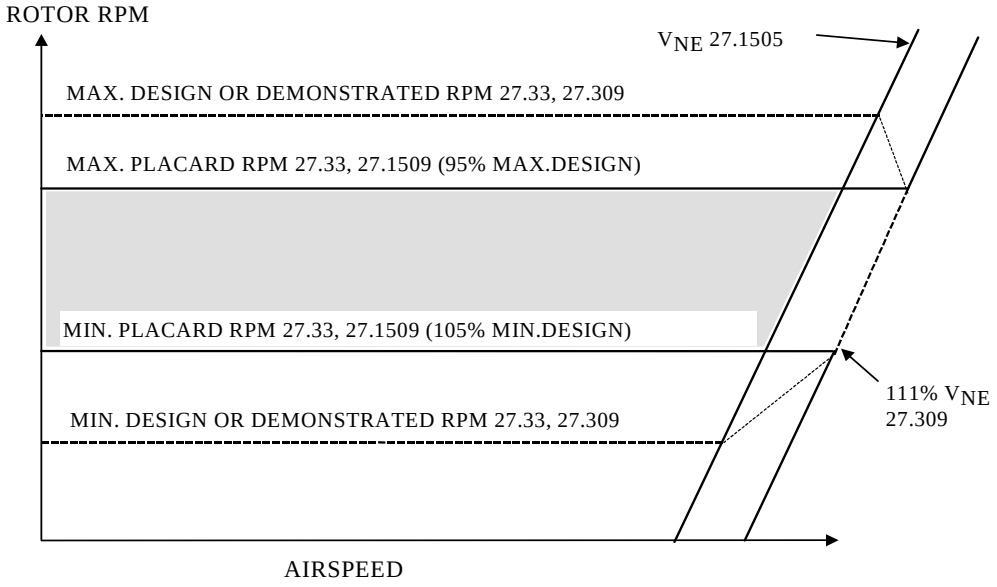

FIGURE AC 27.MG 11-3. Flight Regime to be Investigated for Power-Off Operation

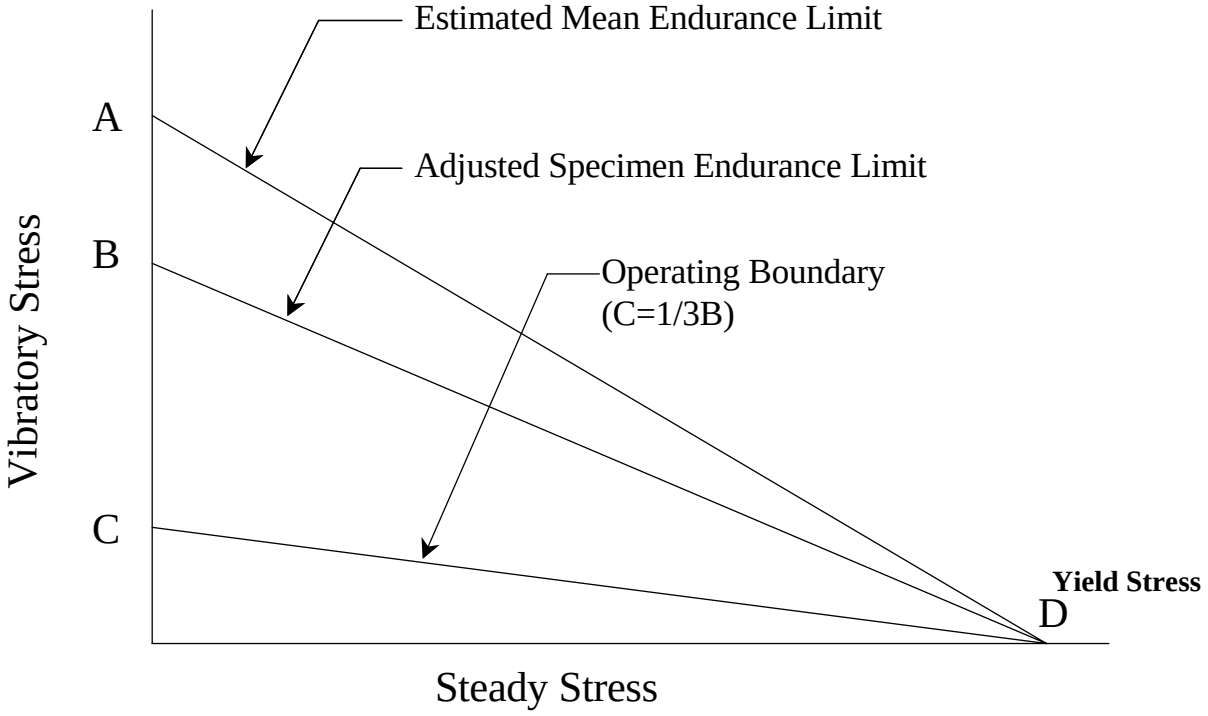

FIGURE AC 27.MG 11-4. Simplified analytical method for safe life evaluation

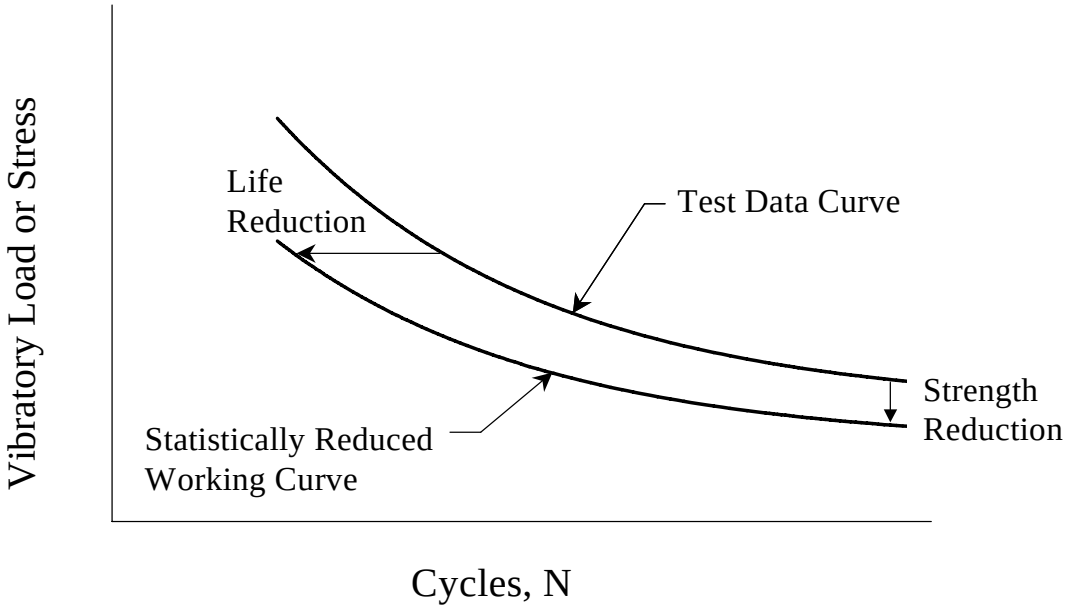

FIGURE AC 27.MG 11-5. Typical S/N curve for safe life evaluation.

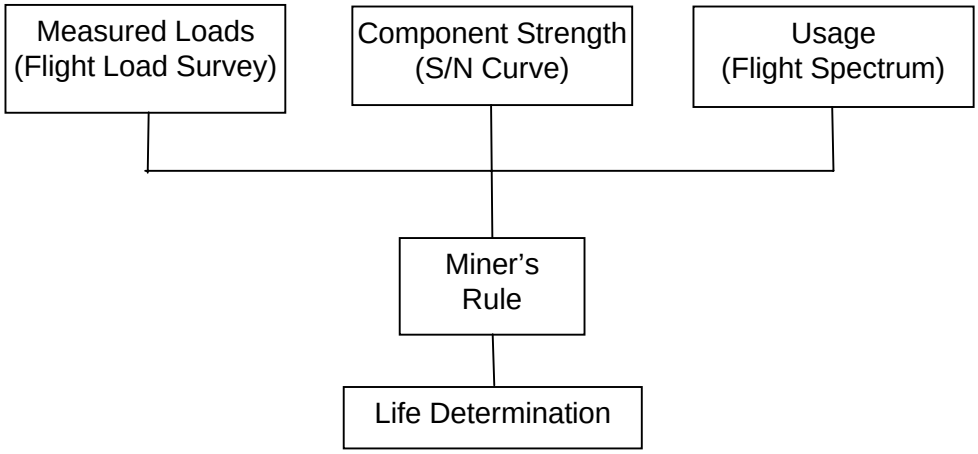

FIGURE AC 27.MG 11-6. Elements of Safe-Life Determination

FIGURE AC 27.MG 11-7

FLIGHT LOAD MEASUREMENT PROGRAM CONDITIONS TO BE INVESTIGATED

1. GROUND CONDITIONS.		
a. Normal start.		
b. Rapid increases of RPM on ground to maximum power-on RPM of main rotor.		
c. Taxiing with max allowable full cyclic control.		
d. Landing run (if applicable).		
e. Braking (if applicable).		
f. Normal shutdown.		
g. Special ground checks (if applicable).		
2. HOVERING IN AND OUT OF GROUND-EFFECT	(1) Steady with rotor at maximum side of RPM tolerance. (2) Steady with rotor at minimum side of RPM tolerance. (3) 90-degree right turn (4) 90-degree left turn (5) Control reversals (6) Sideward flight (7) Rearward flight	i) Longitudinal. ii) Lateral. iii) Rudder. i) Left. ii) Right.
3. MANEUVERING IN GROUND EFFECT	(1) Jump takeoff. (2) Normal takeoff (*) and accelerate to climb airspeed. (3) Normal Landing (*) (4) Full autorotational landing.	i) Multiengine. ii) One-engine-inoperative.

	FIGURE AC 27.MG 11-7 (continued)	
4. FORWARD FLIGHT-POWER ON. a. Level flight. (**)	(1) 40 percent V_H	i) Minimum side of main rotor RPM tolerance (RPM -) ii) Maximum side of main rotor RPM tolerance (RPM +)
	(2) 60 percent V_H	i) (RPM +) ii) (RPM -)
	(3) 80 percent V_H	i) (RPM +) ii) (RPM -)
	(4) V_H	i) (RPM +) ii) (RPM -)
	(5) V_{NE}	i) (RPM +) ii) (RPM -)
b. Maneuvers.	(1) Full power climbs. (**)	i) All engines operative. ii) One-engine-inoperative.
	(2) Cyclic pull-ups.	i) 60 percent V_H. ii) 90 percent V_H.
	(3) Normal acceleration from climb airspeed to 90 percent V_H.	
	(4) Turns, right and left over a range of bank angles and speeds up to the lesser of V_H or V_{NE} and including:	i) Right at 60 percent V_H and 90 percent V_H. ii) Left at 60 percent V_H and 90 percent V_H.
	(5) Control reversals at 90 percent V_H.	i) Longitudinal. ii) Lateral. iii) Rudder.
	(6) Deceleration from 90 percent V_H to descent airspeed.	
	(1) Partial power descent. (*)	
	(2) Normal approach	
	(3) Steep Approaches (to landing) or Flare	i) All engines. ii) One engine out.

	FIGURE AC 27.MG 11-7 (continued)	
5. POWER TRANSITIONS. a. All engines operating to one engine out.	(1) In full power climb. (2) At 90 percent V_H.	
b. One engine out to all engines operating in powered descent.		
c. All engines operating to autorotation.	(1) At 60 percent V_H. (2) At maximum forward transition speed.	
d. Stabilized autorotation to all engines operating at normal autorotation airspeed.		
6. AUTOROTATION. a. Stabilized.	(1) At 70 percent V_{NE}. (2) At V_{NE}.	
b. Turns at 70 percent and 100 percent V_{NE}.	(1) Right. (2) Left.	
c. Cyclic pull-up.		
d. Control reversals.	(1) Longitudinal. (2) Lateral. (3) Rudder.	

(**) side slip conditions should be considered
(*) max slope angle and aircraft headings should be considered

FIGURE AC 27.MG 11-8

LIFTING HELICOPTER LOAD MEASUREMENT in addition to normal conditions		
CONDITION	%RATED LOAD	% V_{NE}
ROTOR START		
VERTICAL LIFT	100	
	87	
HOVER including spot turns sideward and rearward flight and control reversal.	100	
	87	
CRUISE with load	100	100
	87	100
	100	90
	87	90
CRUISE no load		100
		90
CLIMB max. rate		
DECELERATIONS max. rate		
GROUND IDLE SHUTDOWN		

FIGURE AC 27.MG 11-9. EXAMPLE OF TWIN TURBINE USAGE SPECTRUM

Notes:

1. Altitude, temperature, center of gravity, and weight variations may be appropriate where justified by service data; otherwise the worst case must be assumed throughout.
2. This spectrum is an example only; all probable types of operation must be accounted for unless prohibited--see Section 3.

CONDITION	% of time	Nb per hour				
ON GROUND inc START UP	**3.5**	**5**				
TAXIING	3.5					
APPROACH	5	2				
NORMAL	3.5					
UNDER HEAVY SLOPE	0.75					
FLARE	0.375	1				
QUICK-STOP	0.375	1				
						Dur. 14 (s)
SPOT-TURN	**1**	**5**				
30°/S/NORM (STOP)/RIGHT	0.32	1.6	Yaw speed rep.		Stop rep.	
30°/S/NORM (STOP)/LEFT	0.32	1.6	80.00%	30°	80.00%	normal
30°/S/MAX (STOP)/RIGHT	0.08	0.4	15.00%	45°	20.00%	max
30°/S/MAX (STOP)/LEFT	0.08	0.4	5.00%	max		
45°/S/NORM (STOP)/RIGHT	0.06	0.3				
45°/S/NORM (STOP)/LEFT	0.06	0.3				
45°/S/MAX (STOP)/RIGHT	0.015	0.075				
45°/S/MAX (STOP)/LEFT	0.015	0.075				
MAX/NORM (STOP)/RIGHT	0.02	0.1				
MAX/NORM(STOP)/LEFT	0.02	0.1				
MAX/MAX (STOP)/RIGHT	0.005	0.025				
MAX/MAX (STOP)/LEFT	0.005	0.025				
						Dur. 7.2 (s)
LANDING	**1.5**	**5**				
NORMAL	1.482	5.94	1/20 hours	slope 8°		
ON SLOPE/8DEG/RIGHT	0.0043	0.0145	1/100 hours	slope 10°		
ON SLOPE/8DEG/LEFT	0.0043	0.0145				
8DEG/NOSE-UP	0.0038	0.0125				
8DEG/NOVE-DOWN	0.0043	0.0145				
ON SLOPE/10DEG/NOSE-UP	0.0006	0.002				
COMB.SLOPE	0.0006	0.002				
						Dur. 11 (s)
AUTOROTATION	**1**	**1**	Speed rep.		RPM rep.	
VERTICAL	0.05	0.05	5.00%	70Kts	10.00%	Mini
40 KTS	0.2	0.2	20.00%	70Kts	50.00%	Nomi
70 KTS	0.3	0.3	30.00%	70Kts	36.00%	Maxi
120 KTS	0.25	0.25	25.00%	120Kts	4.00%	Maxi.trans
135 KTS	0.15	0.15	15.00%	135Kts		
V_{NE}	0.05	0.05	5.00%	V_{NE}		
						Dur. 36 (s)
TAKE OFF	**1.5**	**5**				Dur. 11 (s)
NORMAL	0.8892	2.964	60.00%	Normal		
QUICK	0.5928	1.976	40.00%	Quick		
ON SLOPE/8DEG/RIGHT	0.0043	0.0145	1/20 hours	slope 8°		
ON SLOPE/8DEG/LEFT	0.0043	0.0145	1/100 hours	slope 10°		
ON SLOPE/8DEG/NOSE-UP	0.0038	0.0125				
ON SLOPE/8DEG/NOVE-DOWN	0.0043	0.0145				
ON SLOPE/10DEG/NOSE-UP	0.0006	0.002				
COMB.SLOPE	0.0006	0.002				
DESCENT	**1.5**	**2**				
PARTIAL POWER/STD/STD	0.96	1.28	Speed rep.		Side slip PP values rep.	
PARTIAL POWER/5 DEG/RIGHT	0.072	0.096	80.00%	Partial power	60.00%	5°
PARTIAL POWER/5 DEG/LEFT	0.072	0.096	20.00%	V_{NE}	30.00%	10°
PARTIAL POWER/10 DEG/RIGHT	0.036	0.048			8.00%	15°
PARTIAL POWER/10 DEG/LEFT	0.036	0.048	Side slip rep.		2.00%	20°
PARTIAL POWER/15 DEG/RIGHT	0.0096	0.0128	80.00%	Without		
PARTIAL POWER/15 DEG/LEFT	0.0096	0.0128	20.00%	with	Side slip V_{NE} values rep.	
PARTIAL POWER/20 DEG/RIGHT	0.0024	0.0032			90.00%	5°
PARTIAL POWER/20 DEG/LEFT	0.0024	0.0032			10.00%	10°
V_{NE} AT MCP/STD/STD	0.24	0.32				
V_{NE} AT MCP/5 DEG/RIGHT	0.027	0.036				
V_{NE} AT MCP/5 DEG/LEFT	0.027	0.036				
V_{NE} AT MCP/10 DEG/RIGHT	0.003	0.004				
V_{NE} AT MCP/10 DEG/LEFT	0.003	0.004				

FIGURE AC 27.MG 11-9. EXAMPLE OF TWIN TURBINE USAGE SPECTRUM (continued)

CONDITION	% of time	Nb per hour				
CLIMB	**3**	**4**				
MCP 75 KTS/STD/STD	1.8	2.4	Climb rep.		Side slip values rep.	
MCP 75 KTS/05-10 DEG/RIGHT	0.18	0.24	75.00%	75 Kts	80.00%	05 10
MCP 75 KTS/05-10 DEG/LEFT	0.18	0.24	25.00%	Vertical	18.00%	15 20
MCP 75 KTS/15-20 DEG/RIGHT	0.0405	0.054			2.00%	25 30
MCP 75 KTS/15-20 DEG/LEFT	0.0405	0.054				
MCP 75 KTS/25-30 DEG/RIGHT	0.0045	0.006	Side slip rep.			
MCP 75 KTS/25-30 DEG/LEFT	0.0045	0.006	80.00%	Without		
TOP/VERTICAL	0.75	1	20.00%	with		
						Dur. 27 (s)
LEVEL FLIGHT	**56.5**					
80% MCP/STD/STD	12.4		Speed rep.		Side slip rep.	
80% MCP/5 DEG/RIGHT	1.08		28.3%	80% MCP	80.00%	Without
80% MCP/5 DEG/LEFT	1.08		36.3%	90% MCP	20.00%	with
80% MCP/10 DEG/RIGHT	0.54		35.4%	MCP		
80% MCP/10 DEG/LEFT	0.54					
80% MCP/15 DEG/RIGHT	0.144					
80% MCP/15 DEG/LEFT	0.144		Side slip typ rep.			
80% MCP/20 DEG/RIGHT	0.036		60.00%	5°		
80% MCP/20 DEG/LEFT	0.036		30.00%	10°		
90% MCP/STD/STD	16.3		8.00%	15°		
90% MCP/5 DEG/RIGHT	1.26		2.00%	20°		
90% MCP/5 DEG/LEFT	1.26					
90% MCP/10 DEG/RIGHT	0.63					
90% MCP/10 DEG/LEFT	0.63					
90% MCP/15 DEG/RIGHT	0.21					
90% MCP/15 DEG/LEFT	0.21					
MCP/STD/STD	17					
MCP/5 DEG/RIGHT	0.9					
MCP/5 DEG/LEFT	0.9					
MCP/10 DEG/RIGHT	0.45					
MCP/10 DEG/LEFT	0.45					
MCP/15 DEG/RIGHT	0.15					
MCP/15 DEG/LEFT	0.15					
PULL-UP	**0.22**	**1.1**				
PULL-UP/V_{NE}	0.01	0.05				
PULL-UP/LEVEL FLIGHT 80%MCP	0.1	0.5				
PULL-UP/LEVEL FLIGHT 90%MCP	0.1	0.5				
PULL-UP/AUTOROTATION	0.01	0.05				
						Dur. 7.2 (s)
HOVERING	**10**	**10**				
HOVERING/IGE	9	9				
HOVERING/OGE	1	1				
						Dur. 36 (s)
TRANSITION	**4.52**	**19.6**				
TRANSITION/CLIMB TO V_{MAX}	0.292	5				
TRANSITION/90%MCP TO V.DESC(ISO-V)	0.292	5				
TRANSITION/LEVEL.F TO AUTO.(65 KTS)	0.292	0.5				
TRANSITION/FORW.F AFTER REAR.F	0.06	0.1				
TRANSITION/HOVERING TO FWD FLIGHT	3	5				Dur. 22 (s)
TRANSITION/PITCH INCREASE(65 KTS)	0.292	2				
TRANSITION/PITCH DECREASE(65 KTS)	0.292	2				
						Dur. 3.6 (s)

FIGURE AC 27.MG 11-9. EXAMPLE OF TWIN TURBINE USAGE SPECTRUM (continued)

CONDITION	% of time	Nb per hour				
TURNS	**8**	**30**				
TURNS/60% MCP/NZ 1.2G/RIGHT	0.2667	1	Speed rep.		Nz rep	
TURNS/60% MCP/NZ 1.2G/LEFT	0.2667	1	10.00%	60% MCP	10	>1.2g
TURNS/60% MCP/NZ 1.4G/RIGHT	0.0989	0.3709	30.00%	80% MCP	20	1.2g
TURNS/60% MCP/NZ 1.4G/LEFT	0.0989	0.3709	35.00%	90% MCP		
TURNS/60% MCP/NZ 1.6G/RIGHT	0.0330	0.1237	25.00%	MCP		
TURNS/60% MCP/NZ 1.6G/LEFT	0.0330	0.1237				
TURNS/60% MCP/NZ 1.8G/RIGHT	0.0013	0.005	Nb per hour			
TURNS/60% MCP/NZ 1.8G/LEFT	0.0013	0.005	20	1.2g	1.4/1.6g rep.	
TURNS/60% MCP/V.LIM +0.1G/RIGHT	0.00013	0.0005	7.4175	1.4g	75.00%	1.4g
TURNS/60% MCP/V.LIM +0.1G/LEFT	0.00013	0.0005	2.4725	1.6g	25.00%	1.6g
TURNS/80% MCP/NZ 1.2G/RIGHT	0.8	3	0.1	1.8g		
TURNS/80% MCP/NZ 1.2G/LEFT	0.8	3	0.01	V.lim+0.1G		
TURNS/80% MCP/NZ 1.4G/RIGHT	0.2967	1.1126				
TURNS/80% MCP/NZ 1.4G/LEFT	0.2967	1.1126				
TURNS/80% MCP/NZ 1.6G/RIGHT	0.0989	0.3709				
TURNS/80% MCP/NZ 1.6G/LEFT	0.0989	0.3709				
TURNS/80% MCP/NZ 1.8G/RIGHT	0.004	0.015				
TURNS/80% MCP/NZ 1.8G/LEFT	0.004	0.015				
TURNS/80% MCP/V.LIM +0.1G/RIGHT	0.0004	0.0015				
TURNS/80% MCP/V.LIM +0.1G/LEFT	0.0004	0.0015				
TURNS/90% MCP/NZ 1.2G/RIGHT	0.9333	3.5				
TURNS/90% MCP/NZ 1.2G/LEFT	0.9333	3.5				
TURNS/90% MCP/NZ 1.4G/RIGHT	0.3461	1.298				
TURNS/90% MCP/NZ 1.4G/LEFT	0.3461	1.298				
TURNS/90% MCP/NZ 1.6G/RIGHT	0.1154	0.4327				
TURNS/90% MCP/NZ 1.6G/LEFT	0.1154	0.4327				
TURNS/90% MCP/NZ 1.8G/RIGHT	0.0046	0.0175				
TURNS/90% MCP/NZ 1.8G/LEFT	0.0046	0.0175				
TURNS/90% MCP/V.LIM +0.1G/RIGHT	0.0004	0.00175				
TURNS/90% MCP/V.LIM +0.1G/LEFT	0.0004	0.00175				
TURNS/MCP/NZ 1.2G/RIGHT	0.6667	2.5				
TURNS/MCP/NZ 1.2G/LEFT	0.6667	2.5				
TURNS/MCP/NZ 1.4G/RIGHT	0.2473	0.9272				
TURNS/MCP/NZ 1.4G/LEFT	0.2473	0.9272				
TURNS/MCP/NZ 1.6G/RIGHT	0.0824	0.3091				
TURNS/MCP/NZ 1.6G/LEFT	0.0824	0.3091				
TURNS/MCP/NZ 1.8G/RIGHT	0.0033	0.0125				
TURNS/MCP/NZ 1.8G/LEFT	0.0033	0.0125				
TURNS/MCP/V.LIM +0.1G/RIGHT	0.0003	0.0013				
TURNS/MCP/V.LIM +0.1G/LEFT	0.0003	0.0013				
						Dur. 9.6 (s)
SPECIAL TURNS	**0.76**	**2.025**				
TURNS/V_{NE}(30DEG)/*/RIGHT	0.0038	0.01				
TURNS/V_{NE}(30DEG)/*/LEFT	0.0038	0.01				
TURNS/V_{NE} IN AUTO.(30DEG)/*/RIGHT	0.00094	0.0025				
TURNS/V_{NE} IN AUTO.(30DEG)/*/LEFT	0.00094	0.0025				
TRANSITION/TURN IN TRANSITION/*/RIGHT	0.3753	1				
TRANSITION/TURN IN TRANSITION/*/LEFT	0.3753	1				
						Dur. 14 (s)
LATERAL FLIGHT	**2**	**8**				Dur. 9 (s)
5 KTS/*/RIGHT	0.095	0.38	Lat.Back rep.		Speed rep.	
5 KTS/*/LEFT	0.095	0.38	95.00%	Lateral	10.00%	5 kts
10 KTS/*/RIGHT	0.095	0.38	5.00%	Backward	10.00%	10 kts
10 KTS/*/LEFT	0.095	0.38			10.00%	15 kts
15 KTS/*/RIGHT	0.095	0.38			40.00%	17 kts
15 KTS/*/LEFT	0.095	0.38			10.00%	19 kts
17 KTS/*/RIGHT	0.38	1.52			5.00%	21 kts
17 KTS/*/LEFT	0.38	1.52			5.00%	25 kts
19 KTS/*/RIGHT	0.095	0.38			5.00%	35 kts
19 KTS/*/LEFT	0.095	0.38			5.00%	max
21 KTS/*/RIGHT	0.0475	0.19				
21 KTS/*/LEFT	0.0475	0.19				
25 KTS/*/RIGHT	0.0475	0.19				
25 KTS/*/LEFT	0.0475	0.19				
35 KTS/*/RIGHT	0.0475	0.19				
35 KTS/*/LEFT	0.0475	0.19				
V_{MAX}/*/RIGHT	0.0475	0.19				

CONDITION	% of time	Nb per hour						
V_{MAX}/*/LEFT	0.0475	0.19						
V_{MAX}/*/REARWARD	0.1	0.4						
	100							

INTENTIONALLY
LEFT
BLANK

CHAPTER 3
AIRWORTHINESS STANDARDS
NORMAL CATEGORY ROTORCRAFT

MISCELLANEOUS GUIDANCE (MG)

AC 27 MG 12. § 27.865 (Amendment 27-36) EXTERNAL LOADS.

This AC MG paragraph material is now contained in AC 27.865B, in Subpart D.

CHAPTER 3
AIRWORTHINESS STANDARDS
NORMAL CATEGORY ROTORCRAFT

MISCELLANEOUS GUIDANCE (MG)

AC 27 MG 13. SYSTEMS CERTIFICATION CONSIDERATIONS.

a. **Supporting Systems.**

(1) Purpose. The purpose of this AC paragraph is to provide guidance on how to show compliance to Part 27 regulations as they apply to supporting systems for other systems that provide required functions. The applicability of this material to “systems” is defined by AC 27.1309.a(1). The systems that require support from supporting systems are defined as dependent systems in the following guidance. Application of recent technology is one of the predominant causes of more dependent/supporting systems relationships. More systems are employing technology that is dependent on supporting systems such as electrical, hydraulic, and/or other power sources or signal inputs. Certification of systems that are dependent on supporting systems to provide required functionality must consider the issues associated with this interdependent relationship.

(2) Definitions.

(i) Integrity. The term “integrity” for the purpose of this AC paragraph includes the hardware quality requirements, including reliability (availability); as well as the software level requirements, as defined in RTCA/DO-178B.

(ii) Criticality. The term “criticality” refers to the five levels of criticality addressed in this document in paragraph AC 27.1309f(2)(i).

(iii) Supporting System(s). The term “supporting system(s)” as used in this paragraph means any system(s) that provides an input to another “dependent” system, such that these dependent system(s) cannot function correctly without that input being present/correct.

(iv) Dependent System(s). The term “dependent system(s)” as used in this paragraph means any system/s that receives an input from another system or sensor.

(3) Related Documents.

(i) Federal Aviation Regulations (FARs) Paragraphs 27.1301, 27.1309, 27.1351, and 27.1435.

(ii) Standards - Latest revision of RTCA/DO178 and RTCA/DO 160; Parts of SAE documents ARP4754 and ARP4761.

(4) History: Applications of recent technology for systems have, in many cases, resulted in systems that are dependent on one or more supporting system(s) for inputs such as power or signal sources of any type. This relationship creates concerns for recognition that the criticality of the supporting system may be higher because of its role of supporting a dependent system of high criticality. The example of Liquid Crystal Displays (LCD) for engine instruments, in particular, has caused concern about the integrity of the supporting electrical power system. Past designs for engine instruments did not require electrical power for operation, but present designs with LCDs do require electrical power. Additionally, engine instruments of those older helicopter designs were driven from a mixture of sources such as independent wet line, pneumatic, and electrical drive (Tach Generator) inputs, and thus had independent failure modes from the sensor/power input aspect(s). This means that the integrity of the electrical power supplied to the dependent system must be commensurate with the level of integrity as required for the highest criticality engine instrument application(s). This also stimulates the concern that the electrical power system can become a common point for failure of all engine instruments simultaneously, as well as anything else powered by the electrical system. For this example, these considerations represent an increase of integrity requirements for the electrical power system over previous designs of electrical systems for VFR helicopters. In the past, these electrical systems did not support required functions of higher criticality and were allowed to be simple in design with low design integrity and susceptible to single point faults. Application of recent technologies for systems resulting in dependent systems that require supporting systems must address the concerns for higher integrity and single point faults.

(5) Discussion: Integrity of supporting systems must be sufficient to support the required integrity of their associated dependent systems. The relationship of supporting systems to dependent systems is similar to an analogy of them being links in a chain, where the weakest link must be able to support the required integrity level that is consistent with the associated criticality category assessment. This principle is not new, but there may not be recognition that systems previously accepted at low integrity levels may not be acceptable because of their new role as supporting system(s). New emphasis must be applied to determine acceptability of previous designs that have become supporting systems through application of new technology or changes of system architecture. This is particularly true for derivative designs, or changes to existing design by either supplemental type certificate (STC) or field approval, where new technology system applications, or system architecture changes have

been applied, that created a dependent/supporting system relationship. The main concerns are for systems such as electronic displays that are installed and supported by non-upgraded systems, such as single source and/or low reliability power generation and distribution systems. However the concerns related to supporting systems are not limited to displays for dependent systems, since control systems could also be affected. Integrity for fault considerations must be addressed for supporting systems in relation to dependent systems when the dependent system's provided functions are assessed at criticality levels of Major, Hazardous/Severe-Major, or Catastrophic. These integrity and fault considerations must address not only a particular dependent system, but also the accumulative effect on other systems that the same supporting system's malfunction may affect. This may, in turn, affect the aircraft level functional hazard assessment (FHA) as the supporting system could act as a common point for simultaneous failures of more than one system. Additionally, the design of the supporting systems should preclude single point failures/faults for systems that support dependent systems functions assessed to have a criticality of Catastrophic.

(6) Certification Approach. There are three basic parts to the supporting systems concerns addressed herein and they are the inclusion of supporting systems in the integrity determination process, the design considerations for supporting systems relating to more than one system, and single point faults for the supporting systems themselves.

(i) A two-step procedure should be used to determine the adequate integrity level for supporting systems. The first step is to determine the level of criticality associated with loss/malfunction of all or any combination of the dependent system's functions and all combinations of other dependent system's functions that require support from the same supporting system. This can be achieved through the use of an FHA and associated FTA's. The criticality category level determined from this assessment must be a product of failure/malfunction possibilities for all of the involved dependent/supporting systems combinations and the worst case operational consideration for the function(s) provided by the dependent systems. The second step is to determine whether the supporting system's design integrity is sufficient to address the determined criticality category. The design integrity should address failures/malfunctions results of the dependent system(s), any combination of failures/malfunctions due to effects on more than one dependent system, and single point failures of the supporting system itself.

(ii) Analyses may be used to meet the criteria outlined in the second step above, for systems that support one or more dependent system functions whose loss or malfunction is assessed to be Hazardous/Severe-Major orCatastrophic. Analyses, such as a fault tree analysis, in combination with a common cause analysis to validate assumptions regarding the independence of

faults, should be performed to show compliance. Testing may be required to validate the analysis, if the system is complex or dynamic in nature.

NOTE: Showing high reliability for a single thread system is not sufficient to meet the requirements for a Catastrophic failure condition category, thus reliability cannot be used to substitute for the preclusion of single point failures/faults.

(7) Summary: Supporting systems should be considered an integral part of the dependent system(s) that provides the required functions, for the purpose of addressing design integrity requirements.

b. Complex System Integration

(1) Explanation. Complex integrated systems addressed by this paragraph are those systems that provide more than one function from a single electronic device or from more than one inter-related electronic devices/components. The inter-relationship is based on common aspect(s) of providing the functions. The definition of complexity as it applies to integrated systems, is a design condition that exhibits the characteristic of possible combinations of simultaneous failures/faults, as opposed to simple systems where there exists only failures/faults that can be considered individually. Integration that results in providing several functions from one design source inherently increases complexity, thus the two describing terms of “complex” and “integrated” are not independent from one another. Computers have become more powerful with recent increases in technology. Also, related sensors and servomechanisms have greatly improved. This has created an atmosphere from which complex integrated systems have spawned. Integrated systems can have the effects of reduced weight, economic advantages, and system enhancements. However, with these advantages there are some concerns that must be addressed, as this concept inherently creates problems with showing compliance to system independence requirements.

(2) Procedure.

(i) Integrated Systems typically compromise the concept of independence for failures/malfunctions and system/function separation. Using this as a given, the approach for showing compliance for systems that have a requirement for independence is to provide elevated system integrity to make up for the loss of independence. The requirements for independence are both direct and inferred. The direct requirements are defined by requirements for system separation and for specific systems. The inferred requirements for independence are those that inherently have independence by their method of implementation until integration of dissimilar functions by recent technology. They are inferred since past methods of implementation provided independence and therefore no direct requirement was defined.

(ii) The elevated integrity typically consists of high software levels and high system reliability that addresses the failure condition categories determined by a Functional Hazard Assessment (FHA). This approach basically states that the independence for failures and function separation is absent, but the probability is small for loss or malfunction, and the software level will match the threat level identified by the FHA. Provided the integrity is a reality, this approach works pretty well for the loss and malfunction aspects. However, system separation requirements may not be satisfied as easily, as they are mostly concerned with common mode failures from external sources. Some common mode concerns are temperature, fire, water, EMI, and physical mechanical threats.

(iii) The combinations of systems/functions that comprise a single integrated system are important. If any of the systems or combinations of systems that make up the composite integrated system are assessed to have a high criticality level, then the design integrity of the composite integrated system should match the highest of those assessments. In infrequent cases, partitioning and unique hardware/software architecture may be exceptions to this determination. In cases where the FHA has determined low criticality for all combinations of systems/functions, many of the concerns associated with complex integration may be minimized.

(A) Concerns to be addressed for complex integrated systems that address failures and malfunctions:

(1) An FHA must be performed that considers each function individually and all combinations of functions for loss and malfunction. Additionally, all supporting systems, all combinations of supporting systems, and all combinations of supporting systems and dependent systems must be considered for loss and malfunction.

(2) After the criticality has been determined for all functions and combinations of functions, the design integrity can be defined in terms of reliability and software level. The reliability must match or exceed the requirements derived from the FHA and associated FTA results. This includes any supporting system as well as the primary system.

(3) The software integrity level must match or exceed the requirements derived from the FHA and associated FTA results. This is true generally, for all of the software, if a single computer is utilized and no software or architecture scheme is implemented to provide partitioning/protection.

(4) If redundancy is required to meet the reliability requirements, adequate redundancy failure management must be provided. Redundancy failure/malfunction management is required to eliminate latent failures or undetected malfunctions. Redundancy management must address latent

failures. Without the detection and management of latent and unannounced failures and malfunctions, duplication of subsystem components may not be creditable redundancy. If the first failure can result in unknown loss of one of the system's functionally duplicated parts, then the second failure in combination with the first failure must be treated as a single failure and no design credit can be given for redundancy.

(5) Redundancy design must consider similarity of software between redundant system components.

(6) Electronic Devices (EDs) such as the Central Processing Unit (CPU), Programmable Logic Device (PLD), Application Specific Integrated Circuits (ASIC), or other types of data storage or computing devices must be considered to have common mode failure potential, especially for control systems. This concern may be addressed in a variety of ways. One way would be to use dissimilar EDs between redundant implementations. Some other approaches may involve architectures with monitors that are dissimilar to the systems supplying the redundant functionality. Other hardware potential common mode failures must also be considered, such as power supplies, signal sources, and common Input/Output (I/Os) chips.

(B) The intent of system separation requirements is to minimize the possibility of total system failure/malfunction as a result of internal system failures or external influences. In some cases, system separation addresses systems that provide similar information by dissimilar means. An example of this type of system separation is the requirement for independence between the fuel quantity display system and the fuel low indication. This is a case where increased integrity can be accepted in lieu of total independence for small parts of an integrated system, depending on the extent of loss of independence and the associated failure condition category. Concerns to be addressed for system separation requirements are as follows:

(1) Internal concerns include common mode failures/malfunction that could result in unacceptable loss of satisfactory system functionality. Some of the sources of these failures/malfunctions include common electrical power supplies, common sensor sources, filtering referenced to common ground planes, common processing, and common threats from Electro–Magnetic Interference (EMI) sources.

(2) EMI from internal sources (Electro–Magnetic Compatibility (EMC)) and external sources (High Intensity Radiated Fields (HIRF)) must be addressed from systems separation aspects. Unless complete system immunity to EMI can be shown for designs of systems that provide functions to address catastrophic failures, the design should preclude influence from EMI events. This is of particular concern when redundancy is used to meet the criticality requirements. Designs should address the possibility of EMI affecting the

required function because of close physical proximity between all or parts of the redundant sections of the system. Areas of design that have the most concerns are those that include redundant system sections in the same enclosure and the redundant sections have a common cavity for penetration of wiring connectors. Another significant area of concern is for redundant system sections that employ wiring cables with little physical separation between cables for the respective redundant sections. In these cases, different lengths of cables between these redundant sections would reduce the possibility that radiated EMI would affect the system sections simultaneously at the same frequency.

(3) Other separation concerns are associated with external physical installation aspects. These physical aspects include protection from fire, water, excessive thermal variations, excessive vibration damage, and any mechanical failure of another system/component that could possibly impair the integrated system's functionality and result in an unacceptable decrease in safety.

INTENTIONALLY
LEFT
BLANK

CHAPTER 3
AIRWORTHINESS STANDARDS
NORMAL CATEGORY ROTORCRAFT

MISCELLANEOUS GUIDANCE (MG)

AC 27 MG 14 CERTIFICATION PROCEDURE FOR INSTALLATION OF VAPOR CYCLE AIR CONDITIONING SYSTEMS.

a. FAA/AUTHORITY Approval Philosophy. The vapor cycle (Freon) air conditioning system is generally considered "nonessential"; that is, its function is not necessary for safe flight. Therefore, the FAA/AUTHORITY looks at it from the standpoint of its potential of posing a hazard to the aircraft in the course of its normal function/malfunction or in case of a failure. 14 CFR Part 27.1309 thus becomes the dominant regulation concerning the system. However, if an air conditioning system is required for electrically powered equipment cooling, then a criticality assessment may show that the criticality level may be higher than nonessential.

b. Type of Refrigerant/Regulations/Environmental Impact.

(1) The refrigerant commonly used in automobiles and aircraft is known as Freon R-12 (home air conditioners use R-22). This Freon is one of the CHLOROFLUROCARBONS (CCl F) or CFCs. This compound is blamed for eroding the ozone layer in the Stratosphere (the chlorine in CFCs attacks and destroys the ozone molecules). The U.S. Clean Air Act restricts the production of CFCs. In 1992, production was restricted to 50%. The United States and most other industrial countries have agreed to phase out CFC production by 1995. CFC is prohibited beginning in the year 2000. Beginning in June 1992, CFCs required recovery.

(2) The new refrigerant HYDROFLUROCARBONS (CH FCF) HFC-134a or R-134a does not deplete ozone. Automobile industries as well as some small aircraft manufacturers are designing air conditioning systems with this non-ozone-depleting refrigerant. This HFC-134a is currently available and manufactured by the Dupont Company.

c. Suggested Compliance Checklist: R=Report, D=Drawing, T=Test.

REGULATION	SUBJECT	METHOD
27.301	Loads	R
27.303	Factor of safety	R
27.305	Strength & Deformation	R
27.307	Proof of structure	R
27.561	Emergency Landing conditions	R
27.603	Materials and Workmanship	D

Suggested Compliance Checklist: R=Report, D=Drawing, T=Test (continued)

REGULATION	SUBJECT	METHOD
27.605	Fabrication methods	D
27.607	Fasteners	D
27.609	Protection of Structure	R
27.613	Material Strength	R
27.685a,c	Control system details	D
27.831	Ventilation	R
27.853	Compartment interiors (a, b, c)	T
27.855	Cargo compartments (a, b)	D
27.863	Flammable fluid protection	D
27.1301	Function and Installation	T
27.1307	Miscellaneous Equipment, 27(c, e)	D
27.1309	Equipment systems and Installation	R
27.1435	Hydraulic system	T
27.1461	Equipment containing High energy rotors	D, R
27.1541	Markings and placards	D

d. Electrical System Considerations

(1) An electrical wiring diagram showing interconnections of all electrical components should be provided. The wiring diagram should show adequate circuit protection (circuit breakers). It should also indicate the use of wiring of adequate size and length to take maximum currents to which the system would be exposed. Power to air conditioning electrical system should be connected to an electrical power source that provides adequate power and does not interfere with essential electrical loads and provides solid electrical ground to airframe.

(2) An electrical load analysis should be provided to demonstrate the availability of adequate current to the air conditioning system from the helicopter electrical power source during all phases of flight and system operation. The system should also be powered from the helicopter electrical power source that provides adequate power and does not interfere with essential electrical loads.

(3) The air conditioning system should be capable of a successful functional test and electromagnetic compatibility test. It needs to be shown that air conditioning equipment will not be a source of interference with the essential equipment. Reference §§ 27.1351(a)(b), 27.1357, 27.1365, and 27.1367.

e. Structural Considerations

(1) Overall aircraft structure should be substantiated for the increased weight of the air conditioner modification. Each air conditioner component, its backup structure,

and its attachment to the aircraft structure should be substantiated to the strength requirements of Subpart C (14 CFR Part 27) and the design requirements of Subpart D (14 CFR 27). Load factors should be chosen considering the most critical of limit maneuvering load factor (§ 27.337), gust load factor (§ 27.341), or if applicable emergency landing conditions (§ 27.561). Load paths must be substantiated for the distribution of static and/or dynamic load conditions. Fatigue substantiation may be required depending on the installation (§ 27.571).

(2) The modifications done on the structure, due to air conditioner equipment installation, should not create any adverse qualities to the overall structural integrity of the aircraft. Any access holes cut in the aircraft structure for routing refrigerant/electrical line skin/stringer cutouts for intake or exhaust holes, etc., should be substantiated for overall structural integrity.

(3) All attachment hardware used for the air conditioner modification should be substantiated to meet the increased structural requirements.

f. System and Equipment Considerations

(1) The vapor cycle (Freon) system is properly considered to be a gaseous system. Granted, during some portion of the cycle, the Freon is in a liquid or liquid/vapor state; however, it is a gas under standard atmospheric conditions. Therefore, the proper system test would be a pressure test for a gaseous (pneumatic) system.

(2) 14 CFR Part 27 does not call out specific testing criteria but instead relies on § 27.1309 to address potential hazards due to pressurized gas systems. A proof pressure test of 1.5 times the maximum normal operating pressure of the system is appropriate to satisfy the intent of § 27.1309.

(3) The Freon pressures vary throughout the system during operation, but the maximum normal operating pressure of the components upstream from and including the high-pressure side of the expansion valve can be regarded as the value limited by the overpressure switch. The condenser and receiver-dryer are of special concern as they are of relatively large volume and a failure could cause damage to the aircraft structure or essential mechanical components.

(4) The highest pressure normally experienced by the low pressure portion of the Freon system (downstream of the expansion valve to the suction side of the compressor) occurs when the system is shutdown; hence that pressure can be used as the "maximum normal operating pressure" for the proof and burst tests in this portion of the system.

(5) The burst pressure tests can be done on a component basis or on the entire system. The proof pressure test is best done on the entire system to allow observation

of any movements of the flex hoses and other components under pressure, which may interfere with essential helicopter components.

(6) System capacity or efficiency does not affect the review of the system from the standpoint of safety; however, § 27/29.1301(a) requires "Each item of installed equipment be of a kind and design appropriate to its intended function". Hence the calculations of heat load of the cabin to be cooled in (British thermal unit) Btu's and the cooling capacity of the air conditioner system may be required. The vapor cycle is a closed system (recirculating of existing air) with no fresh air make up capability.

g. Powerplant Considerations (for mechanically-driven air conditioning compressors):

(1) The drive systems and the drive system component supporting structure should be adequate both statically and in fatigue to handle any loads associated with the air conditioning drive mechanism. Both normal operating and failure conditions (compressor lockup) should be considered. For example, on systems which are belt driven off the tail rotor drive, all components should be substantiated at the highest torque, shear, and moment loads that can be imposed by the belt drive (compressor seizure as well as compressor start), in combination with the loads associated with max transient tail rotor drive torque.

(2) The compressor drive must not affect the normal function of the drive system. Additional load on the gearbox or the drive pulley should not cause a gearbox temperature increase (§ 27.1041). Exceeding the gearbox temperature limit can cause stud loosening.

(3) The mounting of a bracket (for a compressor) or an idler pulley on the transmission top case should not affect the structural integrity or the corrosion protection of the transmission. If a compressor/blower is mounted to the gearbox, the overhang moment (which is created by the weight of the compressor and its center of gravity distance), should not exceed the mount limit. The addition of a bracket which picks up several existing top case-to-main case attachment studs may provide an additional path for water to enter and corrode the cases around the studs. In some cases, the studs may not be adequate to carry the additional load, because the thickness of the top case where each of these studs is typically individually controlled could result in the bracket warping upon installation. This warping results in unequal axial clamp-up at the studs, which further aggravates the stud loading and may also lead to significant case fretting. Also, the original studs may not be of adequate length to maintain proper thread extension through the nut after the bracket is installed.

(4) In the event of a compressor seizure, it should be substantiated that no damage to the primary drive system or aircraft structure can occur. On belt driven installations, no damage to the primary drive system should occur due to burning or flailing belts. On a shaft driven compressor/blower installation, the shaft shear section should fail before exceeding the gearbox torque limit. When the shear section fails, the

shaft should be contained or otherwise prevented from interfering with the drive system or flight controls. Similarly, a failure of the compressor or drive belts should not damage the drive system or interfere with the flight control mechanism.

(5) The mechanically-driven compressor should not adversely affect the (vibration) dynamic characteristics of the drive system in any operating condition (§ 27.907(c)). Maximum vibration levels should be given in engine/drive system installation data (§§ 27.901(b) and 27.927(a)).

h. Flight Analyst/Pilot Considerations.

Update Rotorcraft Flight Manual supplements (RFM) to show performance effects. If the installation is such that it interferes with engine inlet airflow, then determine any performance loss, evaluate inlet distortion, and validate turbine engine operating characteristics. Reference §§ 27.45 and 27.939. TIA should include operational tests such as intended function and abnormal/emergency operation. Conduct EMI tests and evaluate the RFM supplement. Reference §§ 27.1581, 27.1583, 27.1585, and 27.1587.

i. Safety Devices / Failure Mode Effect Analysis

(1) SAFETY DEVICES:

(i) Automatic Load shedding
(ii) Current Limiter
(iii) Compressor Temperature Limiter
(iv) Compressor Electric Motor temperature limiter
(v) Compressor Discharge pressure limiter
(vi) Oil separator / Injector
(vii) Containment shrouds
(viii) Belt guard
(ix) Pressure line gallery cover
(x) Ignition source protection (Freon is flame suppressant)

(2) FAILURE MODE EFFECT ANALYSIS: A Failure Mode Effect Analysis is crucial to the safety evaluation of the systems. Consider the areas given below:

(i) The overpressure safety system assures there is a means to shut the system down prior to a critical pressure developing (overpressure switches, blowout plugs, redundant circuit breakers, etc.).

(ii) An electrical load analysis should show that the failures in the air conditioning system do not jeopardize the safe operation of flight essential and flight critical airborne systems.

(iii) For systems driven by engine/transmission/drive shaft, a powerplant evaluation should be made to determine power available, vibration characteristics, etc.

(iv) Coupling/drive belt failure and its effect on adjacent components.

(v) The area around the condenser and receiver dryer (and any other high-pressure components) to determine if there are any critical components in the vicinity that could be damaged if a burst line occurs.

(vi) Assure that the Condenser blower/fan construction is such that if the fan or impeller fails, the pieces will not damage other components or helicopter structure (§ 27/29.1461).

(vii) The design should be such that Freon leakage cannot be ingested into the engines (§ 27.1309). Freon is an excellent fire suppressant. Ensure that no pressure relief valve or blow out plug (on the receiver dryer) is located inside the cabin. Quantities of Freon should also be prevented, as much as possible, from entering the cabin in the event of a leak. The rapid expansion of liquid Freon to its gaseous state in the close proximity of the flight crew could be disconcerting (could fog up the cabin). Liquid refrigerant, if allowed to strike the body, could cause frostbite, and if allowed to strike the eye, can cause blindness.

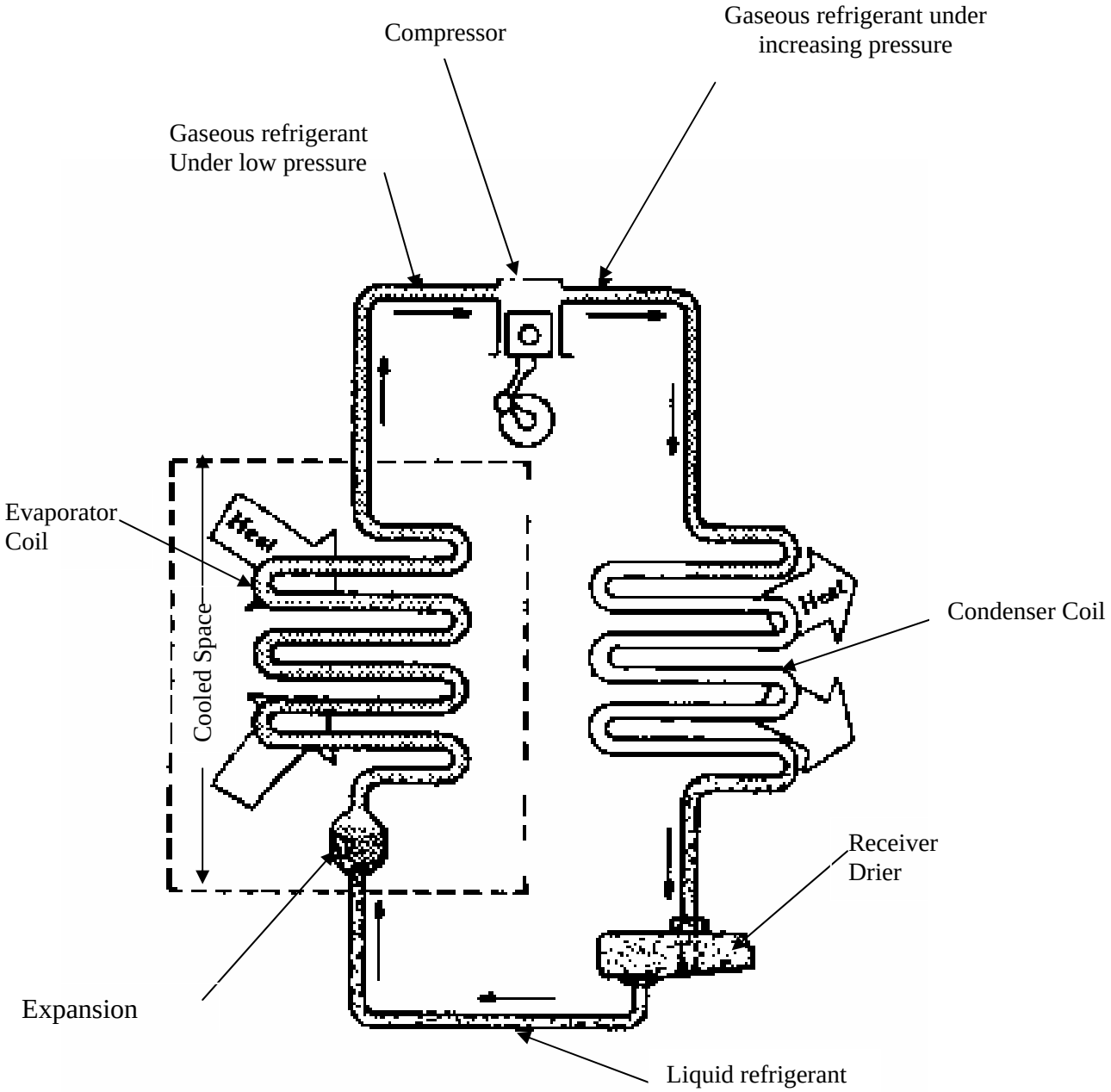

REFRIGERATION CYCLE

Figure AC 27.MG 14-1

INTENTIONALLY
LEFT
BLANK

CHAPTER 3
AIRWORTHINESS STANDARDS
NORMAL CATEGORY ROTORCRAFT

MISCELLANEOUS GUIDANCE (MG)

AC 27 MG 15. AIRWORTHINESS APPROVAL OF ROTORCRAFT HEALTH USAGE MONITORING SYSTEMS (HUMS)

a. Purpose. The purpose of this section of the AC (AC 27 MG 15) is to provide guidance to achieve airworthiness approval for rotorcraft Health and Usage Monitoring System (HUMS) installation, credit validation, and Instructions for Continued Airworthiness (ICA) for the full range of HUMS applications. Mandatory terms used in this section of the AC, such as “must", are terms used only in the sense of ensuring the applicability of these particular methods of compliance when the acceptable means of compliance described herein are used. This section of the AC does not change regulatory requirements and does not authorize changes in, or deviations from, regulatory requirements. This section of the AC establishes an acceptable means, but not the only means of certifying a rotorcraft HUMS. AC 27 MG 15 addresses the most complex/extensive HUMS; systems of lesser complexity may be addressed by use of only the parts of this section of the AC that are pertinent. HUMS applications in the Catastrophic criticality category are not addressed herein.

b. References and Related Documents.

(1) Federal Aviation Regulations (FAR) Parts 21, 27, 33, 91, 125, 127, 129, 133, 135, 145 – Corresponding European Joint Aviation Requirements (JAR) 21, 27, JAR E, JAR-OPS 3.

(2) FAA Advisory Circular AC 27-1B and the European corresponding ACJs, AMJs where applicable.

(3) Standards - Latest revision of RTCA/DO-160/ED-14, RTCA/DO-178/ED-12, SAE documents ARP 4754, and ARP 4761.

c. Background.

(1) Various types of HUMS have been developed, and they are likely to be used more in the future. Initially, these systems were installed to show the feasibility of gathering meaningful data to modify required maintenance and/or operational actions. The degree of qualification required for this type of installation is relatively low. However, there is an increasing number of certification applications to install HUMS and use its data to intervene in maintenance and/or operations of the rotorcraft. This type of

installation requires a higher degree of qualification, commensurate to the criticality of the most severe effect of the intervention action(s) on the rotorcraft.

(2) HUMS typically consists of a variety of onboard sensors and data acquisition systems. The acquired data may be processed onboard the rotorcraft or on a ground station (or a combination of both) providing the means to measure against defined criteria and generate instructions for the maintenance staff and/or flight crew for intervention.

(3) The certification of HUMS must address the complete process, from the source of data to the intervention action. There are three basic aspects for certification of HUMS applications: installation, credit validation, and Instructions for Continued Airworthiness (ICA). These aspects are not totally independent and do have varying interactions with each other.

d. Definitions.

(1) END-TO-END: The term "end-to-end" as used in the text is intended to address the boundaries of the Health Usage Monitoring System (HUMS) application and the effect on the rotorcraft. As the term implies, the boundaries are the starting point that corresponds with the airborne data acquisition to the result that is meaningful in relation to the defined credit without further significant processing. In the case where credit is sought, the result must arise from the controlled HUMS process containing the three basic requirements for certification as follows:

(i) Equipment installation/qualification (both airborne and ground),

(ii) Credit validation activities, and

(iii) Instructions for Continued Airworthiness (ICA) activities.

(2) HUMS: Equipment, techniques, and/or procedures by which selected incipient failure or degradation and/or selected aspects of service history can be determined.

(i) Health Monitoring System: Equipment, techniques, and/or procedures by which selected incipient failure or degradation can be determined.

(ii) Usage Monitoring System: Equipment, techniques, and/or procedures by which selected aspects of service history can be determined.

(3) Credit: To give approval to a HUMS application that adds to, replaces, or intervenes in industry accepted maintenance practices or flight operations.

(4) Application(s): A HUMS process implemented for a distinct purpose(s).

(5) Criticality (1309): This term describes the severity of the end result of a HUMS application failure/malfunction. Criticality is determined by an assessment that considers the safety effect that the HUMS application can have on the aircraft. There are five criticality categories as follows:

(i) Catastrophic: Failure conditions, which would prevent continued safe flight and landing.

(ii) Hazardous/Severe Major: Failure conditions, which would reduce the capability of the aircraft or the ability of the crew to cope with adverse operating conditions to the extent that there would be:

(A) A large reduction in safety margins or functional capabilities,

(B) Physical distress or higher workload such that the flight crew could not be relied on to perform their tasks accurately or completely, or

(C) Adverse effects on occupants including serious or potentially fatal injuries to a small number of those occupants.

(iii) Major: Failure conditions which would reduce the capability of the aircraft or the ability of the crew to cope with adverse operating conditions to the extent that there would be, for example, a significant reduction in safety margins or functional capabilities, a significant increase in crew workload or in conditions impairing crew efficiency, or discomfort to occupants, possibly including injuries.

(iv) Minor: Failure conditions which would not significantly reduce aircraft safety, and which would involve crew actions that are well within their capabilities. Minor failure conditions may include, for example, a slight reduction in safety margins or functional capabilities, a slight increase in crew workload such as routine flight plan changes, or some inconvenience to occupants.

(v) No-Effect (Non-hazardous class): Failure conditions which do not affect the operational capability or safety of the aircraft, or the crew workload.

(6) Integrity: Attribute of a system or a component that can be relied upon to function as required by the criticality determined by the Functional Hazard Assessment (FHA).

(7) Mitigating Action: An autonomous and continuing compensating factor which may modify the level of qualification associated with certification of a HUMS

application. This action becomes a part of the certification requirements and, as such, is required to be performed as long as that certification requirement is not changed by a subsequent re-certification. An example of a mitigating action is a pilot's comparison of airborne HUMS data with aircraft instrument data.

(8) Commercial Off-the-Shelf (COTS): This term defines equipment hardware and software that is not qualified to aircraft standards. An example of COTS equipment hardware and software is a personal computer (PC) and its operational software.

(9) Independent Verification Means: An independent process to verify the correct functionality of a HUMS application on a ground station that utilizes COTS. The intent of independent verification is to gain some degree of confidence in the COTS operational reliability.

NOTE: This process may be discontinued when sufficient confidence in the application has been achieved.

(10) Synthesis: The process of evaluating service history and any other relevant data with the objective of validating and, if necessary, refining the performance of an approved credit.

e. Certification Approach.

(1) There are three basic aspects to Health Usage Monitoring Systems (HUMS) certification. Certification of HUMS must address all three. The three aspects are installation, credit validation, and Instructions for Continued Airworthiness (ICA). These aspects are not totally independent and do have varying interactions with each other. A method to address these aspects is provided by the approach herein. Installation includes all the equipment needed for the end-to-end application that is associated with acquiring, storing, processing, and displaying the HUMS application data, including airborne and ground based equipment. Credit validation includes evidence of effectiveness for the developed algorithms, acceptance limits, trend setting data, tests, etc., and the demonstration methods employed. A plan is needed to ensure continued airworthiness of those parts that could change with time or usage and includes the methods used to ensure continued airworthiness.

(2) The certification process should begin with the declared application intent, and determination of the resultant criticality. This declared intent should consider whether this application is for credit, that it adds to, replaces, or intervenes in maintenance practices or flight operations. When the declared intent is for credit, the end-to-end criticality for such an application should be determined and used as an input to establish the integrity criteria. If the declared intent is for non-credit, it may be certified as long as it can be shown that the installation of the equipment will not result in a hazard to the aircraft.

(3) The end-to-end criticality can be determined by performing a Functional Hazard Assessment (FHA). The integrity level is required to be equivalent to the determined end-to-end criticality. Compliance with the criticality level established by the FHA must be demonstrated. This may be achieved by a combination of application qualification plus appropriate mitigating actions.

(4) Applications are often qualified to a low level of integrity due to the assessment of criticality; however, it may be desirable to transition to a higher qualification level for future uses. Transition from one level of integrity to another will require re-evaluation.

NOTE: A certification plan may be provided to assist in the certification process. At a minimum, this plan should address the proposed means of compliance to each applicable paragraph of this advisory circular for a given application. Early submittal of this plan to the regulatory Authority is recommended.

f. Installation. Installation approval must cover systems and equipment that acquire, store, process, and display HUMS data and includes the airframe installation, or any one of these functions for a particular application. AC 27 MG 15 will address the most complex/extensive HUMS; systems of less complexity may be covered by use of only the parts of this AC that are pertinent. Different systems exhibit varying capabilities and configurations. Additionally, there may be different functional distributions between airborne and ground based equipment. HUMS equipment requirements consist of common requirements plus the unique requirements of airborne and ground based equipment.

(1) Common Requirements. A common requirement is one that applies to airborne, ground based, and installation equipment. These common requirements are discussed below.

(i) Criticality Determination.

(A) Criticality determination is a primary decision point relating to the depth of requirements for certification. The intended application can range from systems that acquire data for proof of concept only, to a system that acquires and processes data to determine if a life-limited part should be replaced. This range of applications will have a corresponding range of criticality for the systems from No Effect to Hazardous/Severe-Major. Systems in the Catastrophic criticality category are not addressed in AC 27 MG 15.

(B) If any credit is to be gained, the general guidelines for determination of criticality levels will be either Minor, Major, or Hazardous/Severe-Major. They will be in agreement with the resulting effect of the end-to-end criticality assessment.

(C) Typical examples of applications which may be classified as Catastrophic are as follows :

(1) Applications providing cockpit warning(s) which are the only means of detection with associated flight manual instructions to land immediately.

(2) System applications, for which constantly misleading information could be assessed as leading to a Catastrophic condition, must be designed to either detect these errors (e.g. Built-In-Test, system redundancy, etc.) and/or be tolerant to these errors (i.e., procedural, etc.).

(D) The Functional Hazard Assessment (FHA) may be a preliminary document to the Preliminary Safety Assessment (PSA) or a part of the PSA. The FHA is a top down analysis (which should involve pilots and flight analysts as well as engineers) that starts with the hazards to the rotorcraft and traces these hazards to the system, subsystem, and component level in the areas affected by HUMS. This type of analysis starts with the determination of what undesirable effects can occur as a direct or indirect result of using HUMS for maintenance or operational actions. The level of severity associated with this effect will result in assigning a criticality level that uses the definitions of criticality contained herein.

(E) The final level of equipment qualification may not only be the result of technical considerations, but also of other mitigating actions, of which there are many types. Many of these actions can result in a reduction of qualification levels for equipment.

(ii) Mitigating Actions.

(A) A mitigating action is an autonomous and continuing compensating factor which may modify the level of qualification associated with certification of a HUMS application. These actions are often performed as part of continued airworthiness considerations and are also an integral part of the certification. As such, the continuation of certification limitations, where appropriate, must be included in the Instructions for Continued Airworthiness (ICA). Mitigating actions are subjective in nature and are an intended method(s) of application where the pre-mitigated levels of integrity are defined.

(B) Applications that use COTS software and therefore may not be fully qualified applying RTCA/DO-178/ED-12 methodology may be accepted by alternative qualification methods as stated in paragraph f(3). Therefore, the subsequent use of mitigating actions that are of themselves of a subjective nature should be approached with caution. A mitigating action must be based upon the integrity level derived from the FHA.

(C) If the mitigating action is an operational consideration, the same concerns apply for continuing the mitigating action. The mitigating action should be recorded in the certification limitations and in the approved flight manual.

(iii) Performance. There must be minimum end-to-end performance criteria consistent with the application's intended use. Performance criteria, as a minimum, should consider accuracy, timing/sampling, resolution, event recognition, and consistency. The HUMS signal source must be compatible with the determined qualification level. Tests should be conducted to demonstrate that these criteria are met.

(2) Airborne Equipment Installation. Airborne equipment and the associated installation qualification procedures are the same as for any other airborne equipment. The installation qualification and the equipment qualification may be considered two separate activities although there is an obvious relationship between them. Signal independence, irrespective of method of implementation, should exist to the extent that acquisition of HUMS signals should not compromise the level of safety or reliability of functions provided by other equipment as a result of signal sharing.

(i) Equipment Installation. Equipment not approved by other methods must be approved as part of the installation and must consider overall system requirements.

(A) Equipment Qualified as Part of Installation. Equipment qualified all or in part as a part of the installation includes minor and major parts. Examples of minor parts are: connectors, common usage relays, diodes, etc. Examples of major parts are non-prequalified equipment (equipment not TSO'd or not qualified under the TSO to the required level for installation approval), consisting of significant system components and as transducers with their interfaces. Equipment qualification must consider environmental qualification (RTCA/DO-160/ED 14) including high intensity radiated fields (HIRF) and lightning.

(B) Software. RTCA/DO-178/ED-12 should be used for the software development standard. (See following figure for typical airborne application process for software not containing COTS.)

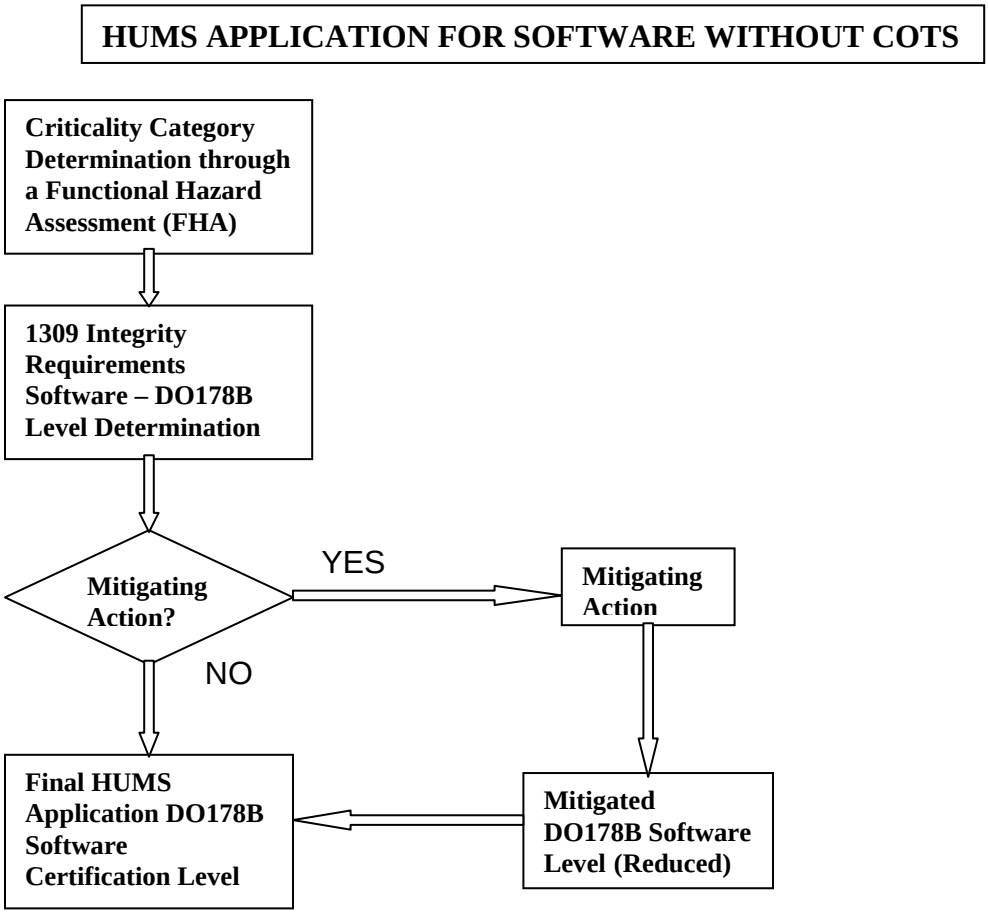

FIGURE AC 27 MG 15-1. Flow chart for use of Mitigating Actions applied for reduction of Software Level.

(ii) Installation Specific Considerations. The overall installation considerations should include, as a minimum, supply of electrical power, environmental conditions, system non-interference, and human factors if operations are affected.

(A) Supply of Electrical Power. An adequate source of electrical power for HUMS must be provided. The reliability of the power source must be commensurate with the required equipment qualification level. There should be no unacceptable reduction in the level of safety or reliability for other equipment as a result of acquiring power for HUMS.

(B) Electromagnetic Compatibility. Electromagnetic compatibility (EMC) must be addressed. Complex systems may require an EMC test plan, which includes a matrix of aggressors versus victims. The end result should be to assure that HUMS does not interfere with or is not affected by any other installed equipment.

(3) Ground Based Equipment Installation.

(i) Ground based equipment is typically used to process and display the data collected by airborne means. This processed data will ultimately be used to make decisions pertaining to some intervention action or provide data to other processing means to make the intervention action determination. Since the ground based equipment may be an important part of the process for determination of intervention actions, its integrity and accuracy requirements must be the same as any other part of the HUMS process.

(ii) The determination of compliance to the integrity requirements for ground based equipment is difficult when it is recognized that this equipment may, for the most part, be commercial and not necessarily designed specifically for the HUMS application. This section is intended to allow for the possibility of systems that contain COTS hardware and software, where the hardware is likely to be a personal computer and the operational software is COTS. The determination of compliance to the integrity requirements for COTS is based on equivalence, which is subjective. COTS service history alone will not be sufficient to comply with the requirements herein. Any ground based processing equipment that consists of commercial hardware and software must have satisfactory service history and an independent means of verifying the results of the processing. This independent verification means may be discontinued with the certifying Authority's agreement to modify the original HUMS approval and remove this requirement after significant quantities of the processed data consistently agree with the verifying means.

NOTE: The suggested processes contained in this document for acceptance of a ground based system that possibly includes COTS hardware and software is limited to ground based equipment for HUMS applications only. The integrity determination methods for systems that do not contain COTS is the same as described for the airborne systems.

(A) Independent Verification Means. The required independent verification means may consist of any one of many methods. Independent verification means may parallel only the ground based system processing or parallel all or any portion of the process that includes the COTS equipment processing. Some acceptable methods may include the following:

(1) Physical inspection(s).

(2) Redundant processing by a second dissimilar PC with different COTS from the primary processor.

(3) A combination of physical inspection(s) and independent dissimilar processing.

(4) Satisfactory comparison of processed directed action to actual maintenance performed as a result of inspection. This approach would require data collection on the system prior to actual credit application. The amount and duration of data collection should be agreed between the applicant and the certifying authority at the beginning of the project on a case-by-case basis.

(5) Any other independent means of verifying the accuracy/integrity of the equipment including software by a satisfactory comparison to the directed action of the HUMS processed data.

(B) Integrity Level Considerations. The methodology is the same for different integrity level requirements as they relate to COTS hardware/software, but the compliance requirement will vary. The processes described in the previous and subsequent paragraphs of f(3) should be applied to meet the initial integrity requirements for the criticality categories of Hazardous/Severe Major and Major. Minor criticality category level will also require qualification by this process, except that independent verification can be performed after certification, provided that an approved plan is submitted for this activity. Other applications that do not employ COTS will use standard engineering practices to satisfy the integrity level considerations. Modification of Approved Systems. Changes to the equipment including software should be qualified on a case-by-case basis that is dependent on the effect on the integrity and functionality of the system. If mitigation had been successfully demonstrated for the original configuration, the mitigation must be shown to provide the same level of integrity for the changed configuration.

(C) Ground Based Equipment Hardware. This hardware may consist of data processing, display, and possibly printing equipment or other accessories. The hardware must be compatible with the intended application and software. The independent means of verification activity is required due to the use of COTS hardware.

(D) Software. Most systems will employ two types of software. One type is the operational software and the other is the HUMS specific software. The operational software may be COTS. (See following figure for typical ground based application process for HUMS specific software using COTS as an operational software.)

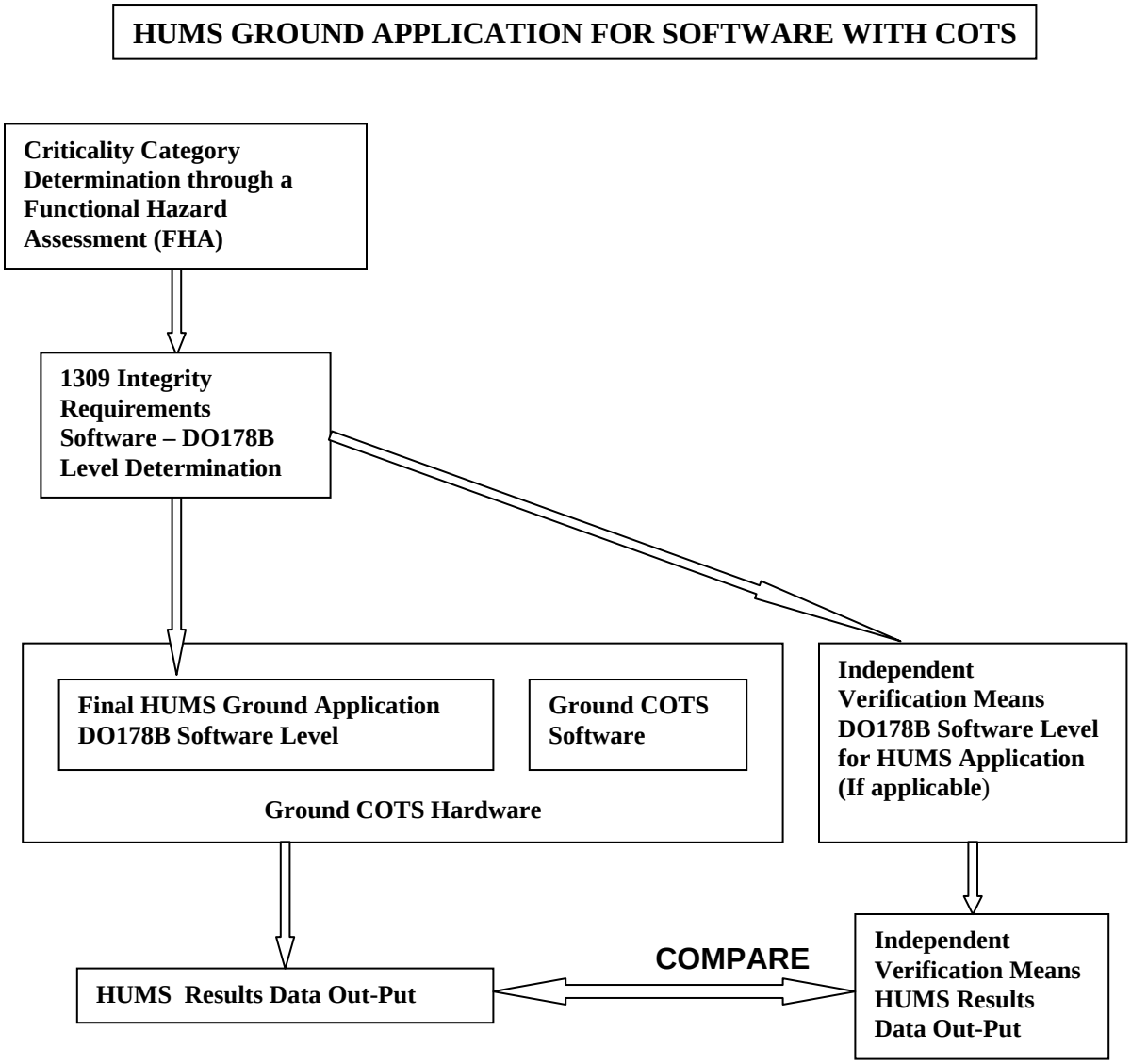

FIGURE AC 27 MG 15-2. Flow chart for application of HUMS specific software with a ground base that uses COTS software for operational software.

(1) COTS. This type of software can only be accepted by subjective considerations, such as service history, independent verification means, and design of the system to limit access to the operational COTS software to make changes. The independent means of verification activity is required due to the use of COTS software.

(2) HUMS Specific Software. This software should be developed to the integrity level required by the system criticality assessment using RTCA/DO-178 as the

standard. This system determined level should be a result of the end-to-end criticality assessment and, in general, the same as the airborne software. Use of mitigating actions is dependent on constraints stated in paragraph f(1)(ii).

(E) Data Processing. Data processing equipment and software should have the capacity to process the amount of data required. It should not introduce errors or provide out of specification accuracy for any parameter. The speed of processing should not be limited, by the hardware or software, to an unacceptable rate. The acceptability of speed will depend on the amount of data to be processed and the specified performance for HUMS data processing. The speed should be reasonable to accomplish data processing in a reasonable time for the particular HUMS application. Hazardous/Severe Major or Major criticality applications that contain COTS should be part of a dedicated system or demonstrate adequate protection for the higher level processing from anything else processed on the same equipment. Subject to a favorable comparison to the required independent verification means, Minor criticality applications need not be part of a dedicated system.

(F) Display and Peripheral Equipment. The display, for most cases, may be a part of the processing equipment or closely interface with it. It must be compatible with other parts of the system and provide a clear usable presentation.

(G) Data Communications. Network applications, modem interfaces, and other system sharing and transmission features may be utilized for integrity levels associated with Major and Minor criticality categories, provided that the independent verification means covers the use of these features. Integrity levels associated with Hazardous/Severe Major criticality categories may utilize these features only if sufficient protection can be shown to assure that this level of integrity is maintained throughout any foreseeable failure/malfunction or mistake in any associated application, in addition to required independent verification means.

g. Credit Validation. HUMS applications for which credits are sought must be validated. For each application, evidence shall be provided that the physics involved is understood and therefore that the monitoring technique/algorithm/parameter, rejection criteria, and associated intervention actions are well chosen. The designer of the component/equipment to be monitored is the most logical choice for this determination. However, in some cases the source can be from any organization as long as the validation criteria herein can be satisfied. If changes are proposed to an approved system, re-evaluation is required to ensure existing credit(s) are not invalidated. The degree of effort will vary and depend on the application type, the credit sought, and the consequences of failure or any other malfunction. The validation process would generally need to include the following:

- Description of application and associated credit.
- Understanding of the physics involved.

- Validation methodology.
- Introduction to service.
- Continued airworthiness (synthesis).

NOTE: Early notification to the regulatory Authority of the credit type and the proposed method for validation is recommended.

(1) Description of Application and Associated Credit.

(i) There are many types of HUMS credits with different levels of criticality. Some may be the introduction of new maintenance practices, in place of the established maintenance practices, and others may be the introduction of additional safeguards for safety where all standard practices are retained.

(ii) It is important to fully evaluate and describe the proposed credit and the worst effect on the rotorcraft should the application fail or malfunction. This evaluation is needed to determine the system criticality, the system installation integrity requirements, and the depth and scope of the credit validation effort.

(2) Understanding the Physics Involved.

(i) The mechanisms of failure and/or degradations associated with the requested credit should be understood. This includes how a failure occurs and/or at what rate the degradation progresses and a determination of the point where intervention action is necessary. For some complex applications, this may include supporting information from validated analytical tools such as finite element analysis and fracture mechanics.

(ii) These understandings should be used to determine the four important characteristics of a HUMS application.

(A) The technique to be used.

(B) The appropriate alert limits, including trending where appropriate.

(C) The appropriate intervention action.

(D) How often to monitor to give optimum opportunity for the intervention action to be effective.

(iii) This should also recognize the different characteristics of the failure/degradation and determine when trending or a step function is most appropriate.

(3) Validation Methodology. All HUMS applications should have their validation process based on suitably representative physical data. This process may use direct or indirect evidence, or a combination of the two, depending upon the credit type and the criticality on the aircraft of any HUMS failure or malfunction.

(i) Direct Evidence.

(A) When the HUMS application is classified as Hazardous/Severe Major, then direct evidence must be gathered. Examples of where this might be the most appropriate method include maintenance tasks such as vibration checks for imbalance/misalignment of high energy rotating equipment, fatigue life counting, or going "on-condition" for flight critical assemblies.

(B) Direct evidence is required for establishing that the HUMS application is sensitive to and obeys predicted response rules for the damage type, giving consistent alerts. This evidence may be gathered from several sources as follows:

(1) Actual service experience on HUMS equipped aircraft,

(2) "Seeded tests" (where the wear, defect, or deterioration is introduced, allowed to develop, and the technique response verified), and

(3) On- aircraft trials, investigating cause and effect (for example, introducing degrees of imbalance and calibrating the techniques response).

(C) Tests should be representative of the aircraft for which the credit is being sought and of test conditions representing the flight regime that would prevail when data is normally gathered (e.g., cruise). It should be established that the evidence gathered from on-aircraft ground trials or rig based seeded tests is valid in flight.

(ii) Indirect Evidence.

(A) When the HUMS application is classified as "Major" or lower, indirect evidence may be gathered. Criteria for this approach includes a criticality determination of Major or lower and either or both; application to "on-condition" maintenance actions, and/or lowering the probability of undetected failures. Monitoring of a high number of potential failure modes can collectively determine the probability of undetected failures. Here, it may not be practicable to generate direct evidence for each failure.

(B) Proven analytical methods may be combined with sound engineering judgment to provide calculated/derived criteria; tests can be performed to validate these criteria. Model based analytical methods for predicting damage progression (e.g., finite element analysis and fracture mechanics) may allow for a validation by claiming analogy with 'direct' evidence generated for other aircraft types or equipment. However, to more

fully validate this analogous data set, a degree of direct evidence for the actual equipment being monitored is still likely to be necessary to prove similarity of application. This might be achieved by performing an appropriate number of seeded defect tests and, in effect, "sampling" the range of failure types contained.

NOTE: For both direct and indirect evidence, the whole system must be validated end-to-end.

(4) Controlled Introduction to Service.

(i) For some credit applications, full validation and implementation may be possible during the development period. However, for many HUMS techniques, a plan for a controlled introduction to service may be necessary to fully validate the credit.

(ii) There must be provisions in the certification process to instruct the continued airworthiness effort to ensure compliance with the aforementioned plan.

(iii) During the implementation of this plan, data is accumulated by operational aircraft, and from this data, refinements and adjustments to the original criteria can be made. This period may also allow a proposed credit to be operated in parallel with alternative or standard procedures when it is necessary to gain additional in-service validation by way of back-to-back comparison

(iv) The plan should include procedures and provisions for this controlled period and should include clear goals by which progress and ultimately termination of this phase can be measured. The plan may include a multi-credit HUMS that will require a phased introduction of credits.

(5) Continued Airworthiness and Synthesis of Credit. Normal and established procedures will prevail for HUMS as for all other continued airworthiness matters. Arrangements should be made to validate the performance of an approved credit throughout its service use. Provisions should be made to allow for the synthesis of the service experience with relevant engineering evidence from rejected components, development testing, seeded testing, etc. Any necessary or desired modifications to the HUMS application or the component/equipment being monitored must be re-evaluated.

h. Instructions for Continued Airworthiness (ICA) and Other Requirements for Health and Usage Monitoring System (HUMS). This section addresses the ICA, operator's HUMS program, HUMS training, and Master Minimum Equipment List (MMEL) revision to incorporate HUMS.

(1) Instructions for Continued Airworthiness. The applicant for HUMS is required to provide ICA developed in accordance with FAR/JAR Part 27 and Appendix A. This section provides supplemental guidance with addressing aspects unique to

HUMS. The applicant may be an airframe manufacturer, HUMS equipment manufacturer, or an operator. The ICA should address HUMS integration with the aircraft. This section addresses both airborne and ground based systems and equipment.

(i) HUMS ICA Items. The applicant must address the following subjects in addition to FAR/JAR Part 27. These subjects should address both airborne and ground based systems and equipment unless specifically indicated otherwise.

(A) Control and operating instructions must be provided for each element of HUMS, and where applicable, include data acquisition, transfer processing, display, configuration management, and resulting actions.

(B) Acceptance and rejection criteria and associated actions must be defined.

(C) A procedure is required when the system becomes inoperative because data is missing.

(D) When required, there must be a procedure for collecting and transferring HUMS data when the aircraft is away from the main HUMS data processing base.

(E) Provide a procedure for independent verification as defined in paragraph f(3), if applicable.

(F) Provide a procedure for implementing mitigating actions, when mitigating actions are applied.

(G) Provide a procedure for implementing controlled introduction to service instructions as defined in paragraph g(4), if applicable.

(H) Provide a training program on HUMS airborne and ground based systems and equipment.

(I) The airworthiness limitation section must be amended to address the following, if required:

(1) Requirements for independent verification and associated procedures.

(2) Requirements for mitigation actions and associated procedures.

(3) Requirements for controlled introduction to service and associated procedures.

(ii) Ground Based System and Equipment. A procedure must be defined to ensure the security of the ground-based system and equipment and the integrity of the HUMS data.

(2) Owner/Operator's HUMS Program.

(i) General. An owner/operator that installs and utilizes health and usage monitoring equipment on aircraft and intends to request maintenance credit will need a program. This program and revision to existing maintenance and/or inspection programs must be submitted to the aviation Authority for approval. This is due to the fact that maintenance credit may change existing maintenance inspection, overhaul requirements, and/or life limits.

(ii) HUMS Program Items. Regardless of the size and complexity of the health and usage monitoring equipment, the HUMS program must contain the following:

(A) A system must be provided for tracking the HUMS monitored component/system, including identification of component/system, recording requirement, tracking procedure, and other related activities.

(B) A system to assure that a maintenance credit must be maintained. The historical HUMS data must be traceable when such components/assemblies are transferred between aircraft.

(C) A procedure for new or overhauled HUMS monitored components.

(D) A procedure to address inoperative HUMS in accordance with paragraph j(1)(i)(C).

(E) A means for implementing procedures specified in paragraph j(1)(ii).

(F) A procedure for adjusting maintenance credits.

(G) An organization with clearly defined responsibilities to collect, analyze, and act upon the HUMS data.

(H) A procedure for implementing the training program specified in paragraph j(1)(i)(H).

(I) Where appropriate, a procedure for implementing the controlled introduction to service plan. See section g(4), Controlled Introduction to Service.

(iii) Ground Based System and Equipment.

(A) A procedure for troubleshooting and testing of the HUMS.

(B) A procedure for revising and using the operator's Minimum Equipment List (MEL) for HUMS.

(iv) Master Minimum Equipment List (MMEL)/Minimum Equipment List.

(A) The MMEL may need to be revised to include the HUMS equipment. Once the MMEL contains the HUMS equipment, the operator can revise their MEL to include HUMS and submit the MEL to the aviation Authority for approval.

(B) The aviation Authority should coordinate with engineering in evaluating the revised MEL.

NOTE: Any MMEL allowance should be determined considering the criticality of the 'credit' effect resulting from the HUMS application(s). MMEL allowances should be substantiated based on a Functional Hazard Assessment (FHA).

CHAPTER 3
AIRWORTHINESS STANDARDS
NORMAL CATEGORY ROTORCRAFT

MISCELLANEOUS GUIDANCE (MG)

AC 27 MG 16. CERTIFICATION PROCEDURE FOR ROTORCRAFT NIGHT VISION IMAGING SYSTEMS (NVIS) LIGHTING EQUIPMENT

a. Background

(1) This guidance is designed to assist in the certification of NVIS internal and external aircraft lighting systems. It covers the two processes involved in NVIS lighting certification:

1. Installation and certification of the NVIS compatible lighting on the aircraft.
2. Certification of the NVIS lighting installation and cockpit compatibility with night vision goggles (NVGs).

Expanded guidance is found in RTCA/DO-275, Minimum Operational Standards for Night Vision Imaging Systems, dated 12 October 2001. Additionally, this guidance is meant for use with NVIS using night vision goggles and does not apply to other night or low visual environment enhancement devices (i.e., forward-looking infrared system (FLIR), enhanced vision system (EVS), etc.). Due to the fundamental effect NVGs have on visual perception and the inherent characteristics of NVIS technology, modifications to the aircraft to make it NVIS-compliant should always be considered a major alteration.

(2) The guidance in this MG is one method to show compliance with 14 CFR Part 27 regarding aircraft lighting modification for NVIS compatibility. The applicant should also be familiar with RTCA/DO-268, Concept of Operations: Night Vision Imaging System for Civil Operators, dated 27 March 2001.

NOTE 1: Aircraft that are intended for NVG operations must go through the NVIS certification process, whether modified or produced by the manufacturer. A night VFR approval does not constitute NVIS certification. In addition, some rotorcraft may not be suitable for NVIS certification due to factors such as cockpit obstructions, inability of pilots to move their heads while wearing NVGs, inability of the cockpit to accommodate a pilot wearing a helmet, etc.

NOTE 2: Certification scheduling should account for moon cycles and sky condition (lighting from starlight only, if possible). Type inspection authorization (TIA) flights should be accomplished in no-moon, clear sky conditions to avoid masking possible low illumination, incompatible lighting effects during the NVIS cockpit and NVG interface evaluations.

NOTE 3: Installation of a NVIS lighting system does not authorize the operator to use NVGs. The operator must coordinate with the FAA or Civil Aviation Authority oversight office to obtain operational authorization.

NOTE 4: Operational requirements for use of NVIS/NVG are found in FAA HBAT 04-02.

b. Revisions

(1) This revision focuses the guidance on NVIS lighting and NVG and NVIS lighting cockpit compatibility. Information on NVG certification is found in TSO-C164. Additional NVG and helmet interface information is also included in this MG.

(2) NVIS/cockpit evaluation guides/checklists can be found at http://www.faa.gov/aircraft/air_cert/design_approvals/rotorcraft/nvis/.

c. Definitions

(1) Cultural Lighting: Light emitted from cities, towns, residences, street lights, or other artificial sources. Cultural lighting may help or hinder the pilot's external view through NVGs depending on intensity, reflection off cloud cover, landing zone topography, etc.

(2) Night Vision Imaging System (NVIS). Integrates all elements (including the NVG, windshield, lighting system, etc.) required to successfully and safely operate an aircraft with the aid of NVGs.

(3) NVIS Lighting Component is any component intended for use with NVGs that emits or transmits light within the flight deck or other crew compartments, or that is attached to the aircraft exterior, and does not degrade NVG performance.

(4) NVIS Lighting System is an aircraft lighting system that has been modified or designed to incorporate NVIS lighting components. It provides adequate illumination, under day and night conditions, of instruments, displays, and controls for the unaided eye without degrading NVG performance. NVIS lighting systems must meet 14 CFR Part 27 lighting requirements.

(5) NVG Compatible. Aircraft internal and external lighting is NVG compatible if it does not adversely affect the NVG image.

(6) Aided flight is flight using NVGs to aid visual flight.

(7) Unaided flight is flight without NVGs or with the NVGs in a non-operational position.

(8) Transparencies: Windows, chin bubbles, overhead windows that the crew uses to look outside the aircraft.

d. Procedures

(1) General. One method to show compliance is outlined in this AC and includes evaluation of the NVIS lighting system and cockpit through both day, night ground, night aided, and night unaided flight evaluations.

(2) References:

(i) Regulatory

Section	Section
27.1	27.1387
27.21	27.1389
27.141c	27.1391
27.603(c)	27.1393
27.771	27.1395
27.773	27.1397
27.777	27.1399
27.785	27.1401
27.807b(3)	27.1501
27.853	27.1523
27.1301	27.1525
27.1303	27.1529
27.1305	27.1541
27.1307	27.1543
27.1309	27.1545
27.1321	27.1549
27.1322	27.1553
27.1351	27.1555
27.1357	27.1557
27.1367	27.1561
27.1381	27.1581
27.1383	27.1583
27.1385	27.1585

(iii) Other References

Ref Document	Title
TSO-C4C	Bank and Pitch Indicators
TSO-C8D	Vertical Speed Indicators
TSO-C67	Radar Altimeters
TSO-C164	Night Vision Goggles
AC 25-11	Electronic Displays
AC 20-152	Design Assurance Guidance for Airborne Electronic Hardware
AC 20-74	External Lighting
AC 20-88	Instrument Markings and Limits
RTCA DO-268	Concept of Operations, Night Vision Imaging Systems for Civil Operators
RTCA DO-275	Minimum Operational Performance Standards for the Integrated Night Vision Imaging System Equipment
SAE ARP 4754	Certification Considerations for Highly-Integrated or Complex Aircraft Systems
SAE ARP 4761	Guidelines and Methods for Conducting the System Safety Assessment Process on Civil Airborne Systems and Equipment

(3) Certification Basis. The NVIS design must comply with the aircraft certification basis. The use of NVIS is a new type of operation, which requires special considerations. The same aircraft design can be certified for other types of operation, such as Category A, Day visual flight rules (VFR), Night VFR, and instrument flight rules (IFR). The certification basis (reference 14 CFR § 27.1) of the aircraft must be appropriate for all certified types of operation, and may require adoption of later amendment levels of 14 CFR Part 27 or special conditions.

NOTE 5: NVIS operations in conjunction with Category A takeoffs and landings are beyond the scope of this section. Other special flying operations, such as agricultural or external loads, will require special considerations, and coordination with an operational specialist may be required to determine the scope of the certification evaluation.

(4) Additional NVIS equipment and components.

(i) Due to the limitations of NVGs, some additions to the crew station in the form of instruments or controls might be necessary to accomplish a successful NVG certification. Some examples of additional instruments (added to a night VFR only certified aircraft) are attitude indicator(s), vertical speed indicator(s), radar (radio) altimeter(s), generator or alternator of adequate capacity, and two-way radio communication equipment. For further detail on the need for these instruments, refer to RTCA DO-268.

(ii) NVG compatibility with the NVIS lighting and cockpit configuration will be assessed using NVGs meeting TSO-C164 requirements. NVG compatibility will also

be assessed using the type and model of NVG that the operator will use in their NVG operations.

(5) Installation Design.

(i) Mechanical Installation. Aircraft modifications should be made to (1) ensure compliance with the airworthiness regulations and (2) comply with the equipment manufacturer's recommendations. The designer should observe good engineering practices, in specifying material type, wire routing, fastener type, light switches and controls, edge distance, and ergonomic considerations (§§ 27.777, 27.1307, 27.785, and 27.1359).

(ii) Arrangement and Visibility. The mounting position of all instruments, switches, position labels, and controls should be visible to the pilot during unaided and aided flight and in all cockpit lighting conditions (day and night). Technical Standard Order (TSO) approval does not assure instruments will be acceptable in a particular cockpit installation or for all lighting conditions. The instruments, switches, and placards should be free from reflections. Warning, caution, and advisory annunciation devices should be conspicuous, NVG compatible, and clearly visible to the pilot (day and night). Gauge and instrument markings should be clearly seen and the colors of the markings maintained. (See §§ 27.771, 27.773, 27.777, 27.807b3, 27.853, 27.1301, 27.1321, 27.1322, 27.1381, 27.1555, 27.1557 and 27.1559, RTCA DO-275, and Advisory Circular 20-69.)

(iii) Interior Lighting. Internal lighting systems should not adversely affect the performance of the NVIS. Instrument markings and illuminated instrument markings must comply with § 27.1381 and AC 20-88 and should be demonstrated during aided and unaided operations. Colors should be uniform (different shades of red/amber/green are not acceptable) to avoid confusion. For example, different shades of red (NVIS red and aviation red) within the cockpit have not been accepted. Additionally, NVIS red with orange hue has not been accepted in cockpits with amber caution lights/indicators.

(iv) Exterior Lighting. External lighting systems should not adversely affect the performance of the NVIS. Compliance with §§ 27.1383 to 27.1401 and AC 20-74 should be demonstrated. External lighting should be evaluated under probable terrain, illumination, and environmental operating conditions (e.g., rain, snow, fog, dust, etc.). Consider modifying position lights with NVIS compatible lights. There are NVIS-compatible position lights available. Non-NVIS compatible position lights can cause unacceptable shadowing and interference with NVG performance in dark areas where there is little or no cultural lighting.

(v) Reflections and Glare. There should be no glare or reflections that interfere with unaided or NVG aided operations. Sources of reflection and glare could include aircraft interior surfaces (floor, panels, etc.), equipment, seats, etc. Compliance with §§ 27.771, 27.773, and 27.1381 should be demonstrated in the ground and flight test.

(vi) Controls.

(A) NVIS lighting controls should be readily identifiable and accessible.

(B) NVIS control design should minimize the probability of the inadvertent selection of incompatible light sources in the cockpit. The detrimental effects of incompatible light sources on the external view through the NVG should be minimized if there is a capability to select an NVIS incompatible light source

(C) NVIS Lighting should have a dimming range consistent with aided and unaided operations. Compliance with §§ 27.777, 27.1301, 27.1309, and 27.1381 should be demonstrated.

(D) Some installations incorporate master light switches to control special busses for the lighting systems. If this capability is provided, it should be evaluated to assure failure modes are not introduced that will result in the illumination of incompatible light sources or loss of all required lighting (§§ 27.1307 and 27.1367).

(E) Compliance with §§ 27.777, 27.1301, 27.1309, and 27.1381 should be demonstrated.

(vii) NVIS Power Sources. Determine whether the electrical power source capacity is adequate for the system installation under all foreseeable operating conditions including engine failure. Duplicate systems should be powered from separate busses and, in some cases, from independent sources if required by the airworthiness regulations (§§ 27.1309 or 27.1351).

(viii) Cooling Test. Systems and components that are added or modified (e.g., addition of filters to light sources) for NVIS operations should be tested in accordance with AC 27.1309 (cooling test procedures) for continued acceptability. This is important because the installation of a filter could result in an appreciable increase in a system or component temperature. This issue would be most critical for a system that remained brightly illuminated during daylight operations.

(6) NVIS Cockpit and NVG Integration:

(i) Accessibility and Workload.

(A) The NVIS configuration should not compromise the ability to perform all necessary duties. Scanning and control accessibility should be considered. The applicant should determine the representative flight profiles and environmental conditions under which the workload should be evaluated. The purpose of this evaluation is to ensure that the workload associated with NVIS operations does not compromise safety of flight. Compliance with §§ 27.771, 27.773, 27.777, and 27.1523 should be demonstrated.

(B) The rotorcraft characteristics need to be such that the workload is acceptable and the required instruments are within the pilot's primary scan when using NVGs. The design of the NVIS should consider flight into inadvertent instrument meteorological conditions (IMC) and unusual attitude recovery. Inadvertent IMC is defined for these purposes as loss of visual references, such as actual IMC, brownout, whiteout, etc. It is important to assess the transition from aided flight to instrument flight. Therefore, the applicant should plan this evaluation during all requested phases of flight (such as cruise flight or takeoff and landing, if requested).

(C) Assess the NVIS lighting for readability, uniformity, balance, light leakage, reflections, and degradation of NVG performance. An NVIS and NVG Cockpit integration checklist is provided at:

http://www.faa.gov/aircraft/air_cert/design_approvals/rotorcraft/nvis/.

Also, RTCA DO-275, Section 4.0, provides an expanded explanation.

(D) NVGs shall be TSO-C164 compliant. A cockpit evaluation should be accomplished with NVGs that meet the minimum TSO-C164 standards as well as NVGs the applicant intends to use in operations (if they exceed TSO-C164 standards). In no case will NVG's that do not meet or exceed TSO-C164 standards be approved for use in the cockpit.

(ii) Controls

(A) Accessibility of NVIS Lighting System Controls. Pilots should be able to readily identify, access, and operate, with one hand, the NVIS lighting controls in-flight from their normal seated position.

(B) Inadvertent Actuation of Controls. Appropriate protection should be provided to minimize the possibility of the inadvertent actuation of NVG controls and non-NVIS light sources.

(iii) Visibility.

(A) Windscreen. The windscreen and transparencies should not decrease NVG light sensitivities more than 12% or one resolution element on a tri-bar chart. If the aircraft has a windscreen anti-ice function, the windscreen should be evaluated with anti-ice on and off to assess effect on the NVGs. Operation of windscreen anti-ice should follow manufacturer's procedures and limitations.

(B) Glare and reflectivity. Glare and reflectivity can be produced from internal and external light sources.

(1) Internal light sources:

(i) Permissable reflections should be no worse than the original unaided lighting. However, NVGs may pick up more reflections than seen with unaided vision. Those reflections should be blocked to ensure they do not interfere with the pilot's ability to see outside the aircraft while wearing NVGs.

(ii) Glare can result from poorly filtered or fitted lighting. Additionally, if there are non-NVIS compatible light sources in other areas of the aircraft, they can cause interference. Assess light sources causing glare and develop mitigating solutions to keep them from interfering with the pilots view through NVGs.

(2) External Light Sources:

(i) Usually, external light glare or reflectivity is assessed during the night flight. Evaluating the effects of glare and reflections that interfere with NVGs from external aircraft lighting is very important when operating in remote, dark areas. There are NVIS compatible external aircraft lights available. Consider using them if operations are conducted in very dark areas where there is little to no ambient cultural lighting.

Methods to reduce glare or reflections caused by external aircraft lighting depend on where the light enters the cockpit and from what aircraft structure reflects the light. For example, light that reflects off of skids or wire cutters can be mitigated by use of non-reflective paint on the reflecting surfaces. Additionally, chin-bubble mats have been used to block light and reflections through the chin-bubble.

NOTE 6: If chin bubble mats are used, pay particular attention to:

(1) restrictions in the pilot's field-of-view through the chin bubble, particularly during take-off, landing, and hover operations, and

(2) the potential for the mat to be moved or dislodged during flight, thereby causing interference with the tail rotor pedals.

Use of chin bubbles mats should be evaluated during both ground and flight test.

NOTE 7: Some non-compatible lighting such as landing or taxi lights, search lights, etc.; can aid as well as hinder NVG operations. Their effects on NVGs in the specific helicopter flown should be assessed and recorded during integration evaluations.

(ii) Evaluation of external light sources that pilots could use to assist them with NVG flight should be evaluated for their effect on NVG performance. If the aircraft has landing lights, searchlights, or other lights that the pilots use, they should be assessed to evaluate their effect on the aided vision range. For instance, if the pilot uses a searchlight or landing lights to help assess landing area or while landing with NVGs, then the light's effect on the range of vision within and beyond the light boundaries should be evaluated and documented.

(iii) Sources of non-compatible light glare and reflections and any mitigating strategies developed should be recorded during integration evaluations.

(7) Ground and Flight Tests.

(i) The purpose of FAA certification tests is to verify that the rotorcraft meets the certification requirements for both aided and unaided operations. This will include an assessment of crew station(s) to ensure that the crew can effectively use all systems for both aided and unaided operations. These assessments may result in changes to the established limitations, or operating procedures of a rotorcraft (reference §§ 27.1581, 27.1583 and 27.1585). Appropriate flight test personnel should conduct the ground and flight tests.

(ii) Prior to requesting FAA certification flight tests, the applicant should submit the appropriate data, drawings, bench tests, component tests, environmental qualifications, installation configurations, and test equipment (including calibration) that were used to demonstrate compliance with the requirements to the appropriate certifying office. This will also include the manufacturer, type, and model of the NVG the applicant intends to use for NVIS operations.

(iii) Additionally, ground and flight test plans should include the types of operations for which the applicant intends to use the aircraft. For instance, dual pilot operations or training will require both a right and left pilot seat evaluation. EMS operations will require an evaluation of visibility from the passenger compartment and cockpit protection from passenger compartment lighting if not NVIS compatible.

(iv) Once submitted, the FAA will review the package along with the certification plan to determine compliance. After certification package acceptance, the applicant should coordinate final approval for the test plan and test schedule. The test plan and schedule should include all proposed tests to show compliance. The checklists, found at http://www.faa.gov/aircraft/air_cert/design_approvals/rotorcraft/nvis/ outline a test sequence. Another acceptable method of demonstrating compliance is described in RTCA DO-275, Section 4.0, and Appendices. Upon test plan acceptance, prior to commencing any certification tests (ground or flight), a conformity inspection should be performed. Once the conformity is performed, any changes from the conformed configuration (e.g., removing filters or changing bulbs in light sources) may, at the FAA's discretion, require another conformity inspection.

(v) The applicant is responsible for providing the appropriate pre-test requirements and providing the FAA certification office with the following:

(A) A list of test equipment to perform test (tri-bar charts, illumination source, illumination measuring device, NVG test set, or NVG eye lane).

(B) A description of the test facilities to be used (type of darkened location).

(C) A description of the flight area including cultural lighting, terrain, obstacles, and landing areas.

(D) Weather and illumination information including moon cycle, anticipated climatic conditions, etc.

(E) Any additional training necessary to operate in a NVIS environment (novel or new technology briefing).

(F) The flight equipment to be used (helmets, mounts, NVGs, flashlights, etc.).

(vi) Ground Test Procedures.

(A) To optimize the test program and minimize flight test risks, ground testing should be accomplished prior to flight test. This evaluation should be conducted from all crew stations intended to be used (including cabin) in NVG operations.

(B) Flight-testing should only be commenced when ground testing is satisfactorily completed. It is highly recommended that the schedule allow sufficient time between ground and flight test to resolve deficiencies discovered during ground testing. As a minimum, the NVIS/NVG Cockpit integration checklist should be completed. This checklist can be found at http://www.faa.gov/aircraft/air_cert/design_approvals/rotorcraft/nvis. Another acceptable test procedure and test sequence is provided in RTCA DO-275, Section 4.4.1, and Appendices.

(vii) Flight Test Procedures.

(A) Flight test should be scheduled for a low illumination night (no moon) preferably in an area where there is little cultural lighting. Evaluation of NVG and NVIS lighting integration should not be conducted in high ambient light conditions because some of the effects of inadequate cockpit lighting and reflections or glare will be masked.

(B) Prior to commencing the flight test evaluation, a daylight familiarization flight of the flight test area should be performed. Any specific flight regimes, maneuvers, terrain, or landing areas that will be used for the NVIS evaluation should be flown to familiarize the test pilots with possible hazards in the test area.

(C) For single pilot aircraft, if it is determined that the normal configuration of the aircraft is required for the flight evaluation, it may not be possible to install dual controls. In this case appropriate training and authorization may be required for the

FAA test pilot to conduct the in-flight evaluation. In addition, special test equipment may be installed during the evaluation to enhance flight test safety. If additional personnel are required for the evaluation, the appropriate crew stations will be installed.

(D) The flight test profile should consist of maneuvers representative of those performed during normal or special operations over terrain and cultural areas in various illumination and weather conditions. This test should include evaluation under low illumination conditions (e.g., no moon, and overcast sky, with little cultural lighting). As a minimum, the items in the flight test section should be completed. This can be found at http://www.faa.gov/aircraft/air_cert/design_approvals/rotorcraft/nvis. Another acceptable test procedure and test sequence is provided in RTCA DO-275, Section 4.4.2.

e. Rotorcraft Flight Manual (or Supplement).

THIS PAGE INTENTIONALLY LEFT BLANK

The following section is one template for use as a Rotorcraft Flight Manual Supplement (RFMS). Other formats may be acceptable.

1. GENERAL

2. LIMITATIONS

2.1 Operational Limitations:

(NOTE 8: The following limitation is required in the RFMS verbatim.)

"Installation of this NVIS system does not approve or imply approval for flight operation with Night Vision Goggles (NVG). The Operator must receive approval from their FAA Flight Standardization District Office to operate with NVGs."

2.2 Required Equipment in proper working order for NVG Operations:

1. Helmet with NVG mount for each pilot using NVGs.

2. Night Vision Goggles that meet TSO-C164 or the minimum operation performance standards established in RTCA DO-275 for crewmembers using NVG.

3. Radar altimeter.

4. Slip/Skid indicator.

5. Gyroscopic attitude indicator.

6. Gyroscopic Direction Indicator or equivalent.

7. Vertical Speed Indicator or equivalent.

8. Communications and navigation equipment necessary for the successful completion of an inadvertent IMC procedure in the intended area of operations.

9. Any other aircraft or personal equipment required for the operation i.e., curtains, extra batteries for NVGs, etc.

(NOTE 9: Some aircraft external lights cause distracting glare and reflections through the chin-bubble. If this is the case and chin-bubble mats are shown to be effective, consider adding the following note and the following caution:

"Chin bubble mats, if appropriate."

CAUTION:
If chin bubble mats are used to block glare from external aircraft lights, ensure that they are positioned and secured properly, provide sufficient view out of the chin bubble and do not block operation of tail rotor pedals.

2.3. Minimum Crew:

2.3.1. Additional crewmember use of NVGs during single-pilot operations into and out of unimproved sites:

2.3.1.1. Landing: An additional crewmember shall be equipped with and use NVGs during landing to assist in obstacle identification and clearing.

2.3.1.2. Takeoff: An additional crewmember shall use NVGs during takeoff from unimproved sites to assist in obstacle identification and clearance if operational conditions permit (i.e., patient status, etc.) allows.

2.3.1.3. Enroute: An additional crewmember using NVGs is not required when the aircraft is above 300 feet AGL and in cruise flight.

2.4 Incompatible NVIS lights

Identify cockpit equipment and lighting particular to the installation that is, by design, not NVIS compatible and that should remain off during NVG operations (e.g., passenger cabin lighting, non-mission essential radios, etc.).

3. EMERGENCY AND MALFUNCTION PROCEDURES

3.1 NVG Malfunction or Failure

Transition from aided to unaided flight as required.

3.2 NVIS Lighting Malfunction or Failure in Flight.

Discontinue NVG use if the malfunction or failure degrades NVIS compatibility.

3.3 Aircraft Emergencies

Maintain aircraft control and then initiate RFM procedures. The pilot's decision to continue use of NVGs should be based on the emergency situation.

4. NORMAL PROCEDURES

4.1. Operational Procedures

4.1.1. Preflight.

•Check Windshield, windows, and chin bubble windows for suitability (scratches, grazing, cleanliness, etc.).

•Check NVIS lighting for light leakage and compatibility.

•NVG adjustment and alignment.

•Check function of additional NVIS equipment.

•Interior Configuration check for NVIS equipment (e.g., deselect incompatible light sources).

•Exterior Configuration check for NVIS equipment (e.g., ensure exterior lights are NVIS if they were modified by the NVIS STC).

•Adjust lighting as desired.

4.1.2. In-flight.

•Adjust lighting as desired.

•Transition to aided from unaided operations (and vice versa) as necessary.

•Additional equipment procedures, as necessary

4.1.3. Post Flight. Report Discrepancies (NVG, NVIS lighting and equipment, and windshield) and record discrepancies for maintenance action and follow-up.

4.1.4. Special Procedures. Describe any unique procedures for each phase of flight if required.

5. Weight and Balance. The basic weight and balance should include the installation of NVIS equipment.

Additional Information in RFM(s). It is recommended that a sufficiently detailed system description be provided.

(This ends the section of one template for use as an RFMS.)

THIS PAGE INTENTIONALLY LEFT BLANK

f. Instructions for Continued Airworthiness

(1) General: The Instructions for Continued Airworthiness (ICA) should contain the information necessary for carrying out ongoing maintenance and inspections on NVIS equipment installed in the rotorcraft. Refer to Paragraph AC 27.1529, AC 27 Appendix A, and RTCA DO-275, Section 5.0, for detailed instructions and procedures. As a minimum, the following should be included:

(i) Appliance, System or Accessory Maintenance Manual, or Section.

(ii) Maintenance Instructions and Inspection Requirements.

(iii) Airworthiness Limitations.

(iv) Illustrated Parts Breakdown.

The ICA's should cover (as a minimum) aircraft transparencies (windscreen, windows, etc), NVIS lighting, NVG, and any additional aircraft equipment that support NVIS operations.

NOTE 8: We recommend the operator have a storage location or compartment on the aircraft to protect the continued airworthiness of the NVGs. However, you are prohibited from storing the NVGs in a location that could cause damage to the aircraft or aircraft component, hinder crashworthiness, or result in loss of the intended function of a component.

(2) Modifications

(i) Post-TC or STC Approved Modifications.

Any subsequent aircraft modifications (internal or external), including operational equipment (FLIR, emergency medical service (EMS) equipment, etc.) involving a light emitting or reflecting device should be re-assessed against the original requirements for the NVIS certification.

(ii) Multiple Type Certificate (TC) or Supplemental Type Certificate (STC) Approvals.

If the approval is granted for multiple aircraft, installation and production procedures should be provided to ensure all aircraft comply with the type design. This information should be provided in the initial certification data package, so that the FAA knows it is intended for multiple approvals. The production procedures should be sufficiently detailed to detect minor differences between the different aircraft. It is expected that post-production tests will include the ground and flight tests described above for each aircraft.

(iii) Supplementary Type Certificate verbiage: The following STC verbiage was developed to help with f(2)(i) and f(2)(ii) above:

"Any deviation from the cockpit or cabin configuration specified in this STC Type Design may affect the compatibility of the Night Vision Imagining System (NVIS) and may require a re-evaluation for NVG compatibility. Once the aircraft is modified with this STC any future modifications to the aircraft may also affect the compatibility of the NVIS and may require a re-evaluation for NVG compatibility.

g. NVG to NVG Helmet Interface. This paragraph provides guidance on NVG to helmet mounts. TSO-C164 establishes the certification standards for NVGs used for civil operations. The NVG to Helmet interface should meet the standards found in RTCA DO-275, section 2.4.4.1. through 2.4.4.3, which are summarized below

(1) Mount. The NVG assembly should be used with a helmet designed for NVG use. The mount should have a quick detach mechanism. The NVG assembly or mount and NVG assembly that allows the pilot to detach the NVGs from the helmet or head mount quickly using only one hand. The mounting system should permit one-handed (either hand with equal facility) operation of adjustments. The NVG battery pack is often attached to the back of the helmet acting as a counterweight. The attachment should be secure and strong enough to keep the battery pack in place but meet any breakaway requirements. If the NVG system does not have an external battery pack used as counterweight, the counterweight should be securely attached and meet any breakaway requirements.

If you are considering using a NVG headstrap, check to ensure it provides the stability and comfort required for extended wear. Additionally, the NVG mount should meet the characteristics discussed in the previous and following paragraph.

(2) Mount and NVG Interface. All mount and NVG interfaces should operate without damage or degradation of performance. If the NVG assembly has both a stowed position (away from operator's forward field of vision) and an operating position, then the NVG assembly should lock in place for each position. If the NVG assembly has a stowed position, then the image intensifier tubes should not be powered when the NVG assembly is in the stowed position, unless it otherwise can be demonstrated that normal performance can be maintained. In addition, when the NVG assembly is restored to its operating position from the stowed position, then the NVG assembly should maintain its original positional adjustments prior to stowage.

(3) Automatic Breakaway. Unless safe loads during a crash is demonstrated, an automatic breakaway system should be incorporated as part of the mount. Automatic breakaway should not occur during normal flight maneuvers. See RTCA/DO-275, section 2.4.4. for more information.

You can find an NVIS Evaluation Check List at
http://www.faa.gov/aircraft/air_cert/design_approvals/rotorcraft/nvis

CHAPTER 3
AIRWORTHINESS STANDARDS
NORMAL CATEGORY ROTORCRAFT

MISCELLANEOUS GUIDANCE (MG)

AC 27 MG 17. (reserved for future use)

CHAPTER 3
AIRWORTHINESS STANDARDS
TRANSPORT CATEGORY ROTORCRAFT

MISCELLANEOUS GUIDANCE (MG)

AC 27 MG 18 HELICOPTER TERRAIN AWARENESS AND WARNING SYSTEM (HTAWS)

[See new change to AC 27 MG 18 (dated 2/27/2014) posted as a separate document in RGL with this Master AC.]

~~a. Background~~

~~(1) General. Approximately 60% of helicopter accidents in recent years have been attributed to Helicopter Controlled Flight Into Terrain (CFIT) incidents, resulting in hull loss and fatalities. The original Ground Proximity Warning System (GPWS) was first introduced on helicopters in 1997. The GPWS is a computer-based system that provides the flight crew with alert (both aural and visual) of pending collision of the aircraft with the terrain, considering such items as crew recognition and reaction times.~~

~~(2) The helicopter GPWS has since been upgraded to "HTAWS" that incorporates a terrain and obstacle database with GPS vertical and horizontal position to provide enhanced terrain and obstacle awareness. The enhanced awareness is achieved by employing a look-ahead function that provides cautions, warnings, and terrain and obstacle display(s).~~

~~(3) TSO-C151b. Technical Standard Order (TSO)-C151b, Terrain Awareness and Warning System, prescribes the minimum performance standards that a Terrain Awareness and Warning System (TAWS) must meet to be identified with the TSO-C151b Class A or Class B marking. The requirements contained in TSO-151b were developed for airplanes and many of the operational modes are not appropriate for helicopter installation. The recommended changes to the TSO requirements for a system to be installed in a helicopter are presented in paragraph s of this guidance. These additional performance considerations should be complied with for helicopter installations.~~

~~*Note: The issuance of a Technical Standard Order Authorization (TSOA) against TSO/JTSO- C151b (or further amendments) does not constitute an installation approval.*~~

~~b. Purpose. This guidance material describes an acceptable means for obtaining FAA/AUTHORITY airworthiness approval for the installation of a Helicopter Terrain Awareness and Warning System (HTAWS). This information provides guidance for the design and installation for an HTAWS for helicopters. The guidance provided is specific to installations of these systems on helicopters certificated under FAR/JAR 27. It describes the airworthiness considerations for such installations as they apply to the unique features of the HTAWS and the interface of the HTAWS with other systems on the helicopter. The HTAWS certification should address the complete process, from source and integrity of the database to the required sensors and their effect on operational credit for the installation. There are five basic aspects for certification for~~

~~HTAWS that are discussed throughout this document: equipment qualification, installation, credit validation, testing considerations, and Instructions for Continued Airworthiness (ICA).~~

~~c. Related Regulations and Documents~~

~~(1) Regulations. FAR/JAR:~~

~~§ 27.1301 Function and installation~~
~~§ 27.1303 Flight and navigation instruments~~
~~§ 27.1309 Equipment, systems, and installations~~
~~§ 27.1321 Arrangement and visibility~~
~~§ 27.1322 Warning, caution, and advisory lights~~
~~§ 27.1351 Electrical systems and equipment—General~~
~~§ 27.1357 Circuit protective devices~~
~~§ 27.1381 Instrument lights~~
~~§ 27.1459 Flight recorders~~
~~§ 27.1529 Instructions for Continued Airworthiness~~
~~§ 27.1541 Markings and placards—General~~
~~§ 27.1581 Flight manual—General~~
~~§ 27.1585 Operating procedures~~

~~(2) Advisory Circulars (AC), Orders, and Technical Standard Orders TSO/JTSO~~
~~TSO-C92c, Ground Proximity Warning/Glide slope Deviation Alerting Equipment: Technical Standards Authorization, Part 37.201~~
~~TSO-C 151b, Terrain Awareness and Warning System~~

~~(3) Industry documents. The Radio Technical Commission for Aeronautics (RTCA) documents listed below are available from RTCA, Inc., 1140 Connecticut Avenue N.W., Suite 1020, Washington, D.C. 20036-4001; DO-160D, Environmental Conditions and Test Procedures for Airborne Equipment.~~

~~DO-161A, Minimum Performance Standards - Airborne Ground Proximity Warning Equipment.~~

~~DO-200A, Standards for Processing Aeronautical Data.~~

~~Society of Automotive Engineers (SAE) Aerospace Recommended Practice (ARP) 4754, Certification Considerations for Highly Integrated or Complex Aircraft Systems.~~

~~d. Definitions~~

~~(1) Alerts: A visual or aural stimulus presented either to attract attention or to convey information regarding system status or condition, or both.~~

~~**HTAWS Alerts:**~~

~~**Aural Alert:** A discrete sound, tone, or verbal statement used to annunciate a condition, situation, or event.~~

~~**Visual Alert:** The use of projected or displayed information to present a condition, situation, or event to the flight crew.~~

~~**Caution Alert:** An alert requiring flight crew awareness. Subsequent corrective action will normally be necessary.~~

~~**Warning Alert:** An alert for a detected terrain or obstacle threat that requires immediate flight crew attention and decision.~~

~~(2) Class (A) HTAWS Equipment: This class of equipment provides Ground Proximity Warning System (GPWS), Forward Looking Terrain Avoidance (FLTA), and a display capability, as defined in paragraphs **e** and **j**.~~

~~(3) Class (B) HTAWS Equipment: This class of equipment provides FLTA, as defined in paragraph **e** and **j**.~~

~~(4) Controlled Flight Into Terrain (CFIT): An accident or incident in which the aircraft, under the flight crew's control, is inadvertently flown into terrain, obstacles, or water.~~

~~(5) Failure: The inability of the equipment or any subpart of that equipment to perform its intended function within previously specified limits.~~

~~(6) False Alert: A warning or caution that occurs when the design terrain or obstacle warning or caution threshold of the system is not exceeded.~~

~~(7) Forward-Looking Terrain Avoidance (FLTA): An HTAWS functional requirement to provide look-ahead terrain and obstacle protection along and below the aircraft's lateral and vertical flight path.~~

~~(8) Hazard: A state or set of conditions that, together with other conditions in the environment, could result in an adverse safety impact.~~

~~(9) Hazardously Misleading Information (HMI): An incorrect depiction of the terrain or obstacle threat relative to the aircraft during an alert condition (excluding source data).~~

~~(10) Integrity: Attribute or reliability of a system or a component that can be relied upon to function as required by the criticality determined by the Functional Hazard Assessment (FHA).~~

~~(11) Low Altitude Mode: A reduced warning algorithm state that allows operation at less than en route altitudes with minimal alerts.~~

~~(12) Maneuver: An appropriate change in the flight path of the aircraft initiated by the flight crew in response to an HTAWS alert to include climbs, descents (inappropriate for most situations), and turning procedures.~~

~~(13) Nuisance Alert: An alert that occurs when there is no threat or is unnecessary for the intended operation.~~

~~(14) Obstacle: A human-made structure that is in the flight path of the aircraft.~~

~~(15) Operational Credit: To give approval for an HTAWS installation that adds to, replaces, or intervenes in the aircraft's operating requirements or operational procedures based on the installation and operation of the HTAWS system.~~

~~(16) QFE: Corrected Barometric Altitude relative to field elevation.~~

~~(17) QNH: Corrected Barometric Altitude relative to sea level.~~

~~(18) Required Terrain Clearance (RTC): The minimum requirements for obstacle or terrain clearance as defined by United States Standard for Terminal Instrument Procedures (TERPS) FAA Order 8260.3B and the Aeronautical Information Manual (AIM).~~

~~(19) Helicopter Terrain Awareness and Warning System (HTAWS): A generic term used to describe an alerting system that provides the flight crew with sufficient information and time to detect potentially hazardous terrain or obstacle.~~

~~(20) Terrain Awareness Display (TAD): A display of the surrounding terrain and obstacle(s) relative to the aircraft.~~

~~(21) Terrain Database: Terrain and obstacle information stored within an HTAWS.~~

~~(22) Time-shared Display: A display that shows terrain and obstacle information, plus additional information from other systems [e.g., an Electric Flight Instrument System/Navigation Display/Multi-Function Display (EFIS/ND/MFD)].~~

~~e. SYSTEM DESCRIPTION~~

~~HTAWS is intended to provide flight crews with aural and visual alert aids aimed at preventing a CFIT accident by providing increased terrain and obstacle awareness. Like airplane TAWS, as described in TSO-151b, HTAWS equipment may be divided into two classes of complexity which, in general, may relate to aircraft size or complexity.~~

~~(1) Class (A) HTAWS equipment.~~

~~(i) Class (A) HTAWS equipment provides two principal alerting functions. These are:~~

~~(A) Forward-Looking Terrain-Avoidance (FLTA) function, which includes:~~

- ~~Reduced required terrain clearance.~~
- ~~Imminent terrain or obstacle impact.~~

~~(B) Basic Ground Proximity Warning System (GPWS) functions, which includes:~~

- ~~Excessive rates of descent. (Optional)~~
- ~~Excessive closure rate to terrain.~~
- ~~Excessive altitude loss after takeoff.~~
- ~~Flight into terrain when not in landing configuration.~~
- ~~Excessive downward deviation from ILS glidepath.~~

~~(ii) Although the installation of a HTAWS is not currently required by operational rules for helicopters, to be consistent with TSO151b requirements the Class (A) HTAWS should include a display that meets the requirements of paragraph j. The terrain and obstacle display and threat alerting are made possible by the HTAWS' acceptance of a variety of input parameters. These parameters are used in conjunction with a terrain, obstacle and airport database(s) that reside within the HTAWS computer. The Class (A) HTAWS places an aircraft position symbol on a terrain and obstacle map and applies terrain display algorithms. Terrain and obstacle mapping information may be provided on either a weather radar (WX) display, Electronic Flight Instrument System (EFIS) display, or other compatible display screens. The display of HTAWS information on an MFD that also serves other purposes should be displayed in a heading up or track up orientation, not in a North up orientation to avoid confusion. See paragraph l for prioritization of alerts.~~

~~(iii) Aircraft position information should be provided by a Global Positioning System (GPS or GPS-based equivalent) that meets the provisions specified in paragraph **h** (Position Source).~~

~~(iv) Class (A) HTAWS equipment may provide automatic autorotation detection when Excessive Descent Rate warning functions are included. A detected autorotation state should inhibit Excessive Rate Warnings and other warnings that may~~

~~distract a flight crew during an emergency procedure. Altitude advisories and gear (not extended) warning may be added during this autorotation state if desired. The altitude for the optional gear warning should be based on the specific helicopter autorotation rate of descent and gear extension time to insure gear down prior to the landing.~~

~~(v) Class (A) HTAWS equipment should provide a Low Altitude Mode to allow VFR operations at less than en route altitudes with minimal nuisance alerts.~~

~~(2) Class (B) HTAWS equipment.~~

~~(i) Class (B) HTAWS equipment provides two principal alerting functions. These are:~~

- ~~Imminent terrain or obstacle impact~~
- ~~Excessive altitude loss after takeoff~~

~~(ii) Class (B) HTAWS does not require a display. If a display is installed with a Class (B) HTAWS, it should meet the provisions of paragraph **j** (Display Presentation).~~

~~(iii) Class (B) HTAWS equipment is required to interface with an approved GPS (or GPS-based equivalent) for horizontal position information that meets the provisions specified in paragraph **h** (Position Source).~~

~~(iv) Class (B) HTAWS does not require an interface to a radar altimeter.~~

~~(v) Class (B) HTAWS equipment should provide a Low Altitude Mode to allow VFR operations at less than en route altitudes with minimal alerts.~~

~~f. Airworthiness Considerations~~

~~(1) The scope of the applicant's program should be directed toward airworthiness approval through the Type Certification (TC), Amended Type Certification (ATC), or Supplemental Type Certification (STC) processes. The significant differences between the airplane (TAWS) and helicopter (HTAWS) systems and the lack of specific TSO requirements for the helicopter system necessitate greater engineering and flight test involvement than normally provided during the field approval process. The applicant must identify if the changes made to the helicopter during installation of the HTAWS constitute a significant (engineering) change. However, the installation of the HTAWS alone should not require application of the Changed Product Rule, § 21.101.~~

~~(2) The remainder of this document describes in detail specific airworthiness considerations that applicants should consider as part of the certification process.~~

~~g. Certification Requirements:~~

~~(1) General. For first time approvals, the manufacturer or applicant should provide detailed systems description and design features that can be verified by certification engineers and project pilots. Flight-testing should concentrate on the adequacy of the interface, basic functionality of the system, location and visibility of the display, adequacy of the visual and aural alerts, day and night lighting, ease of use, understanding of the terrain and obstacle display, and potential interference with other installed equipment. In general, each mode of operation of the system should be evaluated in flight.~~

~~(2) System Safety Assessment. The applicant should perform a Functional Hazard Assessment (FHA) and System Safety Assessment (SSA) to establish the HTAWS criticality and hazards associated with the proposed installation. The reliability level of the system must be commensurate with the assessed criticality, and compliance with this criticality level must be demonstrated during certification. These assessments should consider the probability of such failures as: unannunciated failures, false caution or warning alerts due to undetected (or latent) failures, failure of the system to provide the required alerting functions due to undetected (or latent) failures, effects of HTAWS failures on other aircraft systems, nuisance alerts, etc.~~

~~(3) Software Qualification. The software for the HTAWS should be developed in accordance with RTCA DO-178B, Software Considerations in Airborne Systems and Equipment Certification, or an FAA/AUTHORITY-accepted equivalent. The most significant aspects of the enhanced features are the terrain and obstacle database stored in the HTAWS computer and the algorithms used by the HTAWS computer. Coupled with this are the evasive maneuvers that will be employed to avoid terrain and obstacle. Regardless of the findings of the above System Safety Assessment, software for the HTAWS should be developed as a minimum to DO-178B level C. The software level will be commensurate with the failure condition category determined during the safety assessment process. This analysis should include unannunciated failure or malfunction (false warning) of the HTAWS aural or visual warnings.~~

~~(4) Environmental Qualification. Since the TSO is not an installation approval, the HTAWS installation should be shown to be suitable to its airborne environment. A desirable way to qualify the system component is to obtain approval to the appropriate TSO; however, if the TSO environmental considerations do not adequately represent the actual installation environment, the differences must be considered and evaluated. If the equipment is not TSO-approved, it should be shown through testing that it complies with the requirements of SAE Document AS-8034, for the display and latest revision of RTCA Document DO-160, and other appropriate standards at the time of qualification of the equipment. This will include testing in accordance with the appropriate categories of the latest revision of RTCA Document DO-160, JEDEC Publication No. 64D (Protection from Ionizing Radiation).~~

~~(5) System Performance Validation. The applicant should demonstrate that the performance of the HTAWS, with regards to the position of the aircraft relative to the~~

~~terrain or obstacle, is adequate to preclude creation of a hazardously misleading situation. The integrity of the navigation source has a significant effect on acceptable performance of the system. The applicant should demonstrate that the performance of the HTAWS navigation source is suitable for each phase of flight (en route, terminal, approach, and low altitude mode) for which approval is sought. The HTAWS navigation source may be the same as the primary navigation system for the aircraft.~~

~~(6) Database Considerations. Since 6 arc-second terrain data currently are not available for all regions of the world, it may be years before a complete database is developed. It may be impossible to perform 100 percent verification of the accuracy of the terrain database. There currently are no specific FAA/AUTHORITY certification standards for airborne terrain and obstacle databases; therefore, the completeness and integrity of those available databases may vary significantly. To ensure no erroneous data could result in misleading information, the HTAWS system operating software should be developed in accordance with RTCA DO-178B, or an FAA/AUTHORITY accepted equivalent. The applicant should present and verify the process by which the database is developed and the methodology used to validate the database. The applicant should demonstrate that the accuracy and resolution of the database is suitable for the intended operation. The DO-200A, Standard for Processing Aeronautical Data or equivalent must be used as a guideline.~~

~~(7) Alerts. Alerts should be clear, concise, and unambiguous. If there is a failure mode where the display may be inoperative but the HTAWS is operative or vice versa, some type of annunciation of the failure mode should be provided to the flight crew; e.g. "HTAWS display inop", "HTAWS inop", etc. This annunciation should be clear, unambiguous, and distinguishable from other failures. The alerting system should be consistent with the basic alerting philosophy of the GPWS.~~

~~(8) Displays. The current state of the art of HTAWS may make use of existing aircraft display systems such as the weather radar, or Multiple Function Display (MFD); therefore, implementation of the HTAWS presentation requires the integration with existing display systems. The use of the HTAWS display must not unacceptably detract from the usability of existing functions. Refer to paragraph **j** for Display Presentation Considerations.~~

~~h. Position Source. HTAWS uses the estimated position, based on GPS, of the aircraft with reference to the terrain or obstacle to determine when an alert should be annunciated. The applicant should provide evidence that the HTAWS position source (horizontal and vertical) is suitable for each phase of flight (i.e., en route, terminal, low alt mode, and approach, for which approval is sought).~~

~~(1) Horizontal and Vertical Position Source.~~

~~(i) HTAWS that interface with previously approved navigation systems:~~

~~(A) Class (A) equipment may use approved Area Navigation (RNAV), which should include GPS which complies with **(D)** below.~~

~~(B) Class (B) equipment is required to interface with an approved GPS for horizontal and vertical position, which complies with **(D)** below.~~

~~(C) Previously approved RNAV and GPS systems that are used for navigation are considered suitable for HTAWS horizontal and vertical position inputs, if they comply with **(D)** below.~~

~~(D) GPS equipment must meet the requirements of TSO-C129a and provide 95% horizontal and vertical position accuracy figure of merit (FOM or DOP) estimates, in accordance with ARINC-743A.~~

~~(E) If a Wide Area Augmentation System (WAAS) is used as a position source, it should meet TSO C-145a and comply with the FOM requirements of **(D)** above.~~

~~(F) HTAWS functions that require a navigation source for operations should be automatically disabled when the source has degraded to a point where its accuracy can no longer support the HTAWS functions. An aural and visual annunciation of this loss of function is required except for specific failures where a visual annunciation has been demonstrated to be acceptable.~~

~~(ii) HTAWS equipment with internal GPS position source: Class (A) and Class (B) equipment that uses a GPS internal to the HTAWS for horizontal and vertical position information, must use a GPS that complies with **(i)(D)** above.~~

~~(iii) The HTAWS should be capable of detecting a positional error that exceeds 0.25 NM, which is considered unsuitable for the HTAWS, and the functions that require GPS for operations should be automatically disabled and an aural and visual annunciation provided. An exception to this requirement will be made for specific failures where visual annunciations have been demonstrated to be acceptable. The applicant should be able to demonstrate that the HTAWS, as installed on the helicopter, provides the required position information accuracy (latitude/longitude and altitude) for the HTAWS functions.~~

~~(2) Vertical Position Aiding. The following sources are considered suitable for use in aiding vertical position. They may be used in combination, if the appropriate accuracy is demonstrated. The applicant should be able to demonstrate that the HTAWS, as installed on the aircraft, provides the appropriate vertical information for the HTAWS functions. Where operations are reliant on the use of QFE, an adequate means of determining the altitude should be provided. Geometric altitude should be enabled if the system has the capability.~~

~~(i) Barometric Altitude. Vertical position information provided by a barometric altitude source that meets the requirements of TSO-C10b, or later versions, is considered acceptable as a source of vertical position information.~~

~~(ii) Radar Altimeter. Vertical position information provided by a radar altimeter that meets the accuracy specified in TSO-C67 or later version, is considered acceptable as a source of vertical position information. Class (B) equipment does not require a radar altitude input.~~

~~(iii) Air Data Computers. Vertical position information provided by an air data computer is considered acceptable as a source of vertical position information if it meets the accuracy requirements of TSO-C106, or later versions.~~

~~(iv) GPS. Vertical position information provided by GPS may be used in combination with other sources of vertical position. If GPS is used as the only means for the determination of vertical position, then it must meet the requirements of TSO-C145, C129a, C115b, C146a, or later versions and paragraph **(1)(i)(D)** above.~~

~~(v) IRS. Vertical position information provided by an Inertial Reference System (IRS) may be used in combination with other sources of vertical position. If an IRS is used as the only means for the determination of vertical position, then it must meet the requirements of TSO-C115b, or later versions and **(1)(i)(D)** above.~~

~~i. Terrain Database. The terrain database for HTAWS should be validated via the TSO-C151b authorization process, or similar process. If the TSO or equivalent process is not used to validate the database, the installer should demonstrate that the integrity is acceptable for the installation. There are three additional areas of concern that should be addressed during the installation process:~~

~~(1) Updates. The installed system should be capable of accepting updated terrain database and obstacle database (if applicable). The HTAWS manufacturers must have a procedure in place whereby the manufacturer can inform the aircraft owner or operator about database updates. The procedure should contain sufficient information to enable the owner or operator to make a logical safety decision as to whether it is appropriate to purchase and install the update. A means should be provided for identifying the local terrain and obstacle resolution for inclusion in the Pilot's Guide and Flight Manual (or Supplement).~~

~~(2) Valid Regional Data. The Pilot's Guide and Flight Manual (or Supplement) should identify the procedures for determining the status of the terrain and obstacle database. Operators should use this information to determine if updates include significant changes to the terrain and obstacle databases for the area of intended operation.~~

~~j. Display Presentation. For Class (A) HTAWS installed without an operational requirement, the terrain and obstacle display is optional; however, the flight crew's~~

~~ability to identify potential vertical and horizontal flight path conflicts and correct these conflicts before an alert occurs is greatly enhanced by displaying this information. Additionally, a visual display of the hazard will help support the appropriate recovery when an alert occurs. Therefore, it is recommended with any HTAWS installation that a means of displaying Terrain information be included when ever practical.~~

~~(1) Terrain and Obstacle Display.~~

~~(i) When a display is installed, the HTAWS equipment must be capable of providing terrain and obstacle alerting data to a cockpit display. The display hardware may be stand alone or interfaced with existing equipment, such as a weather radar (WXR), navigation displays, or other compatible display systems. The actual display presentation format will depend on the onboard display hardware, the options made available by the HTAWS manufacturer, and the features desired by the customer or user. Regardless of what format is used, the display presentation should enhance the flight crew's awareness of terrain and obstacle hazards.~~

~~(ii) The terrain and obstacle display system is an output from the HTAWS; therefore, the possibility of misleading information on the display due to undetected or latent failures should be commensurate with the failure condition category.~~

~~(iii) During the development of the HTAWS display, the applicant should use a representative sample of pilots to participate in the design and evaluation process for the proposed presentation format if a novel presentation is considered.~~

~~(iv) The applicant may consider selecting a display where multiple functions are presented. In these cases, a means to select or de-select the display of terrain and obstacle information should be provided. However, care should be exercised in selecting such a multifunction implementation, to ensure that the display sharing is appropriate for the specific functions. The use of the HTAWS display should not unacceptably detract from the usability of existing functions. Since the HTAWS display is not to be used for navigation, the use of the display should not impair the ability of the pilot to perform required navigation functions. An example of such an impairment would be an installation that forces the pilot to choose between the HTAWS display and the needed navigation information in situations where both could be effectively used simultaneously and continuously (e.g., instrument approach in the vicinity of hazardous terrain and obstacles). If the timesharing of the display between HTAWS and other functions is deemed acceptable, the design should facilitate simple switching between the functions, with minimal time delays, so both functions are sufficiently accessible in realistic flight scenarios.~~

~~(v) The terrain and obstacle display should be installed in a location that provides monitoring by the pilot(s) for identification of potential flight path conflicts. In general, the terrain and obstacle display should be in a location similar to other multifunction displays, such as electronic maps and weather radar.~~

~~(2) Terrain and Obstacle Display Presentation. HTAWS equipment should be designed to interface with a color terrain and obstacle display. If there are multiple terrain and obstacle views available, at least one terrain and obstacle display should be capable of providing all of the following terrain-related information:~~

~~(i) The terrain and obstacle should be depicted relative to the aircraft's position so that the pilot may estimate the relative bearing to the terrain and obstacle of interest.~~

~~(ii) The terrain and obstacle depicted should be oriented to either the heading or track of the aircraft. Since track information may be confusing during hover and low speed flight (other than forward), heading is the appropriate orientation for these flight regimes. Additionally, a north-up orientation may be included as a selectable format but should be limited to pre-flight planning.~~

~~(iii) Variations in terrain and obstacle elevation depicted relative to the aircraft's elevation (above and below) should be visually distinct. Terrain or an obstacle that is more than 1,500 feet below the aircraft's elevation need not be depicted.~~

~~(iv) Terrain or obstacles that generate alerts should be displayed in a manner to distinguish it from non-hazardous terrain or obstacles, and be consistent with the caution and warning alert level.~~

~~(v) The terrain and obstacle display presentation should be clear, unambiguous, and readily usable by the flight crew during day and night operations, under all ambient lighting conditions expected in service.~~

~~(vi) The terrain and obstacle display should be viewable in direct sunlight.~~

~~(vii) An inhibited, failed, or inoperative HTAWS should be indicated to the flight crew in a manner consistent with the flight deck design philosophy.~~

~~(viii) The terrain and obstacle display presentation should complement and be compatible with the terrain alerting function of the HTAWS.~~

~~(ix) Terrain and obstacle mapping should allow the flight crew to determine relative terrain elevation.~~

~~(x) The terrain and obstacle display should be designed so the flight crew can readily determine if the terrain or an obstacle is a threat to the aircraft.~~

~~(xi) The colors and textures used for threat terrain and obstacle should be consistent with other FAA and RTCA guidance (such as DO-257) as well as intuitive and indicative of the immediacy of the threat.~~

~~(xii) If the terrain or obstacle data is presented on a shared display, the terrain and obstacle mode and terrain and obstacle information should be easily distinguishable from weather and other features.~~

~~(xiii) For color displays, the selected colors should complement the discrete visual and aural alerts that are presented to the flight crew. Accordingly, any colors that are used for the threat terrain and obstacle display should match the colors used for discrete visual alerts.~~

~~(xiv) If additional terrain and obstacle views are provided, they should not present information that is inconsistent or incompatible with the features described above. Each view should be consistent with the other as far as color, scale, and textural information. When transitioning between views, the range scale should remain the same for each view. Each view will be carefully evaluated to ensure that it does not interfere with or reduce the effectiveness of the HTAWS. Since such displays may include functions that go beyond the scope of this guidance, they should be evaluated as appropriate.~~

~~(3) Pop-Up Mode Switching Functionality.~~

~~(i) An automatic pop-up feature should be incorporated. If the display does not provide a pop-up feature, a flight manual limitation should require the Terrain and Obstacle Display be selected when engaged in Low Altitude Mode operations.~~

~~(ii) General Considerations. If implemented, an automatic pop-up feature should incorporate the following considerations in its design:~~

~~(A) The pop-up functionality should automatically display HTAWS-related information when an HTAWS caution alert occurs.~~

~~(B) The terrain and obstacle display mode should be annunciated on the display. If this is not feasible, a mode annunciation light should be installed near the terrain and obstacle display.~~

~~(C) The pop-up functionality should be implemented consistently for weather, predictive wind shear, and traffic alerts, including any overlay design philosophies. The pop-up must not impair the pilot's use of essential flight or navigational information.~~

~~(D) The display should be designed so that it is very evident that an automatic pop-up has occurred.~~

~~(E) Manually switching back to the original mode of operation should require minimal effort.~~

~~(F) Automatic switching back to the original mode of operation after the caution or warning ceases should not be allowed unless it is part of the aircraft design philosophy.~~

~~(iii) Pop-Up Inhibit Feature. For dual displays, pop-up functionality may be inhibited if the terrain and obstacle map is on at least one display when a terrain alert occurs. However, if the terrain and obstacle map is not on a display when a terrain alert occurs, the terrain and obstacle map, with the alerts, should be automatically displayed on at least one display.~~

~~(4) Auto-Range Switching Mode.~~

~~(i) An auto-ranging function during alerts should be provided. If provided, an auto-ranging display should be designed so that range is evident to the flight crew. The range selected for auto-ranging should provide a usable depiction of the threat on the display. Switching back to manually selected range should require minimal effort. If auto range is not provided, RFM or RFMS limitation should require the selection of a range of 3 miles or less when low altitude mode is selected.~~

~~(ii) For displays that do not support a range of 3 miles or less, an evaluation of adequacy for operation in Low Altitude Mode should be performed.~~

~~k. Alerts.~~

~~(1) In addition to meeting the color requirements of § 27.1322, as applicable, the HTAWS alerts should be clear, concise, and unambiguous.~~

~~(2) The certification plan should include tests and analyses to assure that the visual and aural alerts are consistent with the alerting philosophy of the aircraft flight deck in which the HTAWS equipment is installed. This is particularly important with retrofit installations, which may use previously-installed alerting annunciations. The plan should consider that the visual alerts are:~~

- ~~Located in the pilots field of view,~~
- ~~Consistent with their associated voice, or aural call out, and~~
- ~~Consistent with the colors specified in § 27.1322 and TSO-C-113, both in the discrete and textual display formats.~~

~~l. Alert Prioritization.~~

~~(1) Installations of HTAWS on aircraft also equipped with Traffic Collision Avoidance System (TCAS) should include an alert prioritization scheme such that:~~

~~(i) Only one alert is given at any one time, and~~

(ii) Alerts for situations requiring immediate action by the flight crew have priority in ~~situations where conditions for multiple alerts may occur.~~

~~**NOTE**: In older aircraft, the system architecture may preclude the prioritization of alerts for multiple alerting systems. If that is the case, a prioritization scheme is not required. However, if simultaneous alerts can be given, then the aural words should be understandable and the associated visual alerts should not be confusing to the flight crew.~~

~~(2) Implementing this prioritization scheme within the HTAWS equipment is acceptable. Figure AC 27.MG 18-1, below, displays an example of the recommended alert prioritization.~~

~~(3) Installation of HTAWS on helicopters with central or integrated Master Aural Warning system should show compatibility to a master aural warning scheme that is consistent with the overall cockpit design.~~

~~Recommended Alert Prioritization between the HTAWS and TCAS TA~~

~~Priority~~		~~Description~~
~~Highest~~ ~~**Class (A)**~~		~~Pull-Up Warning *(Excessive Rates of Descent)*~~
~~**Class (A)**~~		~~Terrain Terrain *(Excessive Closure Rates)*~~
~~Class (A)~~		~~Terrain Closure Pull-Up Warning *(Excessive Closure Rates)*~~
~~**Class (A)/(B)**~~		~~Terrain Awareness Warning *(FLTA)*~~
~~**Class (A)**~~		~~Warning Obstacle *(Look ahead obstacle warning)*~~
~~**Class (A)**~~		~~Minimums *(Voice Callouts)*~~
~~**Class (A)/B**~~		~~Terrain Awareness Caution *(FLTA)*~~
~~**Class (A)/(B)**~~		~~Caution Obstacle (look ahead obstacle caution)~~
~~**Class (A)**~~		~~Too Low Terrain *(Flight Into Terrain When Not in Landing Configuration)*~~
~~**Class (A)**~~		~~Altitude Callouts *(Voice callouts)*~~
~~**Class (A)**~~		~~Too Low Gear *(Flight Into Terrain When Not in Landing Configuration)*~~
~~**Class (A)**~~		~~Sink Rate *(Excessive Rates of Descent)*~~
~~**Class (A)/(B)**~~		~~Don't Sink *(Excessive Altitude Loss After Take-off)*~~
~~**Class (A)**~~		~~Glide slope *(Excessive Downward Deviation From an ILS Glide slope)*~~
~~***Class (A)/B***~~		~~TCAS TA *("Traffic Traffic") (*)*~~
~~**Class (A)**~~		~~Bank Angle *(Voice Callouts)*~~
~~**Class (A)**~~		~~Tail Strike *(Voice Callouts)*~~
~~**Class (A)/(B)**~~		~~Terrain INOP Status *(Be Alert Terrain INOP)*~~
~~***Lowest***~~		~~TCAS TA *("Traffic Traffic") (*)*~~

~~*(*) TCAS TA Priority can be either priority 15 or 19.*~~
~~*(Note: The alert described above only accounts for HTAWS/TCAS aural priorities. Other aircraft system aural alerts may be present and the resulting prioritization would then need to be established on an installation basis.)*~~

~~FIGURE AC 27.MG 18-1~~

~~m. System Inhibit.~~

~~(1) A means for the flight crew to inhibit the following HTAWS functions should be provided:~~

~~FLTA and Basic GPWS audio for a period of time not to exceed 5 minutes or FLTA cautions and warnings. (momentary switch with 5-minute reset)~~
~~--OR--~~
~~FLTA Cautions and Warnings~~

~~Basic GPWS – Excessive downward deviation from the ILS glide slope~~

~~Basic GPWS for extreme low-level operation and FLTA. Note: This option should have specific coverage in the RFM/RFMS for its use and operational constraints.~~

~~(2) Appropriate annunciation of the inhibited functions should be provided to the flight crew. Flight crew procedures for disabling various HTAWS functions should be identified in the Flight Manual (or Supplement). For Class (A) equipment, inhibiting the FLTA functionality, if provided, should not affect the Basic GPWS functions.~~

~~n. Flight Data Recorder. For those applications that require crash-survivable flight data recording in accordance with the requirements of § 27.1459(e) (flight recorders), consideration should be given to provide a means to record the FLTA alerts. (It is not necessary to distinguish between Basic GPWS and the new FLTA alerts.) If this provision is implemented, a means also should be provided to record an FLTA inhibit.~~

~~o. Ground Test Considerations.~~

~~(1) A ground test should be conducted for each HTAWS installation. The level of testing required will be determined by the scope of the installation (First of a Model vs. Follow-on). Some items to consider for ground test should include:~~

~~Location of HTAWS controls, displays, and annunciators;~~

~~Evaluation of identified failure modes;~~

~~Evaluation of all HTAWS interfaces; and,~~

~~Electromagnetic interference (EMI)/electromagnetic compatibility (EMC) testing, and VHF harmonic tests for HTAWS with internal GPS receivers.~~

~~(2) Considerations should be made (to the maximum extent possible) for evaluating display characteristics and interface if it can be shown that all of the performance aspects of the display that are available during flight can be evaluated on the ground.~~

p. Flight Test Considerations.

(1) The level of flight test required to validate a particular HTAWS installation will be based on the aircraft system architecture, and credit given for previously certified installations, simulations, and ground tests. The requirement for a flight test needs to be evaluated for each installation. First time installations and new sensor inputs will require flight tests. STC follow-on installations that introduce changes in flight deck configurations may require flight tests if they cannot be evaluated as specified in paragraph **o** of this document. The evaluation of new sensor models or aircraft models may require flight tests, unless it can be shown through a sensitivity analysis that the new sensor's dynamic characteristics and the model aircraft during flight are compatible with the current sensor parameters, and will not effect the performance of the HTAWS. The following examples are intended to assist in determining the flight test guidelines for some potential or likely HTAWS configurations. Figure AC 27.MG 18-2, (which follows the five examples), provides a summary of these examples.

(i) Example 1. This is the first time the vendor's equipment has been installed in any aircraft for the purpose of receiving a first time FAA/AUTHORITY approval. A complete and thorough Ground and Flight Test program should be conducted to verify the adequacy of the installation. If the HTAWS has been approved on another helicopter model, the scope of the testing should be reduced to assure functionality of each mode, and proper interface with other aircraft systems and displays.

(ii) Example 2. This involves a follow-on installation of a previously approved HTAWS in which a required sensor input has not been previously approved for the specific vendor's equipment. For example, if the sensor that provides barometric altitude rate (or equivalent) to the HTAWS equipment has not been previously approved, the flight test evaluation should focus on the HTAWS functions affected by barometric altitude rate such as excessive rates of descent.

(iii) Example 3. This involves a follow-on installation of a previously approved HTAWS in which the Terrain and Obstacle Display has not been previously approved. In this case, the focus of the flight test evaluation should be on display related issues and tests specified in paragraph **t**(4) (Terrain and Obstacle Display Flight Test Considerations) of this AC.

(iv) Example 4. This involves a follow-on installation of a previously approved HTAWS in which the horizontal and vertical position source sensor input has not been previously approved for the specific vendor's equipment. The focus of the flight test evaluation should be on the adequacy of the horizontal position source and the terrain and obstacle display as determined by that horizontal position source. In addition, since the navigation system provides track and ground speed information to HTAWS, which affect the alerting logic, an FLTA functional flight test evaluation test is warranted. Some basic GPWS installations use the horizontal position information to

~~desensitize some of the basic GPWS modes. Verification of the function and proper interface installation may require additional flight-testing for the basic GPWS.~~

~~(v) Example 5. This involves a follow-on installation of a previously approved HTAWS in which the radar altimeter to the HTAWS equipment has not been previously approved. In this case, the focus of the flight test evaluation should be on the HTAWS functions affected by radar altitude such as one of the Basic GPWS. Only one mode test is required to assure that the radar altimeter input is properly installed to the HTAWS. This example does not apply to Class (B) HTAWS.~~

~~(vi) Example 6. This involves an initial installation of a vendor's HTAWS in a model aircraft that was previously approved with Basic GPWS equipment from the same vendor. Same basic GPWS algorithms, and the same sensors that are used for the GPWS installation are used for the HTAWS installation. Generally, the Basic GPWS testing is not required to be accomplished for the HTAWS installation. However, there are exceptions such as the following:~~

~~**Exception**: A basic GPWS is installed in an aircraft; subsequently, the HTAWS is to be installed. The sensors used for the basic GPWS and those used for the HTAWS are the same, except that some of the algorithms were changed and some features were added. Ultimately, an evaluation should be made to check the differences between the basic GPWS algorithms that were certified and the basic GPWS algorithms used for the HTAWS to determine if any flight-testing is necessary.~~

~~***Flight Test Matrix***~~
~~WS~~

~~HTAWS TEST Examples~~	~~FLTA~~	~~Basic GPWS*~~	~~Terrain Display~~	~~Horizontal & Vertical Position Source~~
~~Example 1~~	~~X~~	~~X~~	~~X~~	~~X~~
~~Example 2~~		~~X~~		
~~Example 3~~			~~X~~	
~~Example 4~~	~~X~~	~~If desensitized~~	~~X~~	~~X~~
~~Example 5~~		~~X~~		
~~Example 6~~	~~X~~		~~X~~	~~X~~

~~** Class (A) equipment only*~~

~~FIGURE AC 27.MG 18-2~~

~~(2) FLTA Flight Test Considerations.~~

~~(i) Flight-testing to verify the proper operation of the FLTA function can be conducted in an area where the terrain or obstacle elevation for the test runs is known to be within approximately 25 feet.~~

~~(ii) Test runs are recommended to be level flight at approximately the peak elevation of the Terrain or Obstacle. After caution and warning messages, the flight path should be adjusted to pass 50 to 100 feet above the terrain or obstacle of interest. The test runs should verify that:~~

~~(A) All alerts (caution and warnings) are given at an appropriate point in the run.~~

~~(B) All pop-up, auto-range, or other display features are working correctly.~~

~~(C) The display depicts the terrain or obstacle accurately.~~

~~(D) Low Altitude (if installed) alerts (cautions and warnings) are given at an appropriate point in the test run.~~

~~(E) Inhibit functions operate properly.~~

~~(3) Basic GPWS Flight Test Considerations. Flight-testing to verify the proper operation of Basic GPWS functions can be conducted in any area where the terrain elevation is known to the flight crew. The following information is intended to provide guidance for conducting flight tests to exercise and verify the proper operation of each GPWS function. The need to conduct flight-testing for follow-on HTAWS installations will depend upon the nature of the new or modified sensors and their impact on that particular GPWS function.~~

~~(i) Excessive Rates of Descent (Optional). This test should be conducted over level terrain or water. For Class (A) equipment, this test verifies the proper installation of barometric altitude (and the corresponding computation of barometric altitude rate) and radar altitude. Only one test run is required to determine proper installation.~~

~~(ii) Excessive Closure Rate to Terrain. This test should be conducted in an area of known rising terrain. It is recommended that one level test run at an altitude 200 feet above the terrain peak elevation be conducted. For Class (A) equipment only, this test will verify the proper installation of the radar altimeter.~~

~~(iii) Excessive Altitude Loss after Takeoff. This test is conducted after a normal takeoff profile has been established but before reaching pattern altitude. For~~

~~Class (A) equipment, this test verifies the proper installation of barometric altitude, barometric altitude rate, and radar altitude.~~

~~(iv) Flight into Terrain when Not in Landing Configuration. This test should be conducted while on a visual approach to a runway or over level terrain or water. For Class (A) equipment only, this test verifies the proper installation airspeed and radar altitude as well as the gear sensor inputs to HTAWS.~~

~~(v) Excessive Downward Deviation from an ILS Glide slope. This test should be conducted during an ILS approach. For Class (A) equipment only, this test will verify the proper installation of the ILS Glide slope input to HTAWS. For aircraft equipped with dual ILS system, both systems should be demonstrated.~~

~~(4) Terrain and Obstacle Display Flight Test Considerations.~~

~~(i) Flight testing to verify the proper operation of the Terrain and Obstacle Display should be conducted while verifying all the other required HTAWS functions.~~

~~(ii) Emphasis should be placed on verifying compliance with the provisions specified in paragraph **j(1)** (Terrain and Obstacle Display) of this document, during normal aircraft maneuvering during all phases of flight. Pop-up and auto-ranging features should be evaluated, if applicable.~~

~~(iii) The applicant should perform sustained standard rate turns to evaluate:~~

- ~~Symbol stability~~
- ~~Flicker~~
- ~~Jitter~~
- ~~Display update rate~~
- ~~Color cohesiveness~~
- ~~Readability~~
- ~~The use of color to depict relative elevation data~~
- ~~Caution and warning alert area depictions~~
- ~~Map masking~~
- ~~Overall suitability of the display~~

~~(5) Added Features Flight Test Considerations. Flight-testing should be used to verify the proper operation of additional implemented features (i.e. functions not defined by TSO C151b) such as:~~

~~Autorotation detection,~~

~~Tail Strike,~~

~~Bank angle,~~

~~Altitude call outs "Approaching Minimums," or~~

~~Other features not listed here.~~

~~(6) Corrected Pressure Altitude Variations in Cold Weather. The HTAWS may be designed to account for the effects of cold weather on barometric altitude, while determining vertical position. Flight-testing may be required, unless a suitable verification procedure can be conducted. This will depend on the design of the cold weather compensation. This test is not required for systems that do not use corrected pressure altitude for cold weather compensation.~~

~~q. Rotorcraft Flight Manual (RFM) or Rotorcraft Flight Manual Supplement (RFMS).~~

~~The applicant should make an evaluation to determine if there are any limitations of the system and, if so, how they will affect aircraft operations. Any limitations affecting operations should be included in the RFM or RFMS. As a minimum, the applicant should provide instructions in the Limitations Section of the RFM or RFMS that include the following as appropriate (i.e., for systems approved on a no operational credit basis):~~

~~(1) Limitations. The following instructions should be included in the Limitations section of all RFMs or RFMSs:~~

~~(i) Navigation must not be predicated upon the use of the HTAWS information.~~

~~**NOTE**: The Terrain and Obstacle Display is intended to serve as a terrain and obstacle awareness tool only. The Display and database may not provide the accuracy or fidelity on which to base routine navigation decisions and plan routes to avoid terrain or obstacles.~~

~~(ii) The status of the inclusion of Power Lines in the Obstacle Database must be stated.~~

~~(iii) Low Altitude Mode must not be selected when operating under IMC conditions except as required when performing offshore platform IMC Approach Procedures or other Special Procedures.~~

~~(iv) The operator must select a range below 3 miles or an alternate range that has been demonstrated by the applicant to be appropriate when low altitude mode is activated on displays that do not auto-range.~~

~~(2) Operational Considerations for Normal and Abnormal Procedures. In addition to the GPWS operational procedures, consider the following:~~

~~(i) Terrain or Obstacle Awareness Caution. When a terrain or obstacle awareness CAUTION occurs, verify the aircraft flight path and correct it, if required.~~

~~(ii) Terrain or Obstacle Awareness Warning. When a terrain or obstacle awareness WARNING occurs, immediately initiate a maneuver that will provide maximum terrain or obstacle clearance, until all alerts cease.~~

~~(iii) Audio Inhibit. For those installations that include the ability to inhibit all or some of the HTAWS audio alerts, the Flight Manual (or Supplement) should state:~~

- ~~When the audio inhibit function should be used.~~
- ~~What alerts are inhibited.~~
- ~~How long the alerts are inhibited.~~
- ~~How to re-establish the alerts.~~

~~For Example: "For operations in day VFR conditions where terrain clearance may be assured visually and HTAWS audio alerts will hamper aircrew performance, the AUDIO INHIBIT button may be pushed to inhibit all HTAWS audio alerts. The audio alerts will resume five minutes after inhibit is selected or when the AUDIO INHIBIT button is pressed again."~~

~~(iv) Altitude Reference. The Flight Manual (or Supplement) should explain how different altitude sources are blended to create the altitude used by the HTAWS. If the blended altitude is displayed to the pilot, a caution should state that ATC assigned or posted altitudes will be flown according to standard barometric altimeters with a correct altimeter setting. Blended altitudes may not provide adequate traffic separation. If the use of QFE altimeter settings adversely affects the performance of the HTAWS, procedures for QFE operations should be presented in the Flight Manual (or Supplement).~~

~~(v) Environmental Requirements. For operations in cold weather, either the system should be able to account for variations in cold weather at temperatures at~~

or below zero degrees Celsuis, or additional flight crew procedures should be ~~considered to address pressure altitude limits for vertical position determination. Limitations may be needed to address insufficient determination of the aircraft's vertical position in cold weather temperatures.~~

~~r. Instructions for Continued Airworthiness. Instructions for Continued Airworthiness are required by § 27.1529 as appropriate and in accordance with FAR/JAR 27 Appendix A. In addition to Appendix A requirements, the applicant should indicate when and how the terrain and obstacle databases need to be updated.~~

~~s. Additional Considerations to TSO C-151b Requirements for Helicopter Installation. Suggested consideration to TSO C-151b is provided below for helicopters installations. Items that are commentary only are italicized.~~

~~Class A~~

~~Additional Considerations to DO-161 Requirements~~

~~**Mode 1**~~

~~An Excessive Descent Rate warning function is not required but may be included optionally.~~

~~**Mode 2**~~

~~A Helicopter Class A TAWS should provide an Excessive Closure Rate to Terrain warning within a minimum of 8 seconds of impact with terrain. The system should provide a reduced nuisance free warning when in a landing flight profile. Provision should be made to prevent nuisance warnings during day VFR Low Altitude flying.~~

~~**Mode 3**~~

~~A Helicopter Class A TAWS should provide a warning of Excessive Altitude Loss during Takeoff. A warning should be generated if the aircraft losses more than 40% of its terrain clearance during takeoff. Takeoff is defined as at least the first 60 seconds of flights when greater than 50 knots and above 100 feet AGL.~~

~~**Mode 4**~~

~~A Helicopter Class A TAWS should provide a warning of Insufficient Terrain Clearance when not in a landing configuration (Gear Up) by 150 feet AGL for retractable gear aircraft. For fixed gear aircraft, a warning of Insufficient Terrain Clearance when not at landing speeds should be provided by 100 feet AGL. During an autorotation, improper landing gear configuration warnings should be provided in sufficient time to extend the gear before landing, based on specific helicopter autorotation performance, i.e. rate of descent and time to extend gear.~~

~~**Mode 5** No change is necessary for Mode 5.~~

~~Additional or Modified Requirements to TSO C-151b for Helicopter Installation~~
~~**Required Obstacle Clearance (ROC) and Required Terrain Clearance (RTC) By Phase of Flight**~~

~~Alternate Figure AC 27.MG 18-2.1 is shown below.~~

~~TAWS REQUIRED TERRAIN CLEARANCE (RTC) BY PHASE OF FLIGHT~~

~~Phase of Flight~~	~~TERPS (ROC)~~	~~TAWS (RTC) Level Flight~~	~~TAWS (RTC) Descending~~
~~En route~~	~~1000 Feet~~	~~150 Feet~~	~~100 Feet~~
~~Terminal (Intermediate Segment)~~	~~500 Feet~~	~~150 Feet~~	~~100 Feet~~
~~Approach~~	~~250 Feet~~	~~150 Feet~~	~~100 Feet~~
~~Departure (See Note 1)~~	~~48 Feet/NM~~	~~100 Feet~~	~~100 Feet~~

~~Note 1: During the Departure Phase of Flight, the FLTA function of Class A and B equipment should alert if the aircraft is projected to be within 100 feet vertically of terrain. However Class A and Class B equipment should not alert if the aircraft is projected to be more than 150 feet above the terrain.~~

~~Alternate FIGURE AC 27. MG 18-2.1~~

~~**Premature Descent Alert (PDA)**~~

~~*Since helicopters frequently land at off-airport sites, the PDA is inappropriate.*~~

~~**Voice Callouts**~~

~~*Sincehelicopters frequently operate at or below 500 feet AGL, this callout is inappropriate.*~~

~~**Altitude Accuracy**~~ ~~A new requirement is proposed.~~

~~A means should be provided to compute actual MSL altitude and a Vertical Figure of Merit (VFOM). FLTA warning altitudes should compensate for estimated altitude errors.~~

~~**Aural and Visual Alerts**~~ ~~An addition to Table 4.1 of TSO C-151b is proposed.~~

~~Add the message **"Warning Terrain"** to Warning Aural Alert messages for Reduced Required Terrain Clearance and Imminent Impact with Terrain.~~

~~**Low Altitude Mode**~~ ~~A new helicopter requirement is proposed.~~

~~A means should be provided to manually select a reduced sensitivity state for Low Altitude and High Density Metropolitan operation.~~

~~Class B~~

~~Helicopter Additions/Replacements to DO-161A~~

~~**Mode 1**~~

~~*Mode 1 is not a significant component of Helicopter CFIT accident history. Because of the complexity of Autorotation detection, Mode 1 should not be required for Class B helicopter equipment.*~~

~~**Mode 3**~~

~~*Adequate coverage for inadvertent descent after takeoff should be provided by the FLTA function, or other Mode 3 algorithm that prevents CFIT during takeoff.* Takeoff is defined as at least the first 60 seconds of flights when greater than 50 knots and above 100 feet AGL.~~

~~Helicopter Additions/Replacements to TSO C-151b~~

~~**Voice Callouts**~~

~~*Since helicopters frequently operate at or below 500 feet AGL, this callout is inappropriate.*~~

~~Test Conditions (Appendix 3)~~

~~Exclude TSO C-151b paragraphs 1.1 through 1.6 as not applicable.~~

~~TSO C-151b paragraph 1.7 applies as written.~~

~~TSO C-151b paragraphs 2.0 through 2.2 apply using Table G for speed cases of 100 through 160 knots.~~

~~TSO C-151b paragraphs 3.0 and 3.1 are excluded as not applicable.~~

~~TSO C-151b paragraphs 4.0, 4.2, and 4.3 apply as written. Case 4.1 is excluded as not applicable.~~

~~TSO C-151b paragraphs 5.0 and 5.1 are applicable as written.~~

~~TSO C-151b paragraphs 6.0 through 6.3 are to be determined.~~

~~TSO C-151b paragraphs 7.0, 8.0, and 9.0 are excluded as described above in sections 2.1 and 2.2.~~

AC 27-1B
APPENDIX A
INSTRUCTIONS FOR CONTINUED AIRWORTHINESS

Instructions for Continued Airworthiness (ICA) are required by Federal Aviation Regulations (FAR)/Joint Airworthiness Regulations (JAR) § 27.1529. Appendix A to FAR/JAR Part 27 specifies the requirements for Instructions for Continued Airworthiness. The following 70 pages for this AC 27-1B, Appendix A, provide a template for the ICA. This ICA Template was prepared to assist applicants in preparing an ICA for their type design change to rotorcraft.

The guidance is intended for applicants that are required to comply with FAR/JAR § 27.1529 to prepare Instructions for Continued Airworthiness acceptable to FAA/AUTHORITY.

The ICA Template contains requirements of Appendix A to FAR/JAR Part 27, identified by **bold type**. The **bold type** requirements are to be included in the applicant Instructions for Continued Airworthiness as applicable to the applicant's type design change. Items in regular type are not required by FAR/JAR; however, these items are an aviation industry standard and are found in most current Instructions for Continued Airworthiness. <u>The underlined words and sentences are to emphasize the information.</u> It is recommended the applicant include those in their ICA for standardization and clarity.

The ICA Template is arranged as a sample Instructions for Continued Airworthiness document and can be used as a template for the preparation of the applicant's Instructions for Continued Airworthiness. The ICA Template was prepared to cover a complete rotorcraft. <u>The applicant for a type design change need not include all information for the appropriate type design, only the applicable information to their type design change.</u>

Appropriate text in regular type can be copied from the ICA Template. Text in *italics* and the appendices are for instructions and are not to be copied.

The ICA Template is formatted using the Airline Transport Association (ATA) Chapter numbering system. The ATA Chapter format is not required; however, it is recommended. The ATA chapter numbers that are not listed in this document do not relate to ICA's and are not used in the ATA system for ICA's (Maintenance Manual). The Standard Practices chapters are broken out separately from the other listed chapters because they are not a requirement. However, Standard Practices are an industry standard and are found in most industry Maintenance Manuals.

AC 27-1B
APPENDIX A
INSTRUCTIONS FOR CONTINUED AIRWORTHINESS
(continued)

The set of parentheses in the index and chapters indicates the chapter on the ICA Template that is applicable to various ATA chapters. The set of parentheses in Figure 1 and Figure 2 is used to indicate the applicability of the item for that type design change.

Instructions for Continued Airworthiness will be reviewed and evaluated by FAA/AUTHORITY to ascertain their acceptability.

INSTRUCTIONS FOR CONTINUED AIRWORTHINESS TEMPLATE

(COMPANY NAME)

INSTRUCTIONS FOR CONTINUED AIRWORTHINESS

(DRAWING/PHOTOGRAPH)
(OPTIONAL)

(*ROTORCRAFT MAKE AND MODEL*)

REVISION: ***(DATE)***
Revision 4 *Page i*

THIS PAGE INTENTIONALLY LEFT BLANK

(MANUAL IDENTIFICATION)

RECORD OF REVISIONS

REVISION NUMBER	ISSUE DATE	DATE INSERTED	BY	REVISION NUMBER	ISSUE DATE	DATE INSERTED	BY
Original	08/04/97	09/03/97	E. R. THOMAS				
1	01/30/98	02/14/98	E. R. THOMAS				
2	06/18/98	07/02/98	E. R. THOMAS				
3	10/21/99	11/01/99	E. R. THOMAS				
4	08/04/00	08/24/00	E. R. THOMAS				

THIS PAGE INTENTIONALLY LEFT BLANK

(MANUAL IDENTIFICATION)

LIST OF EFFECTIVE PAGES

LIST OF REVISIONS

Revision 0 (Original Issue).....*August 4, 1997*
Revision 1 .....……*January 30,1998*
Revision 2 ……*June 18,1998*
Revision 3 ……..*October 21,1999*
Revision 4 ……..August 4, 2000

LIST OF EFFECTIVE PAGES

Title	Pages	Revision No.
COVER	*i, ii BLANK*	*4*
RECORD OF REVISION	*iii, iv BLANK*	*4*
LIST OF EFFECTIVE PAGES	*v THRU vi*	*4*
TABLE OF CONTENTS	*vii THRU x*	*4*
CHAPTER 1 INTRODUCTION 01-00-00	*1 THRU 8*	*4*
CHAPTER 4 AIRWORTHINESS LIMITATION SECTION 04-00-00	*1, 2 BLANK*	*4*
CHAPTER 5 INSPECTIONS 05-00-00	*1 THRU 4*	*4*
CHAPTER 6 DIMENSION AND ACCESS 06-00-00	*1, 2 BLANK*	*3*
CHAPTER 7 LIFTING AND SHORING 07-00-00	*1, 2 BLANK*	*2*
CHAPTER 8 LEVELING AND WEIGHING 08-00-00	*1, 2 BLANK*	*3*
CHAPTER 9 TOWING AND TAXIING 09-00-00	*1, 2 BLANK*	*2*
CHPATER 10 PARKING AND MOORING 10-00-00	*1, 2 BLANK*	*4*
CHAPTER 11 PLACARDS AND MARKING 11-00-00	*1, 2 BLANK*	*4*
CHAPTER 12 SERVICING 12-00-00	*1, 2 BLANK*	*2*
CHAPTERS 20, 51, 60, 70, STANDARD PRACTICES ( )-00-00	*1, 2 BLANK*	*3*
CHAPTERS 21, 22, 23, 24, 25, 26, 27, 29, 30, 31, 33, 34, 35, 36, 37, 45, 49, AIRFRAME SYSTEM ( )-00-00 52, 53, 54, 55, 56, STRUCTURES ( )-00-00 62, 63, 64, 65, 66, 67 ROTORS ( )-00-00 71, 72, 73, 74, 75, 76, 77, 78, 79, 80, and 83 POWERPLANT ( )-00-00	*1,2 ,3, 4, 5,*	*3*
	6, 7, 8	*4*
Attachment 1 PART 27 REQUIREMENTS	*1, THRU 5, 6 BLANK*	*4*
Attachment 2 INSTRUCTIONS FOR CONTINUED AIRWORTHINESS PROCEDURE INFORMATION	*1 AND 2*	*3*
Attachment 3 ATA CHAPTER LISTING	*1, 2 BLANK*	*3*
Attachment 4 TYPE DESIGN CHANGE ICA RECOMMENDED PROCEDURE	*1, THRU 9,10 BLANK*	*4*

(MANUAL IDENTIFICATION)

LIST OF EFFECTIVE PAGES

a. The applicant should provide a means of identifying each page of the Instructions for Continued Airworthiness (ICA) so maintenance personnel know they have a complete and current ICA. There is no requirement for a specific format; however, there is an established standard format that has been used by industry for many years. This standard is the List of Effective Pages.

b. The applicant should list all pages, their revision number and revision date contained in the applicant's ICA on a "List of Effective Pages" page either for the complete manual or by each chapter. If individual chapter method is used, the manual should have a master "List of Effective Pages" page containing all the chapters and their revision numbers.

c. A page means a single side of a leaf within the ICA. When no text is intended for a page the following statement should be on the blank page: THIS PAGE INTENTIONALLY LEFT BLANK. *In addition the intentionally left blank page should contain the manual identification, revision number and page number. If a page has not been revised from the original issue, then this will always be designated with a revision number of "O." It is a standard industry practice to list "Revision O" to indicate an original issue page. The revision number will remain the same until ICA is accepted by the FAA/AUTHORTY regardless of the number of draft changes made prior to acceptance.*

d. *The section that lists multiple chapters and has parentheses ( )-00-00 indicates that the information is applicable to any of those chapters; i.e., Chapters 21, 33, 52, 67, or 71 of the ATA chapter format. The chapter numbers are not sequential because those missing chapters are not applicable to rotorcraft.*

(MANUAL IDENTIFICATION)

TABLE OF CONTENTS

Identification	**Title**	**Page**
CHAPTER 1	*INTRODUCTION 01-00-00*	*1*
	1. ACCEPTABLE TO THE FAA /AUTHORITY	*1*
	2. MANUALS	*2*
	3. CONTENTS	*2*
	4. SCOPE	*2*
	5. PURPOSE	*2*
	6. ARRANGEMENT	*2*
	7. SUPERSEDED DOCUMENTS	*3*
	8. APPLICABILITY	*3*
	9. DEFINITIONS	*3*
	10. ABBREVIATIONS	*3*
	11.ACRONYMS	*3*
	12. SYMBOLS	*4*
	13. PRECAUTIONS	*4*
	14. UNITS OF MEASUREMENT	*4*
	15. ICA FOR EACH ENGINE	*4*
	16. ICA FOR EACH ROTOR	*4*
	17. ICA FOR EACH APPLIANCE REQUIRED BY THIS CHAPTER	*4*
	18. INFORMATION ESSENTIAL TO THE CONTINUED AIRWORTHINESS OF THE ROTORCRAFT	*5*
	19. REFERENCED PUBLICATIONS	*6*
	20. DISTRIBUTION	*7*
	21. ROTORCRAFT FEATURES	*7*
	22. CORRECTIONS TO ORIGINAL INSTRUCTIONS FOR CONTINUED AIRWORTHINESS	*8*
	23. INDICATING CHANGES TO INSTRUCTIONS FOR CONTINUED AIRWORTHINESS	*8*
CHAPTER 4	*AIRWORTHINESS LIMITATIONS SECTION 04-00-00*	*1*
	1. AIRWORTHINESS LIMITATIONS INFORMATION	*1*
	2. NO AIRWORTHINESS LIMITATIONS INFORMATION REQUIRED.	*1*
CHAPTER 5	*INSPECTION REQUIREMENTS AND OVERHAUL SCHEDULE 05-00-00*	*1*
	1. INSPECTION REQUIREMENTS	*1*
	2. COMPONENT OVERHAUL SCHEDULE	*3*
	3. NO OVERHAUL REQUIRMENTS	*3*
	4. INSPECTION EXAMPLE	*3*

(MANUAL IDENTIFICATION)

TABLE OF CONTENTS
(Continued)

Identification	Title	Page
CHAPTER 6	*DIMENSIONS AND ACCESS 06-00-00*	*1*
	1. AN EXPLANATION OF THE ROTORCRAFT FEATURES	*1*
	2. LOCATION OF ACCESS PANELS	*1*
	3. DIAGRAM OF STRUCTURAL ACCESS PLATES AND INFORMATION NEEDED TO GAIN ACCESS FOR INSPECTION WHEN ACCESS PLATES ARE NOT PROVIDED	*1*
CHAPTER 7	*LIFTING AND SHORING 07-00-00*	*1*
	1. LIFTING	*1*
	a. JACKING INFORMATION	*1*
	b. LIFTING INSTRUCTIONS	*1*
	2. SHORING INSTRUCTIONS	*1*
CHAPTER 8	*LEVELING AND WEIGHING 08-00-00*	*1*
	1. LEVELING INFORMATION	*1*
	2. WEIGHING AND DETERMINING THE CENTER OF GRAVITY INSTRUCTIONS.	*1*
CHAPTER 9	*TOWING AND TAXIING 09-00-00*	*1*
	1. TOW INSTRUCTIONS	*1*
	2. TAXIING INSTRUCTIONS	*1*
CHAPTER 10	*PARKING AND MOORING 10-00-00*	*1*
	1. MOORING INFORMATION	*1*
	2. PARKING INFORMATION	*1*
	3. STORAGE LIMITATIONS	*1*
CHAPTER 11	*PLACARDS AND MARKINGS 11-00-00*	*1*
	1. PLACARD AND MARKING INFORMATION	*1*
CHAPTER 12	*SERVICING 12-00-00*	*1*
	1. SERVICING INFORMATION	*1*
	2. LUBRICATION INFORMATION	*1*
	3. EQUIPMENT REQUIRED FOR SERVICING	*1*
	4. CONSUMABLE MATERIALS	*1*
CHAPTERS 20,51,60,70	*STANDARD PRACTICES ( )-00-00*	*1*
	1. STANDARD PRACTICES	*1*
	2. STANDARD PRACTICES INFORMATION	*1*

(MANUAL IDENTIFICATION)

TABLE OF CONTENTS
(Continued)

Identification	**Title**	**Page**
CHAPTERS	*21, 22, 23, 24, 25, 26, 27, 29, 30, 31,33, 34, 35, 36, 37, 45,*	
	49 AIRFRAME SYSTEMS ( )-00-00	
	52, 53, 54, 55, 56. STRUCTURES ( )-00-00	
	62, 63, 64, 65, 66, 67, ROTORS ( )-00-00	
	71, 72, 73, 74, 75, 76, 77, 78, 79, 80, and 83 POWERPLANT ( )-00-00	*1*
	REQUIREMENTS	*1*
	1. INTERFACE INFORMATION	*1*
	2. DESCRIPTION OF ROTORCRAFT AND ITS SYSTEMS AND INSTALLATIONS	*1*
	3. DESCRIPTION OF ROTORCRAFT'S ENGINE(S)	*1*
	4. DESCRIPTION OF ROTORCRAFT'S ROTOR(S)	*2*
	5. DESCRIPTION OF ROTORCRAFT'S APPLIANCES	*2*
	6. BASIC CONTROL AND OPERATING INFORMATION	*2*
	7. SERVICING INFORMATION	*3*
	8. LOCATION OF ACCESS PANELS	*3*
	9. LUBRICATION INFORMATION	*3*
	10. EQUIPMENT REQUIRED FOR SERVICING	*4*
	11. RECOMMENDED PERIODS	*4*
	12. DEGREE OF THE INSPECTION	*4*
	13. WORK RECOMMENDED	*5*
	14. APPLICABLE WEAR TOLERANCE	*5*
	15. TROUBLESHOOTING	*5*
	16. ORDER AND METHOD OF REMOVAL	*6*
	17. ORDER AND METHOD OF REPLACING	*6*
	18. GENERAL PROCEDURAL INSTRUCTIONS - TESTING	*6*
	19. GENERAL PROCEDURAL INSTRUCTIONS - CHECKING	*7*
	20. STORAGE LIMITATIONS	*7*
	21. SPECIAL INSPECTION TECHNIQUES	*7*
	22. PROTECTIVE TREATMENT	*7*
	23. STRUCTURAL FASTENERS	*8*
	24. SPECIAL TOOLS	*8*
Attachment 1	*PART 27 REQUIREMENTS*	*1*
Attachment 2	*INSTRUCTIONS FOR CONTINUED AIRWORTHINESS PROCEDURES INFORMATION*	*1*
Attachment 3	*ATA CHAPTER LISTINGS*	*1*
Attachment 4	*TYPE DESIGN CHANGE ICA RECOMMENDED PROCRDURE*	*1*

(MANUAL IDENTIFICATION)

TABLE OF CONTENTS
(Continued)

There is no requirement for a specific format for the Table of Contents. The Table of Contents may be for the complete manual, for each chapter, or for both. When a Table of Contents for each chapter is used, there should be a Table of Contents that lists all Chapters in the ICA.

(*MANUAL IDENTIFICATION)*

CHAPTER 1
INTRODUCTION

*The requirements of Appendix A to Part 27are identified by **bold type** and are contained in the Introduction Chapter of this document. These requirements should be included in the Instructions for Continued Airworthiness (ICA). Items in regular type are not required by the Federal Aviation Regulations (FAR)/Joint Airworthiness Regulation (JAR), but we recommend the applicant include those items in the ICA for standardization and clarity. The underlined words and sentences are to emphasize the information. The same requirements exist for a Type Certificate (TC), Supplemental Type Certificate (STC), or other changes to the type design as specified in the Type Certificate Data Sheet accepted under a Field Approval (FA). The term Type Design Change refers to changes to the type design of the rotorcraft made under TC, STC, or FA. ICA for Type Design Change (TDC) need not include ATA chapters not affected by the modification. Appropriate text in regular type can be copied from the ICA Template. Text in italics and the appendices are for instruction and are not to be copied.*

This guidance is intended for applicants who are required to comply with § 27.1529, Amendment 18, to prepare an ICA acceptable to the FAA/AUTHORITY, and applicants required to prepare an ICA for a major alteration accepted under a FA. The ICA Template may be used by any applicant who wishes to prepare an ICA.

1. ACCEPTABLE TO THE FAA/AUTHORITY

a. The applicant must prepare Instructions for Continued Airworthiness in accordance with Appendix A to FAR/JAR Part 27 that are acceptable to the FAA/AUTHORITY. Reference § 27.1529. *- As appropriate.*

b. For the applicant's proposed ICA to be acceptable to the FAA/AUTHORITY, they should contain:

(1) The applicable requirements specified in Appendix A to FAR/JAR Part 27.

(2) Correct terminology and/or correct references.

(3) A Cover Page that will readily identify the publication as the applicant's ICA for that make and model rotorcraft.

(4) A revision control procedure and Record of Revisions that will show currency of the ICA.

(5) A means of identifying each page of the publication and a List of Effective Pages that lists each page and its revision number.

(6) A Table of Contents indicating the subject and location and providing ease of use for maintenance personnel.

c. FAA/AUTHORITY cannot make a determination of acceptability of the ICA without a complete ICA and all publications referenced in the applicant's ICA. ICA review will be discontinued when it is determined:

(1) The ICA is not complete.

(2) That all referenced publications were not submitted with the ICA.

CHAPTER 1
INTRODUCTION
(Continued)

(3) The applicant did not audit the ICA to ensure it met the requirements specified in Appendix A of FAR/JAR Part 27.

d. No determination of correct spelling, proper grammar, or accuracy of the information will be made by the FAA/AUTHORITY

e. FAA/AUTHORITY reviews and determines the acceptability of ICA. This ICA Template contains the requirements specified in Appendix A to FAR/JAR Part 27 and other items which are not specifically required by the FAR/JAR, but are needed to ensure that maintenance personnel have complete, correct, and current ICA.

f. Acceptance of the ICA is indicated by a signed and dated acceptance statement on the List of Effective Pages in the ICA.

2. MANUALS. ***The ICA must be in the form of a manual or manuals as appropriate for the quantity of data to be provided. Reference Appendix A, A27.2 (a).***

3. CONTENT. ***The contents of the ICA must be prepared in the English language and must contain all items specified in Appendix A of Parts 27. Reference Appendix A, A27.3.***

4. SCOPE.
a. *Describe the scope of the ICA.*

b. The scope normally includes the necessary information to carry out maintenance on the applicable rotorcraft or modification to a rotorcraft.

5. PURPOSE. De*scribe the purpose of the ICA*.

6. ARRANGEMENT.
a. ***The applicant must provide a practical arrangement in the manual. Reference Appendix A, A27.2 (b).***

b. The Introduction of the ICA should explain the manual arrangement and how to use it. There is no requirement for any specific format or arrangement of the manual or manuals.

c. For standardization, we recommend using the ATA-100 numbering system and the format and content of this ICA Template.

(*MANUAL IDENTIFICATION)*

CHAPTER 1
INTRODUCTION
(Continued)

d. The manual should not be in a mixed arrangement, i.e., a mixture of written text on both sides of a page and written text on one side of a page. The preferred method is written text on both sides of a page.

e*. When there is no written text for a page, the page should contain the following statement:*

THIS PAGE INTENTIONALLY LEFT BLANK

The page should be identified in the same manner as the rest of the pages in the manual and the page listed in the List of Effective Pages.

7. SUPERSEDED DOCUMENTS*. For Type Design Changes, the ICA should contain the following statement:*

Superseded Documents: The information, procedures, requirements, and limitations contained in this Instructions for Continued Airworthiness for this type design change supersede the information, procedures, requirements and limitations contained in the rotorcraft's maintenance manual when the type design change is installed on the Type Certificate Holder's rotorcraft.

8. APPLICABILITY. *The ICA should include the make, model, and serial number (if applicable) of rotorcraft to which the ICA apply.*

9. DEFINITIONS. Some w*ords or terms used in the ICA require defining in the Introduction.* AUTHORITY means another airworthiness authority that has adopted this ICA.

10. ABBREVIATIONS. *Abbreviations used in the ICA should be listed with their words/terms in the Introduction of the ICA.*

a. FAA/AUTHORITY = Federal Aviation Administration or another airworthiness authority
b. FAR = Federal Aviation Regulation
c. ICA = Instructions for Continued Airworthiness
d. JAR = Joint Airworthiness Regulations
e. LOAP = List of Applicable Publications
f. TDC = Type Design Changes

11. ACRONYMS. *Acronyms used in the ICA should be listed with their terms in the Introduction of the ICA.*

CHAPTER 1
INTRODUCTION (continued)

12. SYMBOLS. *Symbols used in the ICA should be listed with explanations in the Introduction of the ICA.*

13. PRECAUTIONS. Precaution means a measure taken beforehand to prevent harm.

a. Any necessary precautions to be taken must be included in the ICA. Reference Appendix A, A27.3 (b)(3).

b. The following examples of precautions will differ due to the seriousness of the hazard or condition:

(1) **WARNING:** *Could be a maintenance procedure, practice, condition, etc. that could result in personal injury or loss of life.*

(2) **CAUTION:** *Could be a maintenance procedure, practice, condition, etc. that could result in damage or destruction of equipment.*

(3) **NOTE:** *Could be a maintenance procedure, practice, condition, etc., or a statement which needs to be highlighted.*

14. UNITS OF MEASUREMENT

a. *The ICA contains units of measurements. These measurements could be instrument readings, temperatures, pressures, tolerances, limits, or torque values.*

b. It is recommended the ICA contains both United States standard measurements and Metric measurement, for each measurement, tolerance, or torque value. A general conversion chart is not acceptable.

15. ICA FOR EACH ENGINE

a. The ICA must include ICA for each engine. Reference Appendix A, A27.1 (b).

b. ICA for type certificated engines are accepted by the FAA/AUTHORITY responsible for engines and could be included by reference in the applicant's ICA.

c. ICA for non-type certificated engines are prepared by the applicant and submitted to appropriate FAA/AUTHORITY for review and evaluation.

16. ICA FOR EACH ROTOR

a. The ICA must include ICA for each rotor. Reference Appendix A, A27.1 (b).

b. ICA for rotors is normally included in the rotorcraft ICA.

17. ICA FOR EACH APPLIANCE REQUIRED BY THIS CHAPTER

a. *The ICA must include ICA for each appliance required by FAR/JAR. Reference Appendix A, A27.1 (b).*

b. FAA/AUTHORITY-accepted ICA for an appliance could be included by reference in the applicant's ICA.

c. When an appliance is required to be installed by a TDC, or the appliance is required by FAR/JAR and the applicant must prepare ICA that is acceptable to the FAA/ AUTHORITY.

d. The FAA/AUTHORITY-accepted appliance ICA normally does not address interface information. The applicant should prepare information on how that appliance interfaces with the rotorcraft. Interface information should include appliance location, appliance attachment, if applicable the system(s) from which the appliance receives it electrical power, fluid (fuel, oil, hydraulic, etc.), vacuum, pneumatic, etc., and how the appliance is controlled.

e. When the ICA for an appliance is not FAA/AUTHORITY accepted, the applicant should prepare the ICA for that appliance which meets the requirements specified in Appendix A to FAR/JAR Part 27. The ICA for each appliance could be a stand-alone document or could be included in the applicant's ICA document for that TDC.

f. When an original appliance is replaced with a different appliance as part of the TDC, the applicant should prepare the ICA for that appliance which meets the requirements specified in Appendix A to FAR/JAR Part 27. A different appliance is one that has a different part number, or model number, or is made by the same manufacturer or different manufacturer.

g. *As defined in FAR/JAR Part 1, Appliance means any instrument, mechanism, equipment, part, apparatus, appurtenance, or accessory, including communications equipment, that is used or intended to be used in operating or controlling an aircraft in flight, is installed in or attached to the aircraft, and is not part of an airframe, engine, or propeller. Avionics equipment is an appliance.*

> *NOTE: Some applicants may wish to include Amendment 18 to FAR/JAR Part 27 in the certification basis for their TDC and prepare the ICA for their TDC even though the certification basis for the rotorcraft does not require acceptance of the ICA by the FAA/AUTHORITY. These applicants will be required to obtain FAA/AUTHORITY acceptance for their ICA.*

18. INFORMATION ESSENTIAL TO THE CONTINUED AIRWORTHINESS OF THE ROTORCRAFT

a. If ICA are not supplied by the manufacturer of an appliance or product (engine or rotor), t*he ICA must include the information essential to the continued airworthiness of the rotorcraft. Reference Appendix A, A27.1(b).*

b. The applicant should include in their ICA the information necessary to service, maintain, and inspect the rotorcraft, its engines, rotors, and appliances, in an airworthy condition and ensure they meet type design. Appendix A to FAR/JAR Part 27 specifies minimum requirements. The applicant determines the information essential to the continued airworthiness.

c. The information essential to the continued airworthiness of the rotorcraft its engines, rotors and appliances could be contained in the applicant's ICA, engine ICA, appliance ICA or other applicant-associated publications, i.e., overhaul manuals, illustrated parts catalog, or flight manual. Those ICA's and associated publications that are listed in the applicant's List of Applicable Publications (LOAP) constitute the information essential for continued airworthiness for that rotorcraft, its engines, rotors, and appliances or that TDC. The LOAP is contained in the Introduction section of the applicant's ICA. The LOAP should contain one of the following statements: "The publications listed in the LOAP constitute the information essential for continued airworthiness for the rotorcraft" or "The publications listed in the LOAP constitute the information essential for continued airworthiness for the TDC."

19. REFERENCED INFORMATION

a. Appendix A to FAR/JAR Part 27 allows an applicant to refer to an accessory, instrument, or equipment manufacturer as the source of this information if the applicant shows that the item has an exceptional high degree of complexity requiring specialized maintenance techniques, test equipment, or expertise.

b. When the applicant has shown that the accessory, instrument, or equipment meets the requirements of 19a above, the manufacturer's information could be referred to as the source of the information. The information refers to those specified in Appendix A, Section A27.3, Contents, Paragraph (b)(1). The applicant has responsibility for securing authorization to use that information in their ICA.

c. The information is limited to scheduling for each of the accessories, instruments, and equipment that provides the recommended periods at which they should be cleaned, inspected, adjusted, tested, and lubricated. In addition, they could be the source of information for the degree of inspection, applicable wear tolerances, and work recommended at these periods.

d. The FAR/JAR allows an applicant to refer to Engine ICA and Appliance ICA, which are FAA/AUTHORITY-accepted, and the applicant's associated publications in the applicant's ICA. See Introduction Section, Paragraph's 15, 16, and 17.

e. Any ICA or associated publications referenced in the applicant's ICA should be submitted with the applicant's ICA.

(*MANUAL IDENTIFICATION)*

CHAPTER 1
INTRODUCTION
(Continued)

20. DISTRIBUTION

a. *The ICA must include a program to show:*

(1) Distribution of changes to the ICA made by the applicant.

(2) Distribution of changes to the ICA made by the manufacturer of the engine or engines, rotor or rotors, and appliances installed on the rotorcraft.
Reference Appendix A, A27.1 (c).

b. The introduction of the applicant's ICA should contain the procedure used to distribute changes to persons who maintain the rotorcraft or who have incorporated the TDC.

c. When the applicant has referenced FAA/AUTHORITY accepted publications in their ICA, the procedure used to ensure changes to those referenced publications are distributed to persons who maintain the rotorcraft or who have incorporated the TDC. The procedures should be explained in the introduction of the applicant's ICA.

d. ICA normally includes a procedure for making changes to the applicant's ICA. The introduction should include a description of the revision procedure. The procedure should contain information on the type of revisions, composition of the revision, revision control procedure, revision log page, updating procedure, and procedure for purchase of revisions and renewal of subscription.

21. ROTORCRAFT FEATURES

a. *The ICA must include introduction information that includes:*

(1) An explanation of the rotorcraft's features; and,

(2) Data to the extent necessary for maintenance and preventive maintenance.
Reference Appendix A, A27.3 (a)(1).

b. The ICA normally contain a description which includes:

(1) The explanation of the rotorcraft's features:

(a) General information about the rotorcraft features.

(b) Exterior features.

(c) Interior features including cockpit, and cabin.

(d) Other features.

c. A figure showing the features is helpful and does not require detailed explanation.

d. The data necessary for maintenance and preventive maintenance is normally described in the applicable chapter and is determined by the applicant.

(MANUAL IDENTIFICATION)

CHAPTER 1
INTRODUCTION
(Continued)

22. CORRECTIONS TO ORIGINAL INSTRUCTIONS FOR CONTINUED AIRWORTHINESS

a. Any correction made to Draft Instructions for Continued Airworthiness prior to FAA/AUTHORITY acceptance should have the same revision number and date as the draft page originally submitted.

b. *Changes or corrections made to ICA after FAA/AUTHORITY acceptance of ICA are considered to be a revision.*

23. INDICATING CHANGES TO INSTRUCTIONS FOR CONTINUED AIRWORTHINESS

The applicant could use any means to indicate changes to their ICA. The following is an example used in the ICA Template.

a. Any change to the ICA should be indicated as follows:

(1) Changes made to a line should be indicated by a vertical bar in the left margin next to the line.

(2) Changes made to a paragraph should be indicated by a vertical bar in the left margin next to the paragraph letter or number.

(3) Changes made to a complete page should be indicated by a vertical bar to the right of the page number.

b. Only revisions should contain change bars. Change bars are used to indicate changes for that revision. Previous change bars should be removed at the next revision.

(MANUAL IDENTIFICATION)

CHAPTER 4
AIRWORTHINESS LIMITATION SECTION

1. AIRWORTHINESS LIMITATIONS INFORMATION

a. The ICA must have in the principal manual a section titled "Airworthiness Limitations." This section should be segregated and clearly distinguishable from the rest of the maintenance manual and contain:

(1) Each mandatory replacement time.

(2) Each structural inspection interval and related structural inspection procedure approved under §§ 27.571.

(3) A legible statement in a prominent location indicating that the Airworthiness Limitations section is FAA/AUTHORITY approved and specifies required maintenance and/or inspections. The exact, required wording of this statement is found in the FAR/JAR. Reference Appendix A, A27.4

b. The Airworthiness Limitations Section will be evaluated and approved by FAA/AUTHORITY.

2. NO AIRWORTHINESS LIMITATIONS INFORMATION REQUIRED:

When the applicant's type design has no airworthiness limitations, the Airworthiness Limitations Section of the ICA should contain the following statement:

"No airworthiness limitations associated with this type design change."

THIS PAGE INTENTIONALLY LEFT BLANK

(*MANUAL IDENTIFICATION)*

CHAPTER 5
INSPECTION REQUIREMENTS AND OVERHAUL SCHEDULE

1. INSPECTION REQUIREMENTS -

a. T*he ICA must include:*

(1) The recommended period at which each part of the rotorcraft and its engine(s), auxiliary power unit, rotor(s), accessories, instruments and equipment shall be inspected. Reference Appendix A, A27.3 (b)(1).

(2) The degree (scope) of the inspection for each part of the rotorcraft and its engine(s), auxiliary power unit, rotor(s), accessories, instruments and equipment. Reference Appendix A, A27.3 (b)(1).

(3) An inspection program that includes the frequency and extent of the inspection necessary to provide for the continued airworthiness of the rotorcraft. Reference Appendix A, A27.3 (b)(1).

b. This chapter should contain a schedule of the interval for all inspections. The inspection intervals may be in cycles, hours, and/or calendar time.

c. In the introduction of this chapter, it should explain all required inspections and should include:

(1) The different type of inspections.
(a) Scheduled Inspections.
(b) Special Inspections.
(c) Conditional Inspections.
(2) An explanation of each inspection.
(3) A list of all inspections (daily, 300-hour, 600-hour, annual, special inspection, etc.).

d. This chapter should contain the scope of the inspection(s). It should also describe the intent of the inspection and should address at least the following:

(1) What the inspector should be looking for when inspecting the product or appliance. (cracks, corrosion, delamination, dents, bends, wear, etc.)
(2) Location of the product or appliance to be inspected.
(3) Any special techniques required to inspect the product or appliance.
(4) Instructions to be followed when inspecting the product or appliance.
(5) Any tools or equipment required to accomplish the inspection of the product or appliance.
(6) The wear tolerances for a product or appliance when the inspection requires the product or appliance to meet a standard.

e. This chapter should contain an inspection program which contains an outline of the order of the inspections and instructions to be followed during the inspection and should include:

(1) General information such as:
(a) The title of the inspection.

(MANUAL IDENTIFICATION)

CHAPTER 5
INSPECTION REQUIREMENTS AND OVERHAUL SCHEDULE
(continued)

(b) Aircraft information (registration number, serial number, total time in service).
(c) General information about the inspection.
(d) Provide a block for the inspector or maintenance personnel to initial when each item has been inspected or action taken.
(e) Provide a signature line for the inspector and maintenance personnel to sign when the inspection has been accomplished.
(f) Provide a place to enter the date the inspection was completed.

(2) Pre-Inspection activities such as:
(a) Maintenance records review.
(b) Airworthiness Directive review.
(c) Overhaul and Life Limits requirements review.

(3) Maintenance Practices are associated with an inspection such as:
(a) Removal of cowling, panels, plates and covers to access items being inspected.
(b) Cleaning of the item to be inspected. Specify type and number of cleaning material.
(c) Specify tools and/or equipment required for the particular inspection, i.e., Torque wrench, Hydraulic unit, etc.

(4) The Inspection should include:
(a) Locate the item(s) to be inspected.
(b) Identify what the inspector should be inspecting for (security, wear, damage, corrosion, etc.)
(c) Instructions specified for that inspection.
(d) Using the required Inspection techniques.
(e) Using tools and equipment specified for that inspection.
(f) Determine that the item(s) being inspected meet the airworthiness standard established for that product or appliance.
(g) Recording of inspection findings.
 # NOTE: Most of the above information is normally contained in an inspection form which inspection personnel could copy and use.

(5) Type of action to be taken when inspected item is unsatisfactory.

(6 Post Inspection actions such as:
(a) Application of protective coatings removed for inspection.
(b) Servicing and lubrication requirements
(c) Installation of cowling, panels, plates and covers removed for inspection.
(d) Post inspection run up and system operation.
(e) Maintenance record entry.

(MANUAL IDENTIFICATION)

CHAPTER 5
INSPECTION REQUIREMENTS AND OVERHAUL SCHEDULE
(continued)

f. If applicable this chapter should include any Special Inspection Techniques such as:
(1) Radiographic
(2) Ultrasonic

g. Inspection interval extension statement in the ICA is not acceptable to the FAA. For those airworthiness authorities that allow extensions, the following statement should be included in this chapter:

"Inspection interval extension may be used if approved by the airworthiness authority."

2. COMPONENT OVERHAUL SCHEDULE

a. *The ICA must include:*

(1) The recommended overhaul periods.

(2) Necessary cross-references to the Airworthiness Limitations Section. Reference Appendix A, A27.3 (b)(1).

b. The Component Overhaul Schedule normally includes:
(1) Component's Part Number.
(2) Component's Nomenclature.
(3) Time Between Overhaul Interval in Hours or Calendar time.

c. Notes may be used to provide information about the requirements.

3. NO OVERHAUL REQUIREMENTS

a. When there are no overhaul requirements, the following statement should be included in Chapter 5 of the ICA.

"No component overhaul required for this type design."

4. INSPECTION EXAMPLE

a. To assist in preparing an inspection program, an Inspection Example is provided on the next page. We recommend making the Inspection Example an Appendix and last page of the ICA, so maintenance personnel can copy the Inspection Program, add the STC inspection to the rotorcraft's inspections, and use it to inspect the appliance.

(MANUAL IDENTIFICATION)

INSPECTION EXAMPLE: 100-Hour Inspection

N_____ Serial Number _____ Aircraft Hours_____ Total Time _____

The 100-Hour Inspection shall be accomplished each 100 hours time-in-service.
Initial each item after accomplishing the inspection.
Record all findings and attach a copy to this inspection form.
After correction of all findings, make maintenance record entry.

PRE-INSPECTION INITIAL EACH ITEM AFTER ACCOMPLISHMENT	INITIAL
1. *Describe pre-inspection actions* Example: 1. Review Rotorcraft and Engine Maintenance Records.	
Example: 2. Review Airworthiness Directives.	

MAINTENANCE PRACTICES INITIAL EACH ITEM AFTER ACCOMPLISHMENT	INITIAL
1. *Describe access panel to be removed and door to be opened.*	
Example: 1. Remove access panel P3, P4, P5, P6, P7, P8, D1, D5, D10, D15 etc.	
2. *Describe maintenance action required to accomplish the inspection.*	
Example: 1. Clean (appliance) using Arro ACR-223 solvent.	
Example: 2 Lubricate (appliance) in accordance with Chapter 12.	
3. Describe Special tool and equipment required for the inspection.	
Example: 1. Place jacks under helicopter and jack up aircraft.	
Example: 2. Use a 10-power magnifying glass and bright light required for inspection.	

INSPECTION INITIAL EACH ITEM AFTER ACCOMPLISHMENT	INITIAL
1. Describe the item being inspected, its location, and what the item is being inspected for. Provide any special instructions or technique to be used, identify special tool required, and provide information on the standard that the item should meet. Example: **1. (Appliance)** Inspect (appliance) for cleanliness, corrosion and security.	
Example: **2. (Appliance)** Inspect (appliance) for scratches, dent, delamination and cracks. Cracks up to .040 may be repaired. Appliance with cracks longer than .040 part should be replaced.	
Example: **3. (Appliance)** Inspect (appliance) for due dates and expiration.	
Example: **4. (Appliance)** Inspect (appliance) for security, lack of lubrication, and freedom of movement, and wear. Acceptable wear is .003 to .005.	
Example: **5. (Appliance)** Inspect (Appliance) attachment nuts for correct torque. Set torque wrench to 22-inch lbs. and torque nut. If nut moves, replace (appliance).	
Example: **6. (Appliance)** Inspect (Appliance) for correct operations, etc.	

POST INSPECTION INITIAL EACH ITEM AFTER ACCOMPLISHMENT	INITIAL
Describe post actions such as protective coating, servicing or lubrication appliances, installation of access panels and doors, run up and system operations.	
Example: 1 Complete maintenance practices for the inspection, i.e., install access panels and close doors opened for the inspection, remove aircraft form jacks, etc.	
Example: 2 Perform run up or system operation and verify correct function and operation.	
Example: 3 Complete and sign aircraft's maintenance record entry	

Mechanic Name _____ Signature_____ # _____
Inspector Name _____ Signature_____ # _____

REVISION: ***(PAGE NUMBER)***
Revision 4 *05-00-00 Page 4*

(MANUAL IDENTIFICATION)

CHAPTER 6
DIMENSIONS AND ACCESS

1. AN EXPLANATION OF THE ROTORCRAFT FEATURES

a. The ICA must include the features of the rotorcraft.
Reference Appendix A, A27.3 (a)(1).

b. The dimensions are part of the rotorcraft's features and normally include:
(1) Principal dimensions of the rotorcraft.
(2) Dimensions of the rotorcraft.
(a) Exterior dimensions.
(b) Interior dimensions.
(3) Layout of the rotorcraft.
(4) Divisions of the structure - zones and zonal groups.
(5) Airframe reference lines.
(a) Stations lines.
(b) Water Lines.
(c) Buttocks Lines.

2. LOCATION OF ACCESS PANELS

a. *The ICA must include the location of access panels for inspection and servicing.*
Reference Appendix A, A27.3 (a)(4).

b. Access information normally includes:
(1) Descriptions of access panel, plates, doors and cowlings.
(2) Location of access panels plates, doors, and cowlings.
(3) Procedure for removing and installing access panels and doors.
(4) Figures showing dimensions and locations of access panels and doors.

c. To prevent removal of all access panels, plates, doors, and cowling for each inspection, the access panels, plates, doors, and cowling should be identified. Only those identified would need to be removed for each inspection. The use of a figure to identify those access panels, plates, doors, and cowling is recommended.

3. DIAGRAM OF STRUCTURAL ACCESS PLATES AND INFORMATION NEEDED TO GAIN ACCESS FOR INSPECTION WHEN ACCESS PLATES ARE NOT PROVIDED.

a. The ICA must include structural access plate information.
Reference Appendix A, A27.3 (c).

b. If applicable, the ICA should identify those structural access plates.

THIS PAGE INTENTIONALLY LEFT BLANK

(MANUAL IDENTIFICATION)

CHAPTER 7
LIFTING AND SHORING

1. LIFTING. ***The ICA must include instructions including procedures for lifting. Lifting instructions are divided in two areas - jacking information and lifting instructions. Reference Appendix A, A27.3 (b)(4).***

a. JACKING INFORMATION

(1) ***The ICA must include information for jacking.***

(2) Jacking information normally includes:
(a) A description of the jacking system.
(b) Location of jack pads.
(c) Procedure for installing and removing jack pads.
(d) Procedure for installation and removal special fixtures.
(e) Specify special tools and equipment required for jacking.
(f) The minimum capacity of the jacks required.
(g) Procedure for jacking includes: action to be accomplished before jacking, the order and method of jacking helicopter, and actions to be accomplished after jacking.
(h) Precautions to be taken.

b. LIFTING INSTRUCTIONS

(1) ***The ICA must include instructions for lifting.***

(2) Lifting instructions normally include:
(a) A description of the lifting system.
(b) Location of hoist attachments
(c) Procedure for installing and removing lifting tools and equipment
(d) Special tools and equipment required for lifting.
(e) The minimum capacity of the lifting equipment.
(f) Procedure for lifting includes: actions to be accomplished before lifting, the order and method of lifting the helicopter, and actions to be accomplished after lifting.
(g) Precautions to be taken.

2. SHORING INSTRUCTIONS

a. ***The ICA must include instructions including*** **procedures for shoring.** ***Reference Appendix A, A27.3 (b)(4) .***

b. Shoring instructions normally include:
(1) A description of the task to be accomplished prior to shoring the rotorcraft.
(2) A description of the order and method of shoring the rotorcraft.
(3) Special procedures to be used during shoring of the rotorcraft.
(4) Specify precautions to be used during shoring of the rotorcraft.
(5) Specify tool(s), special tool(s), or equipment required for shoring.

THIS PAGE INTENTIONALLY LEFT BLANK

(MANUAL IDENTIFICATION)

CHAPTER 8
LEVELING AND WEIGHING

1. LEVELING INFORMATION

a. *The ICA must include leveling information. Reference Appendix A, A27.3 (a)(4).*

b. Leveling information normally includes:

(1) A description of the leveling system.
(2) Location(s) of the leveling points.
(3) Procedure for installation and removal of special fixtures required for leveling.
(4) Description of the fixtures and their location.
(5) Special tools and equipment required for leveling.
(6) Procedure for leveling including: actions required before leveling; the order and method of leveling the helicopter; and actions required after leveling.
(7) Any precaution to be taken.

2. WEIGHING AND DETERMINING THE CENTER OF GRAVITY INSTRUCTIONS

a. *The ICA must include weighing and determining center of gravity instructions. Reference Appendix A, A27.3 (a)(4).*

b. Weighing and determining the center of gravity instructions should include:

(1) A description of the weighing system.
(2) Location(s) of the weighing points.
(3) Special tools or equipment required for weighing.
(4) Procedure for weighing includes actions to be taken before weighing, the order and method of weighing the helicopter, and actions to be taken after weighing.
(5) Procedure for determining the basic weight and center of gravity.
(6) Samples of weighing forms.
(7) Any precautions to be taken.

c. When a TDC is made and the weight and balance procedure in the rotorcraft maintenance manual will not change, the applicant needs only provide for each product or appliance the weight, and location (arm).

d. The use of a table is recommended.

THIS PAGE INTENTIONALLY LEFT BLANK

(MANUAL IDENTIFICATION)

CHAPTER 9
TOWING AND TAXIING

1. TOW INSTRUCTIONS

a. The ICA must include tow instructions and limitations.
Reference Appendix A, A27.3 (a)(4).

b. Tow instructions normally include:
(1) A description of the landing gear (skids type or wheel type).
(2) A description of the towing devices.
(3) Procedures for installation and removal of ground handling wheels and towing devices.
(4) Procedures for towing and maneuvering.
(5) Towing limitations, including speed, turning radius, and clearance requirements.
(6) Precautions to be taken while towing.

2. TAXIING INSTRUCTIONS

a. The ICA must include basic control and operating information.
Reference Appendix A, A27.3 (a)(3).

b. Taxiing instructions normally include:
(1) A description of the controls required to taxi the rotorcraft.
(2) A procedure for starting and taxiing the rotorcraft.
(3) Taxi limitation - speed turning radius and clearance requirements.
(4) Precautions to be taken.

THIS PAGE INTENTIONALLY LEFT BLANK

(MANUAL IDENTIFICATION)

CHAPTER 10
PARKING AND MOORING

1. MOORING INFORMATION

a. *The ICA must include mooring information. Reference Appendix A, A27.3 (a)(4).*

b. Mooring information normally includes:
(1) A description of mooring points and fittings.
(2) Location of mooring points and fittings.
(3) Procedures for removing and installing fairings.
(4) Procedures for installing and removing mooring fittings.
(5) Procedures for mooring rotorcraft in standard and rough weather.
(6) Procedures for mooring rotorcraft on land or on a ship.
(7) Limitations associated with mooring.
(8) Precautions to be taken while mooring the rotorcraft.

c. Figures may be used to describe mooring points, fitting locations, and limitations.

2. PARKING INFORMATION

a. *The FAR/JAR do not require parking information. It is recommended that parking information be included.*

b. Parking information normally includes:
(1) A description of the controls required to park the rotorcraft.
(2) A procedure for parking the rotorcraft.
(3) Equipment required for parking.
(4) Parking limitation: slope and clearance requirements.
(5) Precautions to be taken during parking.

3. STORAGE LIMITATIONS

a. *The ICA must include storage limitations. Reference Appendix A, A27.3 (b)(4).*

b. Only storage limitations are required, but storage information normally includes:
(1) Type of storage: short term, long term.
(2) Storage environments: desert, salt air, cold weather, etc..
(3) Identification of parts and system which should be preserved during storage.
(4) A description of order and method of preparing the rotorcraft for storage.
(5) Storage limitations.
(6) Procedures for installing and removing covers.
(7) Procedures for interim maintenance or inspection task of the rotorcraft during storage.
(8) Procedures for preparing the rotorcraft for operations after storage.
(9) Precautions to be taken while storing the rotorcraft.

THIS PAGE INTENTIONALLY LEFT BLANK

(MANUAL IDENTIFICATION)

CHAPTER 11
PLACARDS AND MARKINGS

1. PLACARD AND MARKING INFORMATION

a. Although there is no requirement for placards or markings to be in the Instructions for Continued Airworthiness (ICA), placards and markings for the rotorcraft are part of the type design of the rotorcraft and are contained in type design drawing.

b. The placards and markings information normally include:

(1) General information about placards and markings.
(2) Index of exterior placards and markings.
(3) Index of interior placards and markings.
(4) Location of placards and markings.
(5) A procedure for installing and removing placards and markings.
(6) Figures may be used to show placards and markings, and their location.

c. *Maintenance personnel are required to ensure the rotorcraft meets its type design. To accomplish this, maintenance personnel need to know what placard and markings are required to be on the rotorcraft; therefore, the information on placards and markings should be in the Instructions for Continued Airworthiness.*

THIS PAGE INTENTIONALLY LEFT BLANK

(MANUAL IDENTIFICATION)

CHAPTER 12
SERVICING

1. SERVICING *INFORMATION*

a. *The ICA must include servicing information. Reference Appendix A, A27.3 (a)(4).*

b. Servicing Information

(1) Servicing information covers details regarding servicing points, capacities of tanks and reservoirs, types of fluids to be used, and pressures applicable to the various systems.

(2) Servicing information normally includes:

(a) Information applying to fuel system and to other systems if ICA describe other tanks. If the tank capacity is not on the tank, the location of the information should be provided.

(b) The type of fluid, specification, and name of fluid identification number. Figures and tables may be used for fluid identification.

2. LUBRICATION INFORMATION

a. Lubrication information covers details regarding locations of lubrication points and the type of lubricants to be used.

b. Lubrication information normally includes the type of lubricant, specification, name of lubricant, identification number, and precautions to be taken. Figures and tables may be used to identify lubricants.

3. EQUIPMENT REQUIRED FOR SERVICING

a. The ICA must include the equipment required for servicing.

b. *Service information normally includes information on the equipment required for servicing, lubricating, draining, and pressurizing the applicable systems installed in the rotorcraft. These systems could include fuel system, engine oil system, gearbox oil system, hydraulic system, landing gear system, battery, rotor system, rotor drive, tires, etc. This equipment should be included in the List of Special Tools.*

4. CONSUMABLE MATERIALS

The ICA must include the types of fluids to be used, types of lubricant to be used, and any storage limitations.

THIS PAGE INTENTIONALLY LEFT BLANK

(MANUAL IDENTIFICATION)

CHAPTERS 20, 51, 60, 70
STANDARD PRACTICES

1. STANDARD PRACTICES

a. Chapters that contain standard practices are:

Chapter 20, Airframe Standard Practices 20-00-00
Chapter 51, Structures Standard Practices 51-00-00
Chapter 60, Rotor Standard Practices 60-00-00
Chapter 70, Powerplant Standard Practices 70-00-00

b. There are no specific requirements for a Standard Practices Chapter.

2. STANDARD PRACTICES INFORMATION. Standard practices information normally includes the following:

(a) General Maintenance Procedure.
(b) Information on Standard Hardware.
(c) Tightening Procedure.
(d) Torque Value and Torquing Procedures.
(e) Use of Torque Wrench.
(f) Safety Methods.
(g) Other Subjects.

(MANUAL IDENTIFICATION)

THIS PAGE INTENTIONALLY LEFT BLANK

(MANUAL IDENTIFICATION)

CHAPTERS
21, 22, 23, 24, 25, 26, 27, 29, 30, 31, 32, 33, 34, 35, 36, 37, 45,
49; Airframe Systems ( )-00-00
52, 53, 54, 55, 56, Structures ( )-00-00
62, 63, 64, 65, 66, 67; Rotors ( )-00-00
71, 72, 73, 74, 75, 76, 77, 78, 79, 80, and 83. Powerplant ( )-00-00

REQUIREMENTS

The applicant must review requirements for each chapter, determine items that are applicable, and prepare appropriate ICA.

1. INTERFACE INFORMATION

Any required information relating to the interface of appliances, engine or engines, rotor or rotors with the rotorcraft. Reference Appendix A, A27.1 (b). *This is required when appliances, engine or engines, and rotor or rotors are mounted, attached, or connected to rotorcraft. Applicant should provide information relating to the installation. Interface information should include the system(s) from which it receives electrical power, fluids (fuel, oil, hydraulic, etc.), indications, and the controls that interface with rotorcraft.*

2. DESCRIPTION OF ROTORCRAFT AND ITS SYSTEMS AND INSTALLATIONS

A description of the rotorcraft and its systems and installations.
Reference Appendix A, A27.3 (a)(2). *This is always required as applicable.*

a. The description of the rotorcraft should include the type of rotorcraft (passenger, cargo), type of structure (metal, composite), number of rotors, number of engines, and type of landing gear (retractable or skids)

b. The description of the rotorcraft's systems should include the component or parts of the system and how systems interface with the rotorcraft or other systems.

c. The description of the installations should include the location of the installation, and how the system is installed.

3. DESCRIPTION OF ROTORCRAFT'S ENGINE(S)

A description of the rotorcraft's engine(s) and its systems and installations. Reference Appendix A, A27.3 (a)(2). *This is always required as applicable.*

a. The description of the engine should include the type (piston or turbine), the manufacturer, engine model, horsepower, etc.

(MANUAL IDENTIFICATION)

REQUIREMENTS
(continued)

b. The description of the engine's systems should include the component or parts of the system and how systems interface with the rotorcraft or other systems.

c. The description of the engine installations should include the location of the installation and how the system is installed.

4. DESCRIPTION OF ROTORCRAFT'S ROTOR(S)

A description of the rotorcraft's rotor(s) and its systems and installations. Reference Appendix A, A27.3 (a)(2). *This is always required as applicable.*

a. The description of the rotors should include the type (two blade or more), structural (metal or composite), the rotor manufacturer, rotor model, dimensions, etc.

b. The description of the rotor systems should include the component or parts of the system and how systems interface with the rotorcraft or other systems.

c. The description of the rotor installations should include the location of the installation and how the system is installed.

***5.* DESCRIPTION OF ROTORCRAFT'S APPLIANCES**

A description of the rotorcraft's appliances and its systems and installations. Reference Appendix A, A27.3 (a)(2). *This is always required as applicable.*

a. The description of the appliances should include the type of appliance, the manufacturer, model, and identification, etc.

b. The description of the appliance systems should include the component or parts of the system and how systems interface with the rotorcraft or other systems.

c. The description of the appliance installations should include the location of the installation and how the system is installed.

6. BASIC CONTROL AND OPERATING INFORMATION

Basic control and operating information describing:

a. How the rotorcraft components and systems are controlled.

b. How the rotorcraft components and systems are operated.

REQUIREMENTS
(Continued)

c. Any special procedures and limitations that apply.
Reference Appendix A, A27.3 (a)(3). *This is required if engine(s), rotor(s), and/or appliances require controlling or operating.*

d. The information should identify the appliance or component and should identify the control(s) and system used to control the appliance or component.

e. The ICA should provide instructions on operating the appliance or component and any limitation or precautions. Operations information can be found in the Rotorcraft Flight Manual or Pilot Operating Handbook. However basic control and operating information is an Appendix A requirement and should be contained in the ICA.

7. SERVICING INFORMATION

Servicing information that covers details regarding:

a. Servicing points and their locations.

b. Types of fluids to be used.

c. Capacities of tanks and reservoirs.

d. Pressures applicable to the various systems.
Reference Appendix A, A27.3 (a)(4). *This is required when applicant determines the rotorcraft and its engine(s), rotor(s), and appliances will require servicing. The information is normally included in chapters that address servicing and in Chapter 12.*

8. LOCATION OF ACCESS PANELS

Location of access panels for inspection and servicing.
Reference Appendix A, A27.3 (a)(4). *This is required when panels, plates, fairing, cowling, etc. should be removed to provide access to the rotorcraft, its engine(s), rotor(s), and appliances for inspection and servicing. This information is normally included in chapters that address access and in Chapters 6 and 12.*

9. LUBRICATING INFORMATION

Lubricating information that covers details regarding:

a. Lubrication points and their location.

(MANUAL IDENTIFICATION)

REQUIREMENTS
(Continued)

b. Types of lubricants to be used.
Reference Appendix A, A27.3 (a)(4). *This is required when applicant determines the rotorcraft and its engine(s), rotor(s), and appliances will require lubrication. The information is normally included in chapters that address lubrication and in Chapter 12.*

10. EQUIPMENT REQUIRED FOR SERVICING

Equipment required for servicing and lubricating. Reference Appendix A, A27.3 (a)(4). *This is required when applicant determines equipment will be required for servicing and lubricating the rotorcraft and its engine(s), rotor(s), and appliances. The information is normally included in chapters addressing equipment for servicing or lubrication and in Chapter 12. In addition, the equipment required for servicing and lubricating should be listed in the List of Special Tools contained in Chapter 1.*

11. RECOMMENDED PERIODS

The recommended period at which each part of the rotorcraft and its engine(s), auxiliary power unit, rotor(s), accessories, instruments, and equipment should be:

a. Cleaned.

b. Inspected.

c. Adjusted.

d. Tested.

e. Lubricated.
Reference Appendix A, A27.3 (b)(1). *This is always required as applicable.*

f. There is not a specific format for the recommended periods, however the ICA should include the time and/or interval the above items are to be accomplished.

12. DEGREE OF THE INSPECTION

The degree (scope) of the inspection for each part of the rotorcraft and its engine(s), auxiliary power unit, rotor(s), accessories, instruments and equipment. Reference Appendix A, A27.3 (b)(1). *It is required for each part of the rotorcraft and its engine(s), auxiliary power unit, rotor(s), accessories, instruments, and equipment which is required to be inspected. This information is normally contained in the chapters of the item being inspected and Chapter 5.*

(MANUAL IDENTIFICATION)

REQUIREMENTS
(Continued)

13. WORK RECOMMENDED

The work recommended at these periods when each path of the rotorcraft was cleaned, inspected, adjusted, tested, and lubricated. Reference Appendix A, A27.3 (b)(1). *This is required when applicant determines that work will be recommended for that part of the rotorcraft at that period. When maintenance tasks are associated with cleaning, inspecting, adjusting, testing or lubrication of each part of the rotorcraft and its engine(s), auxiliary power unit, rotor(s), accessories, instruments and equipment, then those tasks should be included in the ICA. This information is normally contained in the chapters that the work is required.*

14. APPLICABLE WEAR TOLERANCES

The applicable wear tolerances. Reference Appendix A, A27.3 (b)(1). *This is required when applicant determines that wear tolerances will be required for the rotorcraft, its engine(s), rotor(s), and appliances. When a procedure requires maintenance personnel to determine whether the item being inspected or maintained meets a standard, the ICA should include the standard and specify how much wear is acceptable. The tolerances are normally contained in the chapter addressing the tolerance.*

15. TROUBLESHOOTING

Troubleshooting information describing:

a. Probable malfunctions.

b. How to recognize those malfunctions. (Probable Cause). *Some malfunctions could be identified on the basis of a baseline vibration signature provided as follows in the maintenance manual:*

The baseline vibration characteristics of the basic aircraft configuration to be used for maintenance or trouble shooting purposes should be provided as the vibratory aircraft reference in the maintenance manual. These characteristics should be given for specified loading and flight conditions (speed, altitude) with vibration pickups at specified airframe locations decided by the manufacturer. The characteristics should be given as a typical range of vibration levels at these locations and for the most representative frequencies and directions for the rotorcraft concerned (N omega main rotor and n omega tail rotor...). The manufacturers and operators should keep the basic vibration data updated from field/service experience.

c. The remedial (corrective) action for those malfunctions.
Reference Appendix A, A27.3 (b)(2). *This is required when applicant determines the rotorcraft, its engine(s), rotor(s), and appliances require troubleshooting.*

d. The use of a table is recommended. A sample is shown below

Malfunction	*Probable Cause*	*Corrective Action*
Describe the malfunction.	*List all probable causes of the malfunction.*	*Provide a corrective action for all probable causes.*

e. Troubleshooting information is normally contained in the chapters where troubleshooting is required.

REVISION: **(*PAGE NUMBER*)**
Revision 3 *( )-00-00 Page 5*

(MANUAL IDENTIFICATION)

REQUIREMENTS
(Continued)

16. ORDER AND METHOD OF REMOVAL

Information describing the order and method of removal of products and parts with any necessary precautions to be taken. Reference Appendix A, A27.3 (b)(3). *This is required when products and parts can be removed as part of maintenance. This includes the removal of products and parts in conjunction with a repair.*

a. The order is a step-by-step procedure: what is the first thing you do, then what is next, until the product or part is removed.

b. The method is the procedure or process used to remove the product or part. If the removal of a product or part could result in injury to personnel or damage to the rotorcraft if not done correctly, the ICA should include precaution. See Chapter1, Paragraph 13.

c. The information is normally contained in the chapters requiring removal of the product or part.

17. ORDER AND METHOD OF REPLACING

Information describing the order and method of replacing products and parts with any necessary precautions to be taken. Reference Appendix A, A27.3 (b)(3). *This is required when products and parts can be replaced.*

a. The order is a step by step procedure, what is the first thing you do, then what is next until the product or part is replaced (reinstalled).

b. The method is the procedure or process used to replace (reinstall) the product or part. If the replacement of a product or part could result in injury to personnel or damage to the rotorcraft if not done correctly, the ICA should include precaution. See Chapter1 Paragraph 13.

c. The use of the phrase "Install in reverse order" does not meet the requirements of the FAR/JAR and should not be used in the ICA.

d. The information is normally contained in the chapters requiring replacement of the part.

18. GENERAL PROCEDURAL INSTRUCTIONS -TESTING

General procedural instructions including procedures for system testing during ground run. Reference Appendix A, A27.3 (b)(4). *This is required when system testing during ground run is specified. The information is normally contained in the chapters requiring the test, or applicant may have a section for special inspections, tests, and checks.*

19. GENERAL PROCEDURAL INSTRUCTIONS – CHECKS

General procedural instructions including procedures for symmetry checks. Reference Appendix A, A27.3 (b)(4). *This is required when applicant specifies that symmetry checks are required. The information is normally contained in the chapters addressing the symmetry checks, or applicant may have a section for special inspections, tests, and checks.*

20. STORAGE LIMITATIONS

Storage Limitations. Reference Appendix A, A27.3 (b)(3). *This is required when the rotorcraft, engine, appliance manufacturer, or consumable materials manufacturer determines there is a storage limitation.*

a. There are various storage limitations. The applicant needs to identify those storage limitations, provide procedure for storage and a means to ensure the storage limitations are not exceeded.

b. The information is normally contained in the chapter specifying the storage.

21. SPECIAL INSPECTION TECHNIQUES. Details for the application of special inspection techniques including radiographic and ultrasonic testing where such processes are required. Reference Appendix A, A27.3 (d). *This is required when applicant specifies special inspection techniques will be required.*

a. The ICA should include the equipment required for the special inspection.

b. *The ICA should include the procedure for conducting tests, including any precautions. See Chapter 1, Paragraph 13.*

c. The information is normally contained in the chapters requiring special inspection techniques, or the applicant may have a section for special inspections, tests, and checks.

22. PROTECTIVE TREATMENT

Information needed to apply protective treatment to a structure after inspection. Reference Appendix A, A27.3 (e). *This is required when applicant determines protective treatment will be required for structure.*

a. The ICA should include procedures for applying protective treatment.

b. The ICA should specify type of materials to be used.

c. The ICA should include the precautions associated with the protective treatment.

***REQUIREMENTS* (continued)**

d. The information is normally contained in the chapters that require the treatment.

23. STRUCTURAL FASTENERS

Information relative to structural fasteners such as identification of structural fasteners, structural fasteners discard recommendations, and torque values. Reference Appendix A, A27.3 (f). *This is required when structural fasteners are used and torque values are required.*

a. The ICA should identify all structural fasteners i.e. rivets, screws, bolts or others.

b. The ICA should specify the requirements for discarding structural fasteners

c. When a structural fastener is required to be torqued, the ICA should contain those specific torques and the procedure to torque the structural fastener.

d. Torque values must be specific and in United States or Metric Standards .

e. The information is normally contained in the chapters specifying structural fasteners and torque values.

24. SPECIAL TOOLS

A List of Special Tools. Reference Appendix A, A27.3 (g). *This is required when special tools or equipment are specified in the chapters of the ICA.*

a. When a procedure in the ICA requires the use of a special tool(s) that tool should be listed in the List of Special Tools.

b. The List of Special Tools is normally contained in the Introduction.

(MANUAL IDENTIFICATION)

ATTACHMENT 1
PART 27 REQUIREMENTS

The following is a breakdown of Appendix A to FAR/JAR Part 27 and is intended to provide guidance to assist an applicant for a Type Design Change under a Type Certificate (TC), Supplemental Type Certificate (STC), or Field Approval (FA) requiring Instructions for Continued Airworthiness (ICA). This breakdown is intended to provide guidance to assist an applicant in understanding the ICA requirements of § 27.1529. An applicant may use the guidance to prepare the ICA. Completion of this appendix will provide information needed for the evaluation and will reduce the time required for evaluation of the proposed ICA. The open parentheses ( ) in the Requirement Column indicates the status of ICA Requirements: Y = applicable; N/A = non-applicable. In the Location Column, list the page number in the Applicant's ICA that contains the information.

Project Number(s) _____ _____ _____

ACO/FSDO_____ Project Engineer _____

Applicant_____ Make_____ Model_____ Date_____

Requirement	Regulation	Location
( ) ICA for each engine	***A27.1(b)***	
( ) ICA for each rotor	***A27.1(b)***	
( ) ICA for each appliance required by this chapter	***A27.1(b)***	
( ) Any required information relating to the interface of the ( ) appliances, ( ) engines and ( ) rotors with the rotorcraft.	***A27.1(b)***	
( ) If ICA are not supplied by the manufacturer of an ( ) appliance, ( ) engine or ( ) rotor installed in the rotorcraft, the ICA for the rotorcraft must include ( ) the information essential to the continued airworthiness of the rotorcraft.	***A27.1***	
( ) A program showing how changes to the applicant's ICA will be distributed.	***A27.1(c)***	
( ) A program showing how changes to the ICA of the manufacture of the engine(s), rotor(s) and appliances installed in the rotorcraft will be distributed, if referenced in applicant's ICA	***A27.1(c)***	
( ) ICA that must be in a form of a manual or manuals as appropriate for the quantity of data.	***A27.2(a)***	
( ) A format of the manual or manuals which must provide for a practical arrangement.	***A27.2(b)***	
( ) Content prepared in the English language.	***A27.3***	
( ) Introduction information that includes ( ) an explanation of the rotorcraft's features and ( ) data to the extent necessary for maintenance and preventive maintenance.	***A27.3(a)(1)***	

FIGURE 1

(MANUAL IDENTIFICATION)

ATTACHMENT 1
PART 27 REQUIREMENTS

Requirement	Regulation	Location
( ) A description of the ( ) rotorcraft and its systems and installations, ( ) engines and its systems and installations, ( ) rotors and its systems and installations, and ( ) appliances and its systems and installations.	***A27.3(a)(2)***	
( ) Basic control and operating information describing ( ) how the rotorcraft components and systems are controlled and ( ) how the rotorcraft components and systems are operated including ( ) any special procedure and limitations.	***A27.3(a)(3)***	
( ) Servicing information that covers details regarding ( ) servicing points, ( ) capacities of tanks, ( ) capacities of reservoirs, ( ) types of fluids to be used, and ( ) pressures applicable to the various systems.	***A27.3(a)(4)***	
( ) Location of access panels for ( ) inspection and ( ) servicing.	***A27.3 (a)(4)***	
( ) Servicing information that covers details regarding ( ) locations of lubrication points, and ( ) the lubricant to be used.	***A27.3(a)(4)***	
( ) Equipment required for servicing.	***A27.3(a)(4)***	
( ) Tow instructions and limitations.	***A27.3(a)(4)***	
( ) Mooring information	***A27.3(a)(4)***	
( ) Jacking information	***A27.3(a)(4)***	
( ) Leveling information	***A27.3(a)(4)***	
( ) Scheduling information for each part of the ( ) rotorcraft that, provides the recommended periods at which they should be ( ) cleaned, ( ) inspected, ( ) adjusted, ( ) tested, ( ) lubricated and ( ) the work recommended at these periods.	***A27.3(b)(1)***	
( ) Scheduling information for the ( ) rotorcraft's engine(s) that provides the recommended periods at which they should be ( ) cleaned, ( ) inspected, ( ) adjusted, ( ) tested, ( ) lubricated and ( ) the work recommended at these periods. NOTE: This information may be in the FAA/AUTHORITY-accepted engine ICA.	***A27.3(b)(1)***	
( ) Scheduling information for the ( ) rotorcraft's auxiliary power unit(s)(APU) that provides the recommended periods at which they should be ( ) cleaned, ( ) inspected, ( ) adjusted, ( ) tested, ( ) lubricated, and ( ) the work recommended at these periods.	***A27.3(b)(1)***	

Figure 1 (continued)

(MANUAL IDENTIFICATION)

ATTACHMENT 1
PART 27 REQUIREMENTS

Requirement	Regulation	Location
( ) Scheduling information for the ( ) rotorcraft's rotor(s) that provides the recommended periods at which they should be ( ) cleaned, ( ) inspected, ( ) adjusted, ( ) tested, ( ) lubricated, and ( ) the work recommended at these periods.	***A27.3(b)(1)***	
( ) Scheduling information for the ( ) rotorcraft's accessories that provides the recommended periods at which they should be ( ) cleaned, ( ) inspected, ( ) adjusted, ( ) tested, ( ) lubricated, and ( ) the work recommended at these periods.	***A27.3(b)(1)***	
( ) Scheduling information for the ( ) rotorcraft's instruments that provides the recommended periods at which they should be ( ) cleaned, ( ) inspected, ( ) adjusted, ( ) tested, ( ) lubricated, and ( ) the work recommended at these periods.	***A27.3(b)(1)***	
( ) Scheduling information for the ( ) rotorcraft's equipment that provides the recommended periods at which they should ( ) cleaned, ( ) inspected, ( ) adjusted, ( ) tested, ( ) lubricated, and ( ) the work recommended at these periods.	***A27.3(b)(1)***	
( ) The degree of inspection for each part of the ( ) rotorcraft and its ( ) engine(s), ( ) auxiliary power unit, ( ) rotor(s), ( ) accessories, ( ) Instruments, and ( ) equipment.	***A27.3(b)(1)***	
( ) The applicable wear tolerances	***A27.3(b)(1)***	
The applicant may refer to an ( )accessory, ( ) instrument, or ( ) equipment manufacturer as the source of this information if the applicant shows ( ) that the item has an exceptionally high degree of complexity requiring specialized maintenance techniques, test equipment, or expertise.	***A27.3(b)(1)***	
( ) The recommended overhaul periods and necessary cross references to the Airworthiness Limitation Section.	***A27.3(b)(1)***	
( ) An inspection program that includes ( ) the frequency and ( ) extent of the inspection necessary to provide for the continued airworthiness of the rotorcraft.	***A27.3(b)(1)***	
( ) Troubleshooting information describing ( ) problem malfunctions, ( ) how to recognize those malfunctions, and ( ) the remedial action for those malfunctions.	***A27.3(b)(2)***	
( ) Information describing the order and method of ( ) removing and ( ) replacing engine(s) with any necessary precautions to be taken.	***A27.3(b)(3)***	

Figure 1 (continued)

(MANUAL IDENTIFICATION)

ATTACHMENT 1
PART 27 REQUIREMENTS

Requirement	Regulation	Location
( ) Information describing the order and method of ( ) removing and ( ) replacing rotor(s) with any necessary precautions to be taken.	***A27.3(b)(3)***	
( ) Information describing the order and method of ( ) removing and ( ) replacing parts with any necessary precautions to be taken.	***A27.3(b)(3)***	
( ) Other general procedural instructions including ( ) storage limitations and procedures for ( ) testing system during ground running, ( ) making symmetry checks, ( ) weighing and determining the center of gravity, ( ) lifting, and ( ) shoring.	***A27.3(b)(4)***	
( ) Diagrams of structural access plates and information needed to gain access for inspections when access plates are not provided.	***A27.3(c)***	
( ) Details for the application of special inspection techniques including radiographic and ultrasonic testing where such processes are specified.	***A27.3(d)***	
( ) Information needed to apply projective treatment to structure after inspection.	***A27.3(e)***	
( ) All data relative to structural fasteners such as ( ) identification, ( ) discarded recommendations, and ( ) torque values.	***A27.3(f)***	
( ) A list of special tools needed	***A27.3(g)***	
( ) The Instructions for Continued Airworthiness must contain a section, titled Airworthiness Limitations that is ( ) segregated and ( ) clearly distinguishable from the rest of the document. NOTE: *The Airworthiness Limitations Section in the applicant's ICA will be evaluated by the appropriate FAA/AUTHORTY.*	***A27.4***	
( ) The Airworthiness Limitations Section must set forth each mandatory replacement time, structural inspection procedure approved under § 27.571.	***A27.4***	
( ) If the Instructions for Continued Airworthiness consist of multiple documents, the Airworthiness Limitations Section required by this paragraph must include in the principal manual.	***A27.4***	

Figure 1 (continued)

(MANUAL IDENTIFICATION)

ATTACHMENT 1
PART 27 REQUIREMENTS

Requirement	Regulation	Location
( ) The Airworthiness Limitations Section must contain a legible statement in a prominent location indicating that the Airworthiness Limitations Section is FAA/AUTHORITY-approved and specifies required maintenance and/or inspections. The exact, required wording of this statement is found in the FAR/JAR.	***A27.4***	

Figure 1 (continued)

NOTE: The Airworthiness Limitations Section (ALS) is evaluated and approved by the FAA/AUTHORITY. The applicant's proposed ICA is submitted to the FAA/AUTHORITY.

(MANUAL IDENTIFICATION)

THIS PAGE INTENTIONALLY LEFT BLANK

(MANUAL IDENTIFICATION)

ATTACHMENT 2
INSTRUCTIONS FOR CONTINUED AIRWORTHINESS
PROCEDURES INFORMATION

The procedures information in this appendix is not a requirement. It is intended as guidance to assist the applicant in preparing procedures for Instructions for Continued Airworthiness (ICA).

An ICA is required when field maintenance personnel are authorized to remove, disassemble, assemble, clean, inspect, check, repair, replace, install, service, lubricate, test, troubleshoot, adjust, or apply a protect treatment to a rotorcraft, its engine(s), rotor(s), or appliances.

The following topics should be considered when preparing procedures for an ICA.

1. Provide general information about the appliance.

2. Provide a description of the appliance in the procedures.

3. Specify any necessary precautions to be taken during the procedures and include them in Notes, Cautions, and Warnings.

4. Specify tool(s), special tool(s), or equipment required for the procedures.

5. Specify torque value(s) for the appliances and attaching hardware.

6. Provide information to gain access to the appliance.

7. Consumable Materials should be identified by specification/part number, product name, or manufacturer.

8. Identify the appliance that is to be removed, disassembled, cleaned, inspected, checked, repaired, replaced, assembled, checked, serviced, tested, adjusted, or operated.

9. Develop order and method procedures for removing, and/or replacing the appliance, including a procedure to protect opening, lines, and hoses, etc., from contamination.

10. Develop order and method procedures for disassembly and assembly of the appliance, including any special process required and safety precautions.

11. Develop order and method procedures for cleaning the appliance, including any special process(es) to be used during cleaning. Identify type of cleaning materials.

12. Specify what inspections or checks are required and their interval. Develop order and method for inspecting the appliance, including special inspection techniques, standards and limits. Describe what actions are to be taken when appliance is found unacceptable.

(MANUAL IDENTIFICATION)

ATTACHMENT 2
INSTRUCTIONS FOR CONTINUED AIRWORTHINESS
PROCEDURES INFORMATION
(Continued)

13. Develop order and method procedures for making the repair. Identify the type of damage and limits that can be repaired and specify inspection required before the repair can be made. Specify special process(es) to be used to make the repair and acceptable repair materials.

14. Develop order and method procedures for applying protective treatment to the appliance, including any special process(es) to be used during treatment. Specify the type of protective material to be used.

15. Develop order and method procedures for installation of the appliance. Specify special procedure and process(es) to be used. Specify measurements, clearances, and torques for the appliance being installed.

16. Develop order and method procedures for servicing, lubricating, or draining the appliance. Specify the type of servicing material, the quantity, and limits. Specify safety equipment and safety precautions.

17. Develop order and method procedures for testing the part. Specify the type of test and equipment required for the test, including location of connection points. Specify test standards and limits for the appliance being tested. Describe what action should be taken when the test results are unacceptable.

18. Develop order and method procedures for troubleshooting the appliance. Provide troubleshooting information, problem malfunction, and remedial actions.

19. Develop order and method procedures for adjusting the appliance. Specify location for adjusting, and the standards and limits of adjustments. Specify special tool(s) or equipment required to make adjustments. Describe actions to be taken when adjustment is past limits. Provide safety precautions and safety equipment required for adjustment.

20. Develop order and method for safetying or securing the appliances and specify the types of safetying devices.

(MANUAL IDENTIFICATION)

ATTACHMENT 3
ATA CHAPTER LISTINGS

Listed below are the ATA chapters and their titles.

AIRCRAFT GENERAL

Chapter 4 Airworthiness Limitations
Chapter 5 Inspection Requirements
Overhaul Requirements
Chapter 6 Principal Dimension
Chapter 7 Lifting and Shoring
Chapter 8 Leveling and Weighing
Chapter 9 Towing and Taxing
Chapter 10 Parking and Mooring
Chapter 11 Placards and Markings
Chapter 12 Servicing

AIRFRAME SYSTEMS

Chapter 20 Standard Practices - Airframe
Chapter 21 Air Conditioning
Chapter 22 Autoflight
Chapter 23 Communications
Chapter 22 Autoflight
Chapter 23 Communications
Chapter 24 Electrical power
Chapter 25 Equipment and Furnishings
Chapter 26 Fire Detection
Chapter 28 Fuel
Chapter 29 Hydraulic Power
Chapter 30 Ice and Rain Protection
Chapter 31 Indicating and Recording
Chapter 32 Landing Gear
Chapter 33 Lights
Chapter 34 Navigation
Chapter 35 Oxygen
Chapter 36 Pneumatics
Chapter 37 Vacuum
Chapter 45 Centralized Maintenance Sys
Chapter 49 Airborne Auxiliary Power

STRUCTURAL

Chapter 51 Standard Practices - Structure
Chapter 52 Doors
Chapter 53 Fuselage
Chapter 54 Nacelles and Pylons
Chapter 55 Stabilizers
Chapter 56 Windows

ROTORS

Chapter 60 Standard Practices -Rotors
Chapter 62 Main Rotor
Chapter 63 Main Rotor Drive
Chapter 64 Anti Torque
Chapter 65 Anti Torque Drive
Chapter 66 Folding Blades
Chapter 67 Rotor Flight Controls

POWERPLANT

Chapter 70 Standard Practice Engines
Chapter 71 Powerplant
Chapter 72 Engine
Chapter 73 Engine Fuel and Control
Chapter 74 Ignition
Chapter 75 Engine Air
Chapter 76 Engine Controls
Chapter 77 Indicating
Chapter 78 Exhaust
Chapter 79 Oil
Chapter 80 Starting
Chapter 83 Gear Boxes

(MANUAL IDENTIFICATION)

THIS PAGE INTENTIONALLY LEFT BLANK

(MANUAL IDENTIFICATION)

ATTACHMENT 4
TYPE DESIGN CHANGE
ICA RECOMMENDED PROCEDURES

The following information is intended for guidance to assist the applicant in preparing an ICA.

For this sample, we will use a twidget, which is a sounder attached to an extendible cable assembly connected to a pivoting arm, which is mounted to the side of the fuselage structure at the right cabin door forward frame.

> *NOTE: The twidget manufacturer's ICA does not meet the requirements of Appendix A and cannot be referenced.*

The following step-by-step procedure in this sample can be used to prepare an ICA for that appliance:

1. Determine the following:
a. What modifications to the rotorcraft will be required.
b. Determine what appliances will be replaced or added to the rotorcraft.
c. Determine which ATA chapters of the original rotorcraft manufacturer's maintenance manual will be affected by this TDC and which additional ATA chapters will be affected.

2. Review Appendix A, Part 27. Using the information derived in paragraph 1, determine which paragraphs are applicable and which are not applicable. As defined in Figure 2, provide the status of each requirement on the applicable paragraph. If the requirement is not applicable, place an N/A within the parentheses ( ). Address the remaining requirements in the ICA. A completed document for the twidget installation (see Figure 2) is included.

3. Prepare the ICA, which includes the applicable requirements specified in Appendix A to Part 27. This can be done by using the information provided in the Instructions for Continued Airworthiness Template. The regulatory requirements in the sample manual are in bold type. Information to be copied is in normal type. Information in italics is for information only and should not be copied. See Instructions for Continued Airworthiness sample manual.

4. Ensure that the ICA includes the following:
a. A Cover Page, which will readily identify the publication as the applicant's ICA for that make and model rotorcraft.
b. A List of Effective Pages, which lists each page in the ICA and its revision number and revision date.
c. A Record of Revisions Page for listing the revisions which have been inserted in the ICA.

(MANUAL IDENTIFICATION)

ATTACHMENT 4
TYPE DESIGN CHANGE
ICA RECOMMENDED PROCEDURES
(Continued)

5. Table of Contents is not required, but we recommend that it be included in the ICA.

6. Audit the proposed ICA to ensure the applicable requirements have been included. Edit the ICA document to ensure it does not contain incorrect terminology or incorrect references and determine it does contain correct spelling, proper grammar, and accurate information.

7. When referring to another publication, ensure the information in the referenced publication meets the requirements of Appendix A, Part 27. It is the responsibility of the applicant to obtain authorization to use the information contained in the referenced publication. Submit a copy of each publication referenced in the applicant's ICA.

8. Submit two complete copies of the proposed ICA in binders, a copy of the completed Figure 1 document, and a copy of any referenced publication to the FAA/AUTHORITY in sufficient time to allow for evaluation prior to the date acceptance is needed. The average turnaround time is 20 to 30 days depending on the workload at that time.

9. When FAA/AUTHORITY receives the applicant's proposed ICA, the applicant and the appropriate FAA/AUTHORITY are notified. FAA/AUTHORITY reviews and evaluates the ICA in the order they are received.

10. If FAA/AUTHORITY finds the applicant's ICA does not meet the requirements, the review will be discontinued, and the applicant will be notified.

11. When the proposed ICA document, excluding the Airworthiness Limitations Section, is determined to be acceptable, the FAA/AUTHORITY will stamp, sign, and date the ICA. The applicant will be notified of the acceptance.

(MANUAL IDENTIFICATION)

ATTACHMENT 4
TYPE DESIGN CHANGE
ICA RECOMMENDED PROCEDURES
(Continued)

Twidget Type Design Change Attachment 2

1. Use the list of appliances and modifications required for that Type Design Change (TDC) to determine which ATA chapters of the original rotorcraft manufacturer's maintenance manual the TDC will affect and which additional ATA chapters will be affected.

2. The following are component and systems that will be affected by the Twidget TDC:
- *a. Fuselage structure will be modified to mount twidget arm assembly.*
- *b. Cabin door will be modified.*
- c. *Electrical power will be required for electrical motor.*
- *d. Hydraulic power source will be required for deploying and storing twidget arm.*
- *e. Twidget control assembly will be installed in the cabin.*
- *f. Control will be mounted in cockpit for emergency release of the twidget..*
- *g. An Instrument will be installed in instrument panel indicating twidget's position.*
- *h. Twidget recording equipment and monitor will be mounted in cabin.*
- *i. Twidget antenna will be mounted on belly of fuselage.*
- *j. Cables and wiring will be routed through rotorcraft.*
- *k. Two-way communication will be required between the pilot and twidget operator.*
- l. *Twidget gearbox requires servicing to full mark on site gage every 50 hours.*
- *m. Twidget arm assemblies and clutch requires lubrication every 100 hours.*
- *n. Twidget installation requires an inspection every 300 hours*.
- *o.* T*widget arm assembly requires an ultrasonic test every 600 hours.*
- *p. Clutch has a wear tolerance of 1.56 mm.*
- *q. Clutch is life-limited to be replaced every l,000 hours time in service.*
- *r. Twidget gearbox is required to be overhauled every l,000 hours time in service.*
- *s. Twidget gearbox attach bolt torque is 75-ft lb. and twidget arm assembly torque is 110 in lb.*
- *t. Warning: Twidget should be retracted during takeoff, landing, and cruise above 85 knots.*
- *u. Caution: Do not tow or taxi the rotorcraft with the twidget arm deployed.*
- *v. Placards are required on the twidget unit and in the cockpit.*

3. This *example TDC will affect ATA-100 chapters: 4 Airworthiness Limitations, 5 Inspection, 6 Dimensions, 9 Towing and Taxiing, 10 Parking and Mooring, 11 Placards, 12 Servicing, 23 Communication, 24 Electrical, 25 Furnishings, 29 Hydraulic, 31 Indication and Recording, 52 Doors, and 53 Fuselage. A Chapter1 Introduction is also needed.*

(MANUAL IDENTIFICATION)

ATTACHMENT 4
TYPE DESIGN CHANGE
ICA RECOMMENDED PROCEDURES
(Continued)

INFORMATION:
Attachment 4 includes a Figure 2 for Thomas Copter Mods TDC to affix a Twidget installation on Thomas Copter model T-97J helicopter.

Figure 2 is intended to assist in determining which requirements are applicable to this certification project. The document contains each requirement with a set of parentheses, the appropriate regulation, and the location of information in the applicant's ICA.

Information obtained from Attachment 4 can be used to determine which requirements are applicable. For requirements that are not applicable, place an N/A in the parentheses. All other requirements would be applicable to the certification project. Place a Y if the required information is included in ICA. Figure 2 has been completed for the sample Twidget TDC.

Applicant that uses and completes Figure 1 and indicates the location of that information in the applicant's proposed ICA will reduce the time required to evaluate the ICA.

It is important that the applicant include the project number or numbers associated with the ICA, the name of the appropriate FAA/AUTHORITY office, the name of the project engineer, the applicant's company name, the make and model of rotorcraft being modified, and the date.

The completed Figure 1 should be submitted to FAA/AUTHORITY with the applicant's ICA.

(MANUAL IDENTIFICATION)

ATTACHMENT 4
TYPE DESIGN CHANGE
ICA RECOMMENDED PROCEDURES
(Continued)

APPENDIX A PART 27 REQUIREMENTS

The following is a breakdown of Appendix A to FAR/JAR Part 27 and is intended to provide guidance to assist an applicant for a Type Design Change under a Type Certificate (TC), Supplemental Type Certificate (STC), or Field Approval (FA) requiring Instructions for Continued Airworthiness (ICA). The breakdown is intended to provide guidance to assist an applicant in understanding the ICA requirements of FAR/JAR § 27.1529. An applicant may use the guidance to prepare the ICA. Completion of this appendix will provide information needed for the evaluation and will reduce the time required for evaluation of the proposed ICA.
( ) Status of ICA: Y = Yes included; N/A = non-applicable. The Location Column lists the page number in the Applicant's ICA that contains the information.

Project Number(s) ST01998RC-R

ACO/FSDO: Rotorcraft ACO Project Engineer: Data Mastermine

Applicant: Thomas Copter Mods Make: Thomas Copter Model: T97-J Date June 18, 1998

Requirement	Regulation	Location
(N/A) ICA for each engine	***A27.1(b)***	N/A
(N/A) ICA for each rotor	***A27.1(b)***	N/A
(Y) ICA for each appliance required by this chapter	***A27.1(b)***	* All
(Y) Any required information relating to the interface of the (Y) appliances, (N/A) engines and (N/A) rotors with the rotorcraft.	***A27.1(b)***	See NOTE 1
(Y) If ICA are not supplied by the manufacturer of an (N/A) appliance, (N/A) engine or (N/A) rotor installed in the rotorcraft, the ICA for the rotorcraft must include (Y) the information essential to the continued airworthiness of the rotorcraft.	***A27.1***	* All
(Y) A program showing how changes to the applicant's ICA will be distributed.	***A27.1(c)***	ATA 0
(N/A) A program showing how changes to the ICA of the manufacture of the engine(s), rotor(s) and appliances installed in the rotorcraft will be distributed, if referenced in applicant's ICA	***A27.1(c)***	N/A
(Y) ICA that must be in a form of a manual or manuals as appropriate for the quantity of data.	***A27.2(a)***	* All
(Y) A format of the manual or manuals which must provide for a practical arrangement.	***A27.2(b)***	* All
(Y) Content prepared in the English language.	***A27.3***	* All

Figure 2

(MANUAL IDENTIFICATION)

ATTACHMENT 4
TYPE DESIGN CHANGE
ICA RECOMMENDED PROCEDURES
(Continued)

Requirement	Regulation	Location
(Y) Introduction information that includes (Y) an explanation of the rotorcraft's features and (Y) data to the extent necessary for maintenance and preventive maintenance.	***A27.3(a)(1)***	ATA 0
(Y) A description of the (N/A) rotorcraft and its systems and installations, (N/A) engines and its systems and installations, (N/A) rotors and its systems and installations, (Y) appliances and its systems and installations.	***A27.3(a)(2)***	ATA 25
(Y) Basic control and operating information describing (Y) how the rotorcraft components and systems are controlled and (Y) how the rotorcraft components and systems are operated including (Y) any special procedure and limitations.	***A27.3(a)(3)***	ATA 25
(Y) Servicing information that covers details regarding (Y) servicing points, (N/A) capacities of tanks, (Y) capacities of reservoirs, (Y) types of fluids to be used, (Y) pressures applicable to the various systems.	***A27.3(a)(4)***	ATA 12
(Y) Location of access panels for (Y) inspection and (Y) servicing.	***A27.3 (a)(4)***	See NOTE 2
(Y) Servicing information that covers details regarding (Y) locations of lubrication points, (Y) the lubricant to be used.	***A27.3(a)(4)***	ATA 12
(Y) Equipment required for servicing.	***A27.3(a)(4)***	ATA 12
(Y) Tow instructions and limitations.	***A27.3(a)(4)***	ATA 9
(Y) Mooring information	***A27.3(a)(4)***	ATA 10
(N/A) Jacking information	***A27.3(a)(4)***	N/A
(N/A) Leveling information	***A27.3(a)(4)***	N/A
(Y) Scheduling information for each part of the (Y) rotorcraft that, provides the recommended periods at which they should (Y) cleaned, (Y) inspected, (Y) adjusted, (Y) tested, (Y) lubricated and (Y) the work recommended at these periods.	***A27.3(b)(1)***	See NOTE 3
(N/A) Scheduling information for the (N/A) rotorcraft's engine(s) that provides the recommended periods at which they should be (N/A) cleaned, (N/A) inspected, (N/A) adjusted, (N/A) tested, (N/A) lubricated and (N/A) the work recommended at these periods. *NOTE: This information may be in the FAA/AUTHORITY accepted engine ICA.*	***A27.3(b)(1)***	N/A

Figure 2 (continued)

(MANUAL IDENTIFICATION)

ATTACHMENT 4
TYPE DESIGN CHANGE
ICA RECOMMENDED PROCEDURES
(Continued)

Requirement	Regulation	Location
(N/A) Scheduling information for the (N/A) rotorcraft's auxiliary power unit(s)(APU) that provides the recommended periods at which they should be (N/A) cleaned, (N/A) inspected, (N/A) adjusted, (N/A) tested, (N/A) lubricated and (N/A) the work recommended at these periods.	***A27.3(b)(1)***	N/A
(N/A) Scheduling information for the (N/A) rotorcraft's rotor(s) that provides the recommended periods at which they should be (N/A) cleaned, (N/A) inspected, (N/A) adjusted, (N/A) tested, (N/A) lubricated and (N/A) the work recommended at these periods.	***A27.3(b)(1)***	N/A
(Y) Scheduling information for the (Y) rotorcraft's accessories that provides the recommended periods at which they should be (Y) cleaned, (Y) inspected, (Y) adjusted, (Y) tested, (Y) lubricated and (Y) the work recommended at these periods.	***A27.3(b)(1)***	See NOTE 3
(Y) Scheduling information for the (Y) rotorcraft's instruments that provides the recommended periods at which they should be (Y) cleaned, (Y) inspected, (Y) adjusted, (Y) tested, (Y) lubricated and (Y) the work recommended at these periods.	***A27.3(b)(1)***	See NOTE 3
(Y) Scheduling information for the (Y) rotorcraft's equipment that provides the recommended periods at which they should be (Y) cleaned, (Y) inspected, (Y) adjusted, (Y) tested, (Y) lubricated and (Y) the work recommended at these periods.	***A27.3(b)(1)***	See NOTE 3
(Y) The degree of inspection for each part of the (N/A) rotorcraft and its (N/A) engine(s), (N/A) auxiliary power unit, (N/A) rotor(s), (Y) accessories, (Y) Instruments and (Y) equipment.	***A27.3(b)(1)***	ATA 5
(Y) The applicable wear tolerances	***A27.3(b)(1)***	ATA 25
The applicant may refer to an (N/A)accessory, (N/A) instrument, or (N/A) equipment manufacturer as the source of this information if the applicant shows (N/A) that the item has an exceptionally high degree of complexity requiring specialized maintenance techniques, test equipment, or expertise.	***A27.3(b)(1)***	N/A
(Y) The recommended overhaul periods and necessary cross references to the Airworthiness Limitation Section.	***A27.3(b)(1)***	ATA 5

Figure 2 (continued)

(MANUAL IDENTIFICATION)

ATTACHMENT 4
TYPE DESIGN CHANGE
ICA RECOMMENDED PROCEDURES
(Continued)

Requirement	Regulation	Location
(Y) An inspection program that includes (Y) the frequency and (Y) extent of the inspection necessary to provide for the continued airworthiness of the rotorcraft.	***A27.3(b)(1)***	ATA 5
(Y) Troubleshooting information describing (Y) problem malfunctions, (Y) how to recognize those malfunctions and (Y) the remedial action for those malfunctions.	***A27.3(b)(2)***	See NOTE 4
(N/A) Information describing the order and method of (N/A) removing and (N/A) replacing engine(s) with any necessary precautions to be taken.	***A27.3(b)(3)***	N/A
(N/A) Information describing the order and method of (N/A) removing and (N/A) replacing rotor(s) with any necessary precautions to be taken.	***A27.3(b)(3)***	N/A
(Y) Information describing the order and method of (Y) removing and (Y) replacing parts with any necessary precautions to be taken.	***A27.3(b)(3)***	ATA 25
(Y) Other general procedural instructions including (N/A) storage limitations and procedures for (N/A) testing system during ground running, (N/A) making symmetry checks, (Y) weighing and determining the center of gravity, (N/A) lifting, (N/A) shoring.	***A27.3(b)(4)***	ATA 8
(N/A) Diagrams of structural access plates and information needed to gain access for inspections when access plates are not provided.	***A27.3(c)***	N/A
(N/A) Details for the application of special inspection techniques including radiographic and ultrasonic testing where such process are specified.	***A27.3(d)***	N/A
(N/A) Information needed to apply protective treatment to structure after inspection.	***A27.3(e)***	N/A
(Y) All data relative to structural fasteners such as (Y) identification, (Y) discarded recommendations, and (Y) torque values.	***A27.3(f)***	ATA25
(Y) A list of special tools needed	***A27.3(g)***	NOTE 5
(Y) The Instructions for Continued Airworthiness must contain a section, titled Airworthiness Limitations that is (Y) segregated and (Y) clearly distinguishable from the rest of the document. *NOTE: The Airworthiness Limitations Section in the applicant's ICA will be evaluated by the appropriate FAA/AUTHORITY.*	***A27.4***	ATA 4

Figure 2 (continued)

(MANUAL IDENTIFICATION)

***ATTACHMENT* 4**
TYPE DESIGN CHANGE
ICA RECOMMENDED PROCEDURES
(Continued)

Requirement	Regulation	Location
(N/A***) The Airworthiness Limitations Section must set forth each mandatory replacement time, structural inspection procedure approved under § 27.571.***	***A27.4***	N/A
(*Y* ***) If the Instructions for Continued Airworthiness consist of multiple documents, the Airworthiness Limitations Section required by this paragraph must include in the principal manual.***	***A27.4***	ATA 4
(*Y* ***) The Airworthiness Limitations Section must contain a legible statement in a prominent location indicating that the Airworthiness Limitations Section is FAA/AUTHORITY-approved and specifies required maintenance and/or inspections. The exact, required wording of this statement is found in the FAR/JAR.***	***A27.4***	ATA 4

Figure 2 (continued)

NOTE: The Airworthiness Limitations Section (ALS) is evaluated and approved by FAA/AUTHORITY.

THIS PAGE INTENTIONALLY LEFT BLANK

AC 27 APPENDIX B. AIRWORTHINESS GUIDANCE FOR ROTORCRAFT INSTRUMENT FLIGHT

[See new addition to AC 29 Apndx B (dated 9/17/2009) posted as a separate document in RGL with this Master AC.]

a. Explanation. Requirements for instrument flight rules (IFR) have been incorporated into Part 27, Appendix B, Amendment 19. Various information from previous interim standards, procedures, test techniques, and acceptable means of compliance for rotorcraft IFR flight are included in the following sections.

b. Procedures.

(1) General.

(i) The certified instrument flight envelope may be more restrictive than the visual flight rules (VFR) envelope in terms of weight, CG, speed, altitude, or rate of climb and descent. The approved envelope should be operationally practical and not impose constraints with which the crew has difficulty complying. The IFR altitude envelope should extend to at least 10,000 feet to be operationally practical in the National Airways System.

(ii) Controllability requirements are to be met from 0.9 V_{MINI} to 1.1 V_{NEI}. Stability requirements must be met where specified. Stability devices are to be designed to allow safe flight following failures. The evaluating pilot should assure that all equipment and devices installed for IFR, including reasonable failures of that equipment, do not compromise the VFR approval for that rotorcraft. Examples include stability system failures that can cause loss of swashplate or tail rotor control travel when they fail in a hardover condition. If the device remains in the hardover position after the stability system is turned off, control capability can be compromised. Cyclic controllability tests at high speed and at the limiting rearward flight condition, or tail rotor tests in sideward flight at high altitude, may reveal a lower control capability and a more restrictive envelope. Revision to the envelope approved for VFR conditions may be required when stability equipment is installed. In addition, controllability testing should be accomplished with the control rigging set at the most adverse production tolerance for the test condition; e.g., minimum forward swashplate for high speed testing.

(2) Trim. Compliance with the IFR trim requirement may be met by use of a magnetic brake with a recentering button, an electrically driven trim system activated by a “beeper” type control, or other means, so long as the system does not introduce any objectionable discontinuities in the force gradient or otherwise result in objectionable flight characteristics. Trim release devices should be free of objectional stick jump. Electrically driven trim systems should have a smooth change in force with a rate compatible with the normal rotorcraft maneuvers. Only the cyclic trim control must exhibit positive self-centering characteristics. Collective and pedal controls are not required to incorporate positive self-centering characteristics. Movement of the trim controls should produce a similar effect on the rotorcraft in a plane parallel to that of the control motion. The control system free play and breakout force must be evaluated to assure a close and direct correlation between control input (force and deflection) and

rotorcraft response (pitch, roll, yaw, and heave (vertical motion)), and to permit small, precise changes in flight path. If trim control is provided in a stability augmentation system (SAS), the control should be of such design and so installed that any failure will not create a hazardous condition. If an inadvertent out-of-trim condition can be developed, its effect on the rotorcraft should be investigated. These failures or malfunctions should be investigated as outlined in (6) “Stability Augmentation Systems” which follows. Controls for this trim function should be installed such that the controls should operate in the plane and with the sense of motion of the rotorcraft. Each control means should have the direction of motion plainly marked thereon or adjacent to the control.

(3) Static Longitudinal Stability.

(i) Positive static longitudinal stability is a key IFR requirement which assures a self-correcting airspeed response and allows a pilot to recognize any substantial change in speed. The phrase “substantial speed change” as used in FAR 27, Appendix B, paragraph IV, is normally considered to mean at least a 10 knot departure from trim speed. Such a change in airspeed must be accompanied by a stick force clearly perceptible to the pilot (i.e. a discernable and quantifiable force gradient). Very shallow force gradients can be approved for systems with low deadband and low friction. Systems with significant friction and deadband require much steeper force gradients to be acceptable. The longitudinal force gradient can be determined by either of two methods. The most commonly used method (applicable only to irreversible control systems) measures the cyclic forces with the rotorcraft on the ground and the rotor stopped (with hydraulic and electric power units if required). The force applied to the cyclic stick and the cyclic stick displacement are measured and a plot of stick force verses displacement in each longitudinal direction is obtained. Following the ground test, the longitudinal static stability tests are conducted in the air as described in paragraph AC 27.175. The cyclic displacement measurements gathered during flight test are then assigned force values from the ground mechanical characteristics test and the force values are cross plotted with the corresponding airspeeds to produce a plot of cyclic force verses airspeed. The trim system should be on during the test and the aircraft trimmed at the trim speed. After each end point, the cyclic should be allowed to slowly return to the trim position. When all the force is released from the cyclic stick and the airspeed has stabilized, note the airspeed. For single pilot approval only, the airspeed must return to within 10 percent or 10 knots, whichever is less, of the trim speed. An alternate method of determining the longitudinal stick force stability is to measure the force on the cyclic stick in flight using a hand held force gage or other force measuring instrumentation. The in-flight technique is the same as the first method. Testing should be accomplished at a minimum of two altitudes. One altitude should be low enough to assure limiting power is attained. Another should be at or near the maximum approved altitude. Reasonable interpolation is allowed. If no marginal areas are apparent, interpolation over a 10,000 foot altitude range is considered reasonable.

(ii) Tests for static longitudinal stability during approach should include the steepest approach gradient for which approval is requested. Static stability tests

may be simulated by initially establishing a trimmed rate of descent for maximum approach gradient assuming zero wind conditions. Actual approach tests at the maximum approved gradient should be conducted to evaluate tracking and maneuverability, including the capability to correct downward to a glide path when approaching in a slight (10 knot) tailwind condition.

(iii) Rotorcraft that are approved for a minimum crew of two pilots for IFR operation are relieved from demonstrating stick force stability in climb, slow cruise, and descent. It is expected that these rotorcraft do comply with the VFR certification requirements of § 27.175.

(4) Static Lateral Directional Stability.

(i) Tests for directional stability usually require instrumentation for lateral cyclic position, pedal position, and sideslip angle. Testing for compliance with the specific directional requirement is relatively simple; however, the pilot should look for significant longitudinal trim changes, and short-period dynamic modes which occur only during sideslip conditions. Side force characteristics are indicated by the variation of bank angle with sideslip during steady heading sideslips. The number of ball widths of deflection is also indicative of the side force cue available to the pilot. A correlation between sideslip angle and ball widths of skid can be obtained at given speeds for use during later testing after sideslip instrumentation is removed. A simple yaw string can be calibrated in a similar manner. The TIA should define the maximum sideslip angles which should not be exceeded during the flight test program. These angles must not be greater than the structural sideslip envelope substantiated and are not required to be that sideslip angle obtained with full directional pedal deflection. Sufficient side force cues should accompany sideslip to alert the crew when approaching sideslip limits. This is needed to assure that structural sideslip limits will not be inadvertently exceeded in service. Although not stated in the requirement, flight conditions for demonstration of static longitudinal stability are also appropriate for demonstration of static lateral-directional stability.

(ii) Dihedral requirements may be more difficult to assess. For those rotorcraft which do not meet the position and force gradient requirements for the conventional, cross-controlled sideslips, there are alternative tests which may be used to determine acceptable characteristics. If directional pedals are utilized in steady sideslips, the resultant rolling tendency is the sum of (1) the aircraft's roll due to sideslip tendency (dihedral), and (2) the aircraft's roll due to directional control input. If the rotorcraft has a tail rotor which is excessively high or low in relation to the rotorcraft's vertical CG, application of tail rotor thrust will introduce a significant rolling moment. The basic intent of dihedral stability testing is to determine the rotorcraft response to sideslip exclusive of directional control input. In general, if a tail rotor configuration is involved and the tail rotor is above the vertical CG of the rotorcraft, the effect of pedal input upon dihedral effect is destabilizing during conventional, control-induced sideslips.

(iii) There are two alternate methods which, for small angles of sideslip, can give an indication of the basic dihedral stability of the rotorcraft. Both methods involve freezing the directional controls while artificially creating sideslip by other means.

(iv) The first method is only applicable for rotorcraft with single main rotor systems. To utilize this method, the rotorcraft is stabilized in a given flight condition and small collective (torque) changes are applied in each direction (e.g., ±5 percent and ±10 percent) while holding pedals fixed. Sideslip angle, lateral control position, and lateral control force may be measured and plotted for small torque changes from trim. This technique will not work for aircraft which have collective to pedal or collective to lateral control couplings.

(v) In the second method, the rotorcraft is stabilized in a trimmed flight condition with a small amount of bank (5°-10°). The rotorcraft is then rolled to an approximately equal angle of bank in the opposite direction holding the pedals fixed. The change in direction of bank results in a small change in sideslip angle and again sideslip angle may be plotted versus lateral control position and/or force. This test should be conducted in both directions and the results averaged. This method can give reasonably accurate results for small perturbations. Other factors contribute to the results of either of these two methods. It is always important to assess the roll due to sideslip tendency with pedal induced sideslips to assure lateral control forces are reasonable and in a proper direction for directional out-of-trim conditions, and to assure the pilot has adequate sideslip cues.

(vi) Wording of the dihedral requirement is intended to allow slightly negative dihedral stability at critical loading conditions. This will ordinarily result in positive dihedral stability throughout a great majority of the approved loading envelope. The test for maximum allowable negative dihedral effect would involve stabilization at a required flight condition, inducing a sideslip up to ±10° from trim, then assessing lateral cyclic friction/deadband to determine if roll is restrained while remaining in the control system friction/deadband so that the control may be released without resulting in the aircraft rolling in the adverse direction. When testing for this condition, lateral cyclic friction should be adjusted to the minimum value.

(vii) The intent of the dihedral rule is to allow small amounts of control system friction and deadband to mask small values of negative dihedral. Where slope of the negative dihedral versus sideslip exceeds these small values, the negative dihedral shall not be approved. The operational pilot must not be presented with opposite cyclic sensing for similar sideslip conditions as loadings and flight conditions change. In general, large values of control system friction and deadband are undesirable. The addition of friction or deadband into the control system for the purpose of satisfying the dihedral requirement is not acceptable.

(viii) In approving small, negative dihedral values, the pilot should ensure that other positive flight cues, such as suitable side force, accompany sideslip. This will

aid the pilot in determining direction of sideslip so that no reverse sensing or confusion accompanies sideslip conditions.

(5) Dynamic Stability.

(i) Dynamic characteristics are defined in quantitative terms; however, some areas of interpretation and technique need special consideration:

(A) Unlike fixed-wing aircraft, where the size of the input has no effect on damping ratio, rotorcraft can be sensitive to the type and size of input used to excite each dynamic mode. For instance, it has been found that for the phugoid-type dynamic oscillation, damping ratio is inversely proportional to the size of the input. It therefore becomes important that dynamic excitations be sized to approximate the response of the rotorcraft in a moderate, turbulent gust. Also, the dynamic input should be made with the control(s) which most accurately simulates the typical aircraft gust response. Obviously, for this evaluation some flying of the rotorcraft in turbulence is necessary to obtain knowledge of the rotorcraft's gust response. Pulses and doublets may be used to generate disturbances similar to a gust. To assist returning the control(s) to the trim position, a hand held jig may be used. Use of attitude and rate instrumentation is desirable. The pilot may find that collective excitation, or collective in conjunction with cyclic, is most appropriate for gust simulation.

(B) The second area of concern in evaluating dynamic response is whether to let only one axis respond to an excitation or to let the rotorcraft respond in two or more axes. When it can be done safely, the rotorcraft should be allowed to follow its dynamic response in all axes. In other words, if pitch oscillations feed into roll, the pilot should attempt to observe and record the total aircraft dynamic response in both pitch and roll.

(C) The third area concerns strict compliance with the exact wording of the dynamic requirement. In this regard, a neutrally damped oscillation with a period of 19 seconds would not be acceptable; however, a very divergent oscillation that doubles in amplitude in 21 seconds would be acceptable. The 19-second oscillation is much less severe than the 21-second oscillation and yet is unacceptable by the "letter of the law." Figure AC 27.APX B-1 is a graphic display of the dynamic requirement. The 19- and 21-second oscillations are shown as points (1) and (2). Point No. 1 is positioned much more toward the acceptable portion of the graph and yet by the "letter of the law" is unacceptable. The intent of the dynamic requirement is roughly approximated by the dashed/curved line. Areas to the right of that line may be considered for findings of equivalent safety.

(D) A fourth area requiring special care in testing is the aperiodic requirement. The most common aperiodic motion is the spiral characteristic which results when aircraft attitude is displaced in roll. The preferred method for testing this requirement is to stabilize precisely on a trimmed condition in straight flight, then displace the rotorcraft to 10° of bank, stabilize momentarily, set the controls as they

were positioned for straight flight, and release them. Time and bank angles are then recorded. Recovery is initiated when bank angle or roll rate becomes excessive. Of particular interest is the time for bank angle to pass 20°, and this time should not be so short as to cause the aircraft to have objectionable flight characteristics in the IFR environment. The time period to double amplitude (20°) should be at least 9 seconds. It is vitally important that controls (particularly lateral cyclic) are positioned exactly as for the straight flight condition. If a high resolution force trim system is not incorporated, an alternative method may be used. In this second method, the rotorcraft is trimmed for straight flight as described above and controls are released. Roll attitude may simply be allowed to vary naturally with time, or small pulse input may be made with pedals. It is important that controls are positioned precisely as they were for the trimmed, straight flight condition and a plot of bank angle versus time is obtained. This plot is then compared against a divergent roll condition which doubles in amplitude every 9 seconds. Of particular interest is again the rate passing 20° of bank. If airspeed changes as the aircraft rolls or if roll/pitch coupling occurs, these changes should be allowed to interact naturally until recovery is necessary. Due to the sensitive nature of this test, smooth air is essential. Repeatability may be a problem. At least two test points in each direction should be obtained at each trim condition. Results may be averaged if they show reasonable repeatability. The same procedures may be utilized for an aperiodic pitch response; however, a displacement of 5° from trim should be used, and of particular importance is the pitch rate passing 10°. Again, at least two test points in each direction should be obtained for each trim condition. Although not stated in the requirement, the flight conditions for demonstration of static longitudinal stability are also appropriate for demonstration of dynamic stability. Rotorcraft certificated for a minimum crew of two pilots are required to demonstrate longitudinal static force stability in the cruise and the approach configuration. Compliance with the dynamic stability requirements should be demonstrated for these configurations, and the rotorcraft should be free from rapid and excessive rates of divergence in the other flight configuration. The degree of testing referred to here represents that which might be required of a marginally stable rotorcraft. For those configurations which provide good aerodynamic stability or use varying degrees of SAS, the scope of the demonstration program would be decreased significantly.

(ii) Control system dynamics should also be evaluated. This may be accomplished by lightly bumping each control in flight and observing its free response. Any resulting control motion must dampen quickly and should not be driven by aircraft/control system interaction. This will ensure safe flight in the event a control is inadvertently bumped or released from an out-of-trim condition.

(6) Stability Augmentation System(SAS).

(i) If a SAS installation stabilizes the rotorcraft by allowing the pilot to “fly through” and perceive a stable, well-behaved vehicle, it qualifies as a SAS and, if reliable, receives credit under Sections III through VII of Appendix B for use in complying with all handling qualities requirements. If a conventional autopilot does not provide “fly through” capability or allow the pilot to perceive a stable, well-behaved

vehicle through his manipulation of primary flight controls and feedback from those controls, then it tends to remove him from active involvement in flying and is eligible primarily as a workload reliever.

(ii) If handling qualities credit is given for a SAS then it must be shown to be reliable. If a reliable SAS is incorporated, it should be operational during handling qualities testing for trim and stability. Reasonable single failures of the SAS must be evaluated and the resultant handling qualities must be evaluated to assure that in this degraded configuration (1) handling qualities have not been degraded below “VFR” levels defined in FAR Part 27, Subpart B; (2) the rotorcraft is free from any tendency to diverge rapidly from stabilized flight conditions; and (3) the rotorcraft can be flown IFR throughout its endurance capability without undue difficulty by the minimum flightcrew. Compliance with a majority of the IFR handling qualities requirements is desired, and the degraded characteristics should be documented and explained. Revised flight envelope boundaries for the failed condition may be considered if they are controllable by the pilot; e.g., altitude and airspeed. When loss of a SAS results in a need for minor adjustment of a flight condition, then a system can be accepted that allows failures during the life of each rotorcraft. If loss of the system will prevent continuation of safe flight and landing, the reliability of the system must be high enough to assure that failure of the system will not be expected to occur during the life of the rotorcraft fleet. When evaluating the reliability of a system, the installation of the system should be considered as part of the design. The total system including inputs, outputs, environment, isolation features, and exposure times is a pertinent consideration.

(iii) Stability augmentation system reliability is evaluated by systems and equipment personnel. If credit is to be given for system reliability and the applicant exempted from consideration of malfunction, hardover and oscillatory conditions (limited to critical frequencies determined during autopilot failure analysis), a thorough system evaluation is needed. Flight test personnel should coordinate closely with the systems and equipment personnel whenever credit is given for advanced design and system reliability because the hardover/malfunction condition may not require in-flight testing. The decision is made on the basis of system design, failure analysis, and overall probability of malfunction. If flight testing is required, appropriate delay times as shown below are required.

If the system is to be approved without flight restrictions (operating at all times), malfunctions should be demonstrated to be satisfactory during takeoff, climb, cruising, landing, maneuvering, and hovering.

If a flight restriction is provided, it should be determined as appropriate. Appropriate operating limitations should be specified and significant information regarding the restriction should be made available to the pilot in the operating procedures section of the rotorcraft flight manual.

Flight Condition	Time Delay
Hover, takeoff, and landing	Normal pilot recognition and reaction time
Maneuvering and approach	Normal pilot recognition plus 1 second Note: Recovery from simulated malfunctions of any SAS axis occurring while the pilot is applying control inputs to cause rotation about that axis may be initiated with normal pilot reaction; the 1-second delay in maneuvering flight pertains to established turns (level, climbing, and descending) only.
Climb, cruise, and descent	Normal pilot recognition plus 3 seconds.

For rotorcraft requiring a minimum crew of two pilots and with stability systems that do not have coupling capability such as vertical speed hold, altitude hold, or navigation tracking, a time delay of 1 second may be used in climb, cruise, and descent. Reference to visual cues is assumed only in hover, takeoff, and landing. For other flight conditions, the pilot is assumed to recognize the malfunction condition without reference to outside visual cues. If the stability system has not previously been certified as a part of the aircraft for VFR flight, malfunctions should also be conducted throughout the VFR envelope. Pickup to a hover, landing, sideward, rearward, and forward hovering flight must be considered. Because of the visual cues available to the pilot operating VFR, shorter delay times following stability system malfunctions may be appropriate. These delay times are:

(A) One to 3 seconds delay for cruising flight. (The time delay selected should be based upon the degree of stability provided and the amount of alertness required of the pilot. For example, a three second delay would normally be appropriate for cruise speeds up to and including V_H while a one second delay would be appropriate from V_H to V_{NE}.

NOTE: If the improved stability and the resultant higher degree of relaxation by the pilot has justified time delays greater than one-second minimum in cruise, then a reexamination is in order of the engine failure time delays used during the original type certification prior to the SAS installation.

(B) One second delay for climbing flight.

(C) Zero second delay for takeoff, landing, hovering, and maneuvering flight.

(iv) A good method to accurately determine pilot recognition and reaction time is to establish typical climb, cruise, descent, and approach conditions and instruct a subject pilot to react as soon as he recognizes individual hardover conditions in pitch, roll, yaw, and heave (if installed). Several pilot subjects may be used. Sensitive recording instrumentation is needed to show the hardover input to the actuator and the pilot's initial control movement. This procedure is usually conducted prior to the critical hardover tests so that the total necessary time delay (recognition plus 3 seconds, etc.) can be established. This procedure actually determines recognition plus reaction time, although reaction time has been shown in hardover testing to be a relatively constant 0.5 seconds. Different recognition times for various axes are not unusual. During one recent program, recognition time for directional hardovers was 0.3 second, but for roll hardovers was 0.9 second. There is typically 0.1 second or less scatter among properly briefed pilots. Recognition time is then added to delay time to determine total necessary delay for hardover testing. As an example, for the above roll condition, a single pilot configuration would require a total 3.9-second duration from signal input to initial control actuation for recovery. Allowable attitude excursions must also be considered. Although allowable attitude excursions during hardover testing probably depend more upon acceleration and rate of acceleration than on attitude, a general rule of 30° pitch and 60° bank may be used. For some designs, maximum safe attitudes may be lower. Certain responses with rapid initial motion, but self-correcting characteristics thereafter, have been allowed to diverge as much as 55° in pitch and 80° in roll as long as no rotor system or control difficulties result during malfunction or recovery. The key is: Can a safe, reasonable recovery be made without exceeding aircraft limits? During high speed malfunction testing, the maximum speed allowable during malfunction or during recovery is 1.11 V_{NE} (V_{DF}). The maximum allowable speed for SAS operation must be adjusted to prevent exceeding V_{DF} during malfunction testing at any altitude.

(v) Applicable procedures and techniques for conduct of hardover tests are contained in paragraph AC 27.1329. If a quick disconnect device is incorporated, it should be reachable with a finger on the hand operating the appropriate recovery control and should be operable without removing the hand from that control. A quick disconnect system can be used on duplex system if overall reliability of the system is acceptable. All cockpit emergency controls including emergency quick disconnects should be "red." The quick disconnect may be actuated at initiation of recovery. Other disconnects should only be actuated after full aircraft control has been achieved following recovery. Aircraft limits may not be exceeded during malfunction or recovery. If a monitor device automatically disconnects the SAS, it must be clearly annunciated to the crew.

(vi) Series actuator hardover conditions in some rotorcraft can seriously degrade control margin. Critical loadings, power settings, RPM, and altitudes in conjunction with a SAS actuator hardover in an adverse direction can result in reduction of control travel requiring flight envelope constraints. Flight testing is usually necessary to determine the appropriate flight envelope reductions.

(vii) Subsequent failures and unrelated probable combinations of failures must be considered, including subsequent SAS failures. Systems and equipment section analysis should provide necessary SAS malfunction combinations for flight testing as a result of their system analysis. Minimum requirements for dispatch and procedures following failure should be included in the malfunction analysis. Results of the probability analysis and the resultant malfunction configurations are primarily the responsibility of the systems and equipment section.

(viii) No reasonably probable failure should result in a worse condition than that tested for hardovers. For example, if a magnetic brake force trim system is employed, failure of electrical power to the magnetic brake circuit may cause the cyclic control to fail which may result in a more dangerous flight condition than individual SAS hardovers. The overall control system is to be evaluated for all probable failures to preclude hazardous failure conditions. Other areas for investigation include beep trim and auto trim failures. The delay times of paragraph AC 27 Appendix B b(6)(iii) are appropriate for all such failures. System malfunctions may also include component failures which result in oscillatory outputs of the actuator(s). These should be sustainable at least as long as the specified hardover delays, should be manageable thereafter with hands on the controls, and should allow disconnect of the malfunctioning system.

(ix) Engine failure requirements are not entirely consistent with the SAS failure time delays shown in paragraph AC 27 Appendix B b(6)(iii). Engine failure time delays remain as specified in § 27.143(d), and they are lower than corresponding SAS failure delays. Critical engine failure conditions should be reverified during simulated instrument flight with primary reference to flight instruments. Lower time delays for engine failure have been justified on the basis of immediate cues for the critical high powered condition and requirements for engine failure warning systems. Many rotorcraft designs simply cannot endure a 3-second time delay for critical engine failure conditions. Nevertheless, engine failure, autorotation entries, and autorotation descent (for single-engine rotorcraft and multiengine rotorcraft without Category A engine isolation) should be evaluated in simulated IFR conditions, and these flight characteristics must be acceptable.

(7) Controllability.

(i) Control harmony should be present. There should be no objectionable cyclic to collective or roll-yaw-pitch cross coupling.

(ii) Control forces following a control system malfunction such as a hydraulic system failure should be low enough to allow completion of the intended flight. It may not be possible to land early during an actual IFR flight.

(iii) There should be no tendencies for pilot-induced oscillations; There should be no sustained or uncontrollable oscillations resulting from the efforts of the pilot to control the rotorcraft.

(iv) The control system should have sufficient resolution to permit accurate and precise instrument maneuvers. Some control systems with high breakout forces in conjunction with low control force gradients do not lend themselves to satisfactory instrument flight capability.

(8) Cockpit Arrangement.

(i) The primary flight instrument basic T (or a modified T with VSI above the altimeter) should be located as nearly in front of the pilot as possible. All annunciation necessary for operation of stability systems should be readily in view. Secondary flight (or navigation) instruments such as radar altimeter and secondary radio course information, DME, etc., should be grouped around the periphery of the T. Next in priority are primary power instruments such as torque and rotor RPM.. Powerplant instruments and backup attitude information should be placed in the remaining panel areas. Various research and development efforts and previous certification programs have revealed that it is desirable not to locate the standby attitude indicator immediately adjacent to the basic flight instrument T. The standby attitude indicator must be usable and flyable from the primary pilot station (and any other pilot station); however, locating it too close to the primary instruments may be undesirable and should be evaluated. If the standby attitude information is close to the pilot's normal flight instrument scan, he may begin to compare attitude information between the two indicators in his normal instrument scan. Every pilot eye motion to compare these indicators could be a wasted motion that could be more efficiently applied in the normal scan. The pilot should fly either the primary or the backup indicator and it may be an aid if these indicators are noticeably separated. When the standby indicator is located apart from the normal scan and the primary indicator fails, the pilot is conscious of a distinctly different instrument scan and is less likely to be continuously coming back to the center of the basic T for attitude reference. Physical separation can assist the transition to standby attitude flight.

(ii) All cockpit controls necessary for normal and emergency operations should ideally be located so that they may be actuated without upper body movement. Moderate head and body movement has been accepted; however, these motions must be evaluated for their vertigo inducing effects. No IFR controls should be located aft of a vertical plane passing left to right (laterally) through the pilot's body.

(iii) If a copilot position is approved, the copilot must have a complete set of flight controls and must be capable of independently flying and navigating the rotorcraft from his position. The copilot must be capable of controlling at least one primary navigation source so that he can operate the rotorcraft during normal conditions without relying on the first pilot to perform needed cockpit functions. Some instruments can be shared between pilots depending on instrument panel presentation. Some examples from previous programs include standby attitude, rotor tachometer (if the aircraft has automatic governing and the crew is provided visual and aural RPM warning), and secondary powerplant instruments such as N_g, oil pressure, and temperature.

(iv) Proper cockpit annunciation is essential for safe operation. SAS and autopilot modes must be properly annunciated. Appropriate annunciator color coding is contained in § 27.1322. There must be no question in regard to the source of navigation information presented to the crew. Where navigation switching is available between individual displays and between pilot positions, the first pilot should have overriding control for his displays.

(v) Electromechanical Displays. The requirements of Appendix B to Part 29 in sections, VIII.(b)(5)(i) through (iii) are the same requirements as those found in § 29.1333. Prior to Amendment 29-24 and § 29.1333, this requirement was titled "Duplicate Instrument Systems," and its provisions were intended to apply when duplicate flight instruments were required by any operating rule. Due to the increased complexity of instrumentation that was available and being used, it was considered appropriate to amend the provisions of this requirement to more appropriately consider the extreme range of operational environments to which rotorcraft were being routinely exposed. It is the intent of Part 29, Appendix B, VIII.(b)(5) to prevent degrading of the first pilot's instrument system, or the only pilot's instrument system in a single-pilot-approved rotorcraft, by not permitting peripheral systems to be connected to it. In addition, equipment must not be connected to operating systems for the second pilot's required instruments unless it is extremely improbable that failure of such additional equipment would affect that operating system. Similar provisions are also included in § 29.1333.

(vi) Advanced Display Systems. The increased use of microprocessor technology in avionic systems has resulted in the use of computer-generated graphics to replace conventional electromechanical instruments. These displays may replace individual instruments or may integrate several flight critical parameters into single displays. For display of redundant information, "crosstalk" between the pilot and copilot displays and supporting systems has been allowed to provide detection and annunciation of faults or "miscompare" of critical flight information. A level of safety finding equivalent to that level of safety provided by Part 29, Appendix B, VIII.(b)(5)(i) through (iii) may be possible through the implementation of integration technology that will assure that failure of one system does not and can not adversely affect the other system. For those installation designs that employ integration technology, adequate system testing and any analysis necessary must be conducted to assure that failure of

one system will not adversely affect the other system when demonstrating compliance to the minimum safety level established by Part 29, Appendix B, VIII.(b)(5)(i) through (iii) and § 29.1333.

(9) IMC Evaluation.

(i) As part of the flight test program, new rotorcraft undergoing IFR certification should be flown in the air traffic control system in actual day and night instrument meteorological conditions. Items for consideration during the IMC evaluation include:

(A) Ability of the rotorcraft to safely operate in the National Airspace System, including crew capabilities to cope with probable malfunctions. Examples of failures imposed during this IMC evaluation on previous programs are shown below:

(1) Hydraulic failure;

(2) Individual COMM, NAV, or intercom failure;

(3) Engine failure;

(4) Loss of any power input;

(5) SAS failure;

(6) Trim failure; and

(7) Individual failure of each vertical and directional gyro.

(B) Visibility during low approach conditions in precipitation.

(C) Glare and reflections at night in clouds.

(D) Workload demands on the minimum flightcrew including the failures in paragraph AC 27 Appendix B b(9)(A).

(E) Handling qualities in turbulence throughout the IFR approved envelope including typical IFR flight maneuvers;

(1) With reasonably anticipated SAS failures;

(2) With reasonably probable control system failures (hydraulics, force trim, basic ship systems, etc.);

(3) With the typical workload conditions associated with operating in high density traffic areas; and

(4) With other reasonable, probable failures.

(F) Cockpit leaks in precipitation which affect pilot efficiency, safety, or rotorcraft airworthiness.

(ii) Rotorcraft that are an improved, modified, or later model of previously approved type that have no significant changes in the fuselage and windshield configuration, the aircraft lighting system, and the rain removal systems do not need to be flown in clouds. They may need to be evaluated in clouds if, in the judgment of the flight test personnel, there is some doubt as to the similarity of the configuration. However, a previously approved rotorcraft undergoing IFR certification tests for a different SAS should not require a series of actual IFR flights just to determine pilot workload or whether it can be flown in clouds.

(10) Static Position Error. The static position error should be reevaluated to determine altimeter error during instrument approach conditions. This is particularly important when high angle approaches (above 3°) are approved. Static position error for 3° approaches can typically be approximated by the level flight error. The direction of error is important. If the indicated value is lower than actual value, the error is in a conservative direction and further investigation may not be required. The direction and magnitude of static position error should be determined for steep angle approach conditions and additional information provided when necessary in the Rotorcraft Flight Manual. An investigation of static system response during the go-around transition should be investigated.

(11) Cross Coupling. IFR handling qualities are enhanced by providing low levels of coupling between axes. During the flight evaluation, pilots should be alert for strong cross coupling tendencies between yaw and pitch, heave (collective) and pitch, heave and roll, or roll and pitch. Any strong coupling effects between these motions may produce unacceptable handling qualities for IFR flight. The rotorcraft should be able to make a smooth transition from any flight condition. As an example, large rolling or pitching moments with collective application would represent questionable handling characteristics for the IFR missed approach condition.

(12) Electrical, Avionics, and Instruments. Some aircraft have been certified with different equipment from that suggested in this subparagraph because the certification criteria for IFR has evolved in several stages. The following guidance refers to the latest certification requirements:

(i) Additional Avionics/Instruments. The avionics/instrument required for IFR certification beyond those required by § 27.1303 should be as follows:

(A) Standby Attitude Indicator. Power for operation and lighting must be independent from the rotorcraft electrical generating/starting system. Operation must be maintained for 30 minutes after total aircraft electrical power generating system

failure. For dual pilot configurations, one pilot's primary indicator may be designated for this purpose, provided standby batteries are provided.

(B) Alternate Static Source. An alternate static source with a means of selecting this source must be provided for single pilot configurations.

(C) Direction Indication. Gyro Stabilized. Magnetic in place of non-magnetic required by § 27.1303(h).

(D) Navigational Systems. Navigational systems required by the applicable operational rules must be provided.

(E) Communication Systems. Communication systems required by the applicable operational rules must be provided.

(F) Other electrical/electronic equipment. Other electrical/electronic equipment required by the applicable operational rules must be provided.

(ii) Electrical Power Availability for Avionic and Instrument Systems. Minimum avionic and instrument systems should remain operative after electrical power failures in relation to IFR operation. The lists that follow suggest the minimum Avionic and Instrument Systems that should remain operational after a single failure of the generating system and after failure of all but the emergency power source. These lists do not address the basic equipment required for non-IFR related operation. These basic equipment requirements are addressed by the appropriate paragraph of this AC.

(A) Avionic and instrument systems that should remain operational, for IFR approved rotorcraft, after a single failure of the electrical generating system. The rotorcraft must be capable of IFR flight to destination and alternate airports. The suggested minimum avionic and instrument systems are as follows:

(1) Flight Instruments. Same as § 27.1303 requirements, except as defined by subparagraphs AC 27 Appendix B (12)(i)(A) and (C).

(2) Communications. One VHF radio.

(3) Navigation System. One navigation system, including necessary sensor inputs such as directional gyros.

(4) Transponder.

(5) ICS System. Required for two pilot approval.

(6) Instrument Lights (or equivalent).

(B) Avionic and instrument systems that should remain operational, for IFR approved rotorcraft, after total failure of the electrical generating system. The rotorcraft must be capable of flight for a minimum of 30 minutes. The suggested minimum equipment is as follows:

(1) Magnetic Compass.

(2) Airspeed-Altitude Attitude Presentation.

(3) Communications One VHF System.

(4) Instrument Lights (or equivalent).

(5) ICS System-For Two Pilot Approval.

(iii) Directional Instruments. A magnetic, gyro stabilized direction indicator is specified because navigation in instrument flight must be precise. In rotorcraft, the nonstabilized magnetic indicator is subject to many errors, particularly in turbulence. Therefore, it is inappropriate as the primary source of directional information, but it is adequate as an emergency source. A nonslaved directional gyro is also inappropriate as the primary source of directional information because of drift and the requirement to set it to some other precise reference.

(A) As a minimum for single pilot IFR, a nonstabilized magnetic indicator (such as a “whiskey compass”) and a magnetic gyroscopically stabilized direction indicator system (slaved) are required.

(B) The minimum for dual pilot certification includes the instruments required for single pilot, and an additional independent gyroscopically stabilized directional indicator system (slaved or unslaved).

(13) IFR Electrical System.

(i) General.

(A) The entire electrical system, both AC and DC portions, should be reviewed with IFR operation in mind. This review is necessary since most of the rotorcraft presently certificated do not include IFR operation as part of their certification. Many aspects of normal operation and results of failure conditions may be entirely acceptable for VFR operation but unacceptable for IFR operation.

(B) Provisions should be made for a capability to continue flight to destination and alternate airports in the event of a single failure in the electrical system. Paragraph AC 27.1351 contains the definition of a “single failure.” The evaluation of the system under failure conditions should consider not only the failure itself, but also the recommended cockpit procedure to respond to any failure.

(C) The fault analyses of the electrical system and the results of the system testing to validate that analysis serves as a good starting place for the electrical system review. Failure of each generator, each battery, and each component, such as switches and relays, should be accounted for first since failure of equipment and components are the most probable.

(D) System failure such as tripped circuit breakers, blown fuses, loss of busses, loss of feeders, loss of ground terminals, and failure of electrical disconnect plugs should also be considered.

(E) Routing of all wiring from each power source throughout the distribution system should be reviewed. In all instances feeder wires should be routed separately from small gage control wiring. Also, wiring for each power system should be separated to the maximum extent practical from the wiring associated with other required power systems.

(F) A single electrical disconnect plug should not contain wiring for more than one generating system. Many systems incorporate automatic feeder fault protection that disables a power source experiencing a short circuit on its feeder, and in some instances passive protection has been provided for the feeders.

(G) There may be other failures that should be considered that are peculiar to the specific design being evaluated and, if so, an appropriate accounting of these failure should also be made.

(H) Single engine rotorcraft that are being upgraded from VFR to IFR will require careful evaluation of the electrical system. These aircraft normally do not have distribution systems that can tolerate bus or feeder failures, and these failures would result in loss of the entire electrical system. Normally these systems are modified such that distribution system and power supply failures will only result in a partial loss of electrical capability. The power supply problem has been accounted for by the installation of a second generator in some instances or by adding extra battery capacity in others. When an extra battery is added, or a larger battery is substituted, the ampere-hour capacity should be based on one-half the time associated with a worst case maximum flight duration consideration. Additionally, in all instances so far the standby attitude system has been provided a separate power supply capability, in addition to the extra power supply capability described above.

(ii) Review of Regulations. The airworthiness regulations concerning electrical systems begin with § 27.1301 (Ref: Subpart F - Equipment) and continue through § 27.1401. Other rules may also concern the electrical system; however, compliance with these sections should have been assured as part of the original VFR approval.

(iii) Specific Emphasis Areas. In some previous installations, changes have been necessary in the areas listed below. Future installations should be checked carefully in these areas and other areas that indicate a need for attention.

(A) Systems Affected by Icing. Gross inaccuracies in altitude and airspeed indicators resulting from icing could be disastrous in IFR flight. For rotorcraft not equipped with approved alternate static sources, static ports should be carefully evaluated and should either be heated or an analysis verified by flight test data submitted to substantiate leaving them unheated. Static line routing should be carefully evaluated for low spots. Also, if static ports are on the side of the rotorcraft, the lines should be initially routed upward just behind the static ports, then down to a drain. If the lines are initially routed upward, the lines will not fill with water when the rotorcraft is flown through rain or is washed.

(B) Overvoltage Protection. A few rotorcraft may have this protection, but many do not. Since overvoltage protection is specifically required for IFR operation, the rotorcraft's basic electrical system should be very carefully reviewed for this capability.

(C) Power Adequacy Indication. Most flight instruments that use a power supply have a visual means integral with the instrument to indicate the adequacy of the power being supplied. For those required flight instruments that are not provided with a visual means, the following should be accounted for:

(1) The visual means provided should be at least adjacent to the instrument.

(2) The visual means should be adequately placarded.

(3) The power should be measured at or near the point where it enters the instrument.

(4) For electrical instruments, the power is considered to be adequate when the voltage is within approved limits. The source of power for the visual means of indication must be independent of the source of power for the instrument itself. Independent, in this case, means a separate circuit protective device and a separate distribution system bus.

(D) Multiple System Separation. Multiple systems performing the same function are required in certain instances because it is probable that a single system will fail. Separation of such systems would preclude a single fault from causing a multiple system failure. The following should be considered:

(1) When possible, cable routing should be accomplished to ensure the maximum separation; for example, one system routed on one side of the rotorcraft and the other system on the opposite side. Some areas, such as pedestals, junction boxes,

and equipment racks bring systems close together, and in these areas physical separation may be minimal.

(2) Systems that are required to be duplicated should not be routed through one electrical disconnect plug.

(3) System grounds should be evaluated to assure wiring for two required systems is not grounded to the same terminal. If a terminal strip contains grounds for multiple systems, it should be grounded to the rotorcraft's airframe in two places from two separate terminals.

(E) Circuit Protective Devices. All systems that are "required" for IFR operation are considered to be necessary for safe IFR operation, and the circuit protective devices for those systems should generally be accessible to the crew in the cockpit so they can be readily reset or replaced in flight. The location of the generator field protective devices has been a problem in some rotorcraft. The protective devices that can result in the loss of a required power system should be accessible in the cockpit. This position is further supported by the occurrence of nuisance opening of circuit protective devices in rotorcraft. Further discussion on this issue is included in paragraph AC 27.1357b(4).

(F) Intercommunication System. All audio for the entire rotorcraft comes together at this system. An evaluation should be made to ensure that no single failure will result in the loss of all audio for the rotorcraft. Check for common grounds, common connectors, etc. Power inputs should also be disabled.

(14) Rotorcraft Flight Manual Material.

(i) In addition to other required information, the limitations section of the Rotorcraft Flight Manual (RFM) or RFM Supplement must include the approved IFR flight envelope, minimum IFR crew requirements, the minimum required equipment for dispatch into IFR conditions that is not covered by the operating regulations, and the maximum approach gradient which has been approved. If a significant loss of altitude is experienced in any flight regime or maneuver during certification analysis or testing, the emergency operating procedures should include a statement of this altitude loss along with any other appropriate information.

(ii) The limitations section of the Rotorcraft Flight Manual should not include restrictions prohibiting external cargo operations. These operations are covered by Parts 91 and 133 and all external load operations conducted under these parts must be approved by the controlling operations inspector. It is the responsibility of the operator to demonstrate, and the operations inspector to confirm, that any external load operation, including en route IFR, can be safely conducted.

(15) Rotorcraft Flight Below Instrument Flight Minimum Speed.

(i) The advent of steep angle, decelerating precision instrument approach procedures will necessitate flying at airspeeds below the instrument flight minimum speed (V_{MINI}) established for most rotorcraft under FAR 27 Appendix B, paragraph 22(c).

(ii) Applications for findings of equivalent safety to approve instrument flight below V_{MINI}, will be considered by the FAA/AUTHORITY for rotorcraft meeting at least the following criteria:

(A) The rotorcraft is certified for IFR flight.

(B) For constant airspeed approach approval: a minimum approach airspeed is specified by the applicant, at which the rotorcraft is demonstrated to be safely controllable and capable of instrument flight without undue pilot effort for the duration of the approach and transition to missed approach, including acceleration to an airspeed above V_{MINI}.

(C) For decelerating approach approval: a two or three cue flight director is provided as required equipment, and the rotorcraft is demonstrated to be safely controllable and capable of instrument flight without undue pilot effort for the duration of the approach and transition to missed approach, including acceleration to an airspeed above V_{MINI}.

(D) The rotorcraft is demonstrated to be safely controllable following single failures of aircraft systems not shown to be extremely improbable at the minimum approach airspeed specified by the applicant or encountered during a decelerating approach.

(E) The Rotorcraft Flight Manual Supplement (RFMS) contains the following information in addition to the requirements of paragraph IX of Appendix B to FAR 27:

(1) Minimum approach airspeed, if applicable.

(2) Additional aircraft equipment requirements for flight below V_{MINI} and/or the minimum approach airspeed, if applicable.

(3) Maximum approach angle.

(4) Maximum allowable surface wind for safe conduct of the approach.

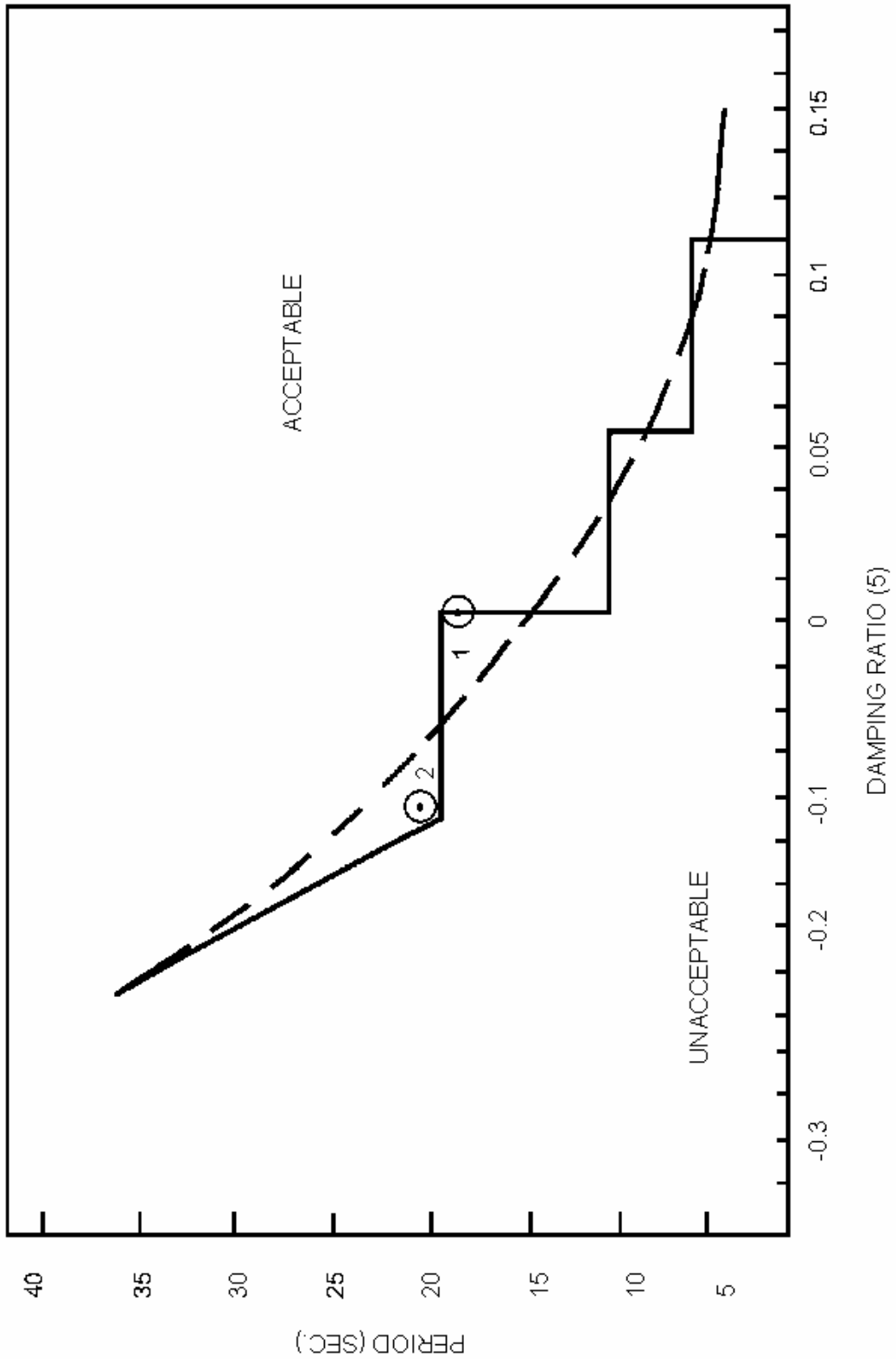

FIGURE AC 27.APX B-1 ROTORCRAFT DYNAMIC STABILITY REQUIREMENTS FOR IFR

[See new addition to AC 29 Apndx B (dated 9/17/2009) posted as a separate document in RGL with this Master AC.]