SUBPART E - POWERPLANT

Section 2. Fuel System

Page No.

SECTION 25.951 GENERAL. ..... SUB. E-2-2

SECTION 25.952 FUEL SYSTEM ANALYSIS AND TEST. ..... SUB. E-2-10

SECTION 25.953 FUEL SYSTEM INDEPENDENCE. ..... SUB. E-2-59

SECTION 25.954 FUEL SYSTEM LIGHTNING PROTECTION. ..... SUB. E-2-67

SECTION 25.955 FUEL FLOW. ..... SUB. E-2-72

SECTION 25.957 FLOW BETWEEN INTERCONNECTED TANKS. ..... SUB. E-2-78

SECTION 25.959 UNUSABLE FUEL SUPPLY. ..... SUB. E-2-81

SECTION 25.961 FUEL SYSTEM HOT WEATHER OPERATION. ..... SUB. E-2-88

SECTION 25.963 FUEL TANKS: GENERAL. ..... SUB. E-2-95

SECTION 25.965 FUEL TANK TESTS. ..... SUB. E-2-104

SECTION 25.967 FUEL TANK INSTALLATIONS. ..... SUB. E-2-109

SECTION 25.969 FUEL TANK EXPANSION SPACE. ..... SUB. E-2-112

SECTION 25.971 FUEL TANK SUMP. ..... SUB. E-2-115

SECTION 25.973 FUEL TANK FILLER CONNECTION. ..... SUB. E-2-118

SECTION 25.975 FUEL TANK VENTS AND CARBURETOR VAPOR VENTS. ..... SUB. E-2-121

SECTION 25.977 FUEL TANK OUTLET. ..... SUB. E-2-126

SECTION 25.979 PRESSURE FUELING SYSTEM. ..... SUB. E-2-130

SECTION 25.981 FUEL TANK TEMPERATURE. ..... SUB. E-2-142

Subpart E - POWERPLANT

Section 2. Fuel System

Section 25.951 General.

(a) Rule Text:

(a) Each fuel system must be constructed and arranged to ensure a flow of fuel at a rate and pressure established for proper engine and auxiliary power unit functioning under each likely operating condition, including any maneuver for which certification is requested and during which the engine or auxiliary power unit is permitted to be in operation.

(b) Each fuel system must be arranged so that any air which is introduced into the system will not result in-

(1) Power interruption for more than 20 seconds for reciprocating engines; or

(2) Flameout for turbine engines.

(c) Each fuel system for a turbine engine must be capable of sustained operation throughout its flow and pressure range with fuel initially saturated with water at 80°F and having 0.75 cc of free water per gallon added and cooled to the most critical condition for icing likely to be encountered in operation.

(d) Each fuel system for a turbine engine powered airplane must meet the applicable fuel venting requirements of part 34 of this chapter.

(Doc. No. 5066, 29 FR 18291, Dec. 24, 1964, as amended by Amdt. 25-23, 35 FR 5677, April 8, 1970; Amdt. 25-36, 39 FR 35460, Oct. 1, 1974; Amdt. 25-38, 41 FR 55467, Dec. 20, 1976; Amdt. 25-73, 55 FR 32861, Aug 10, 1990)

b. **Intent of Rule.** The intent of this rule is to ensure that the airplane fuel system supplies fuel at pressures and flow rates to maintain proper engine and APU function.

c. **Background.**

(1) This rule originated in Section 4b.410 of Civil Air Regulations (CAR) 4b, as Amended in September 1962. Amendment 25-AD (29 FR 18289, December 24, 1964) added Part 25 [New] to the Federal Aviation Regulations and replaced Part 4b of the CAR. It was part of the Agency recodification program announced in Draft Release 61-25, published in the Federal Register on November 15, 1961 (26 FR 10698). Part 25 [New] was published as a notice of proposed rulemaking in

the Federal Register on June 2, 1964 (29 FR 7169), and given further distribution as Notice No. 64-28.

In its initial form, paragraph (a) of this rule required the fuel system to provide fuel at proper pressures and flow rates; and paragraph (b) stated that no fuel pump could draw fuel from more than one tank at a time, and required means be provided to prevent air from being introduced into the system.

(2) Notice of Proposed Rulemaking 68-18 (33 FR 11913, August 22, 1968) proposed to revise paragraph (b) to address hazards associated with air entering the fuel system. The preamble to the Notice discussed the proposed revision as follows:

> Section 25.951(b) provides that no fuel pump can draw fuel from more than one tank at a time unless there are means to prevent introducing air into the system. This is unnecessarily restrictive, and the proposal would limit the requirement to a hazardous amount of air in order to permit greater freedom in the design of the system."

Amendment 25-23 (35 FR 5665, April 8, 1970) followed Notice 68-18 and adopted the proposal. The following excerpt from the preamble to the proposal provides an explanation for the proposal:

> The Notice proposed to amend § 25.951(b) to require the fuel system to be arranged so that hazardous amounts of air cannot be introduced into the system by any fuel pump.
>
> Several comments were received questioning the meaning of the word "hazardous."
>
> The FAA agrees that the word "hazardous" with respect to air in the fuel system is not sufficiently clear. In order to provide the necessary clarification, the word "hazardous" has been deleted and the rule now specifies that any air which is introduced into the system may not result in engine flame out or power interruption for more than 20 seconds.

(3) Notice of Proposed Rulemaking 71-12 (36 FR 8383, May 5, 1971) proposed to move paragraph § 25.977(b) to this section as paragraph § 25.951(c). This change was intended to locate all fuel system icing requirements in one regulation. [The background to § 25.977(b) should be reviewed for additional understanding of the background to § 25.951(c).] This proposal was prompted by a *Flight Safety Foundation Bulletin* that described four incidents of fuel system icing on [certain] airplanes in which icing within the airplane fuel system caused check valves to remain open, resulting in unwanted transfer of fuel. The following excerpt from the preamble to Notice 71-12 provides additional insight into the intent of the regulation:

> "**Proposa**l: Each fuel system must be capable of continuous operation throughout its flow range and pressure with fuel initially saturated with water at

> 80° F and having 0.75 cc of free water per gallon added and cooled to the most critical condition for icing likely to be encountered in operation.
>
> **Explanation:** The current requirements of §§ 25.977 and 25.997 require a means to prevent ice accumulation on the fuel tank outlet filter and strainer. However, they do not provide protection for ice accumulation in other components of the fuel system. Therefore, it is proposed to delete the ice protection requirements from §§ 25.977 and 25.997 and to upgrade those requirements to cover the entire fuel system.

Amendment 25-36 (39 FR 35452, October 1, 1974) followed Notice 71-12 and adopted the proposal. The following excerpt from the preamble to that Amendment discusses comments received in response to the proposal:

> In response to the suggestion contained in several comments, the icing requirement of paragraph (c) of proposed § 25.951 has been reworded to clarify that it is applicable solely to turbine engine aircraft, since fuel icing is peculiar to turbine fuels. Additionally, since the requirement is intended to preclude interrupted functioning of the fuel system rather than to require operation for an indefinite time, the rule has been revised to require "sustained" operation rather than "continuous" operation.

Review of the historical basis indicates that the water contamination requirement in § 25.951(c) was introduced into the Part 25 airworthiness regulations by Amendment 25-36, effective October 1974. The identical requirement was incorporated into Part 23 by Amendment 23-15; into Part 27 by Amendment 27-9; into Part 29 by Amendment 29-10; and into Part 33 by Amendment 33-6.

(4) Notice of Proposed Rulemaking 75-10 (40 FR 1080, March 7, 1975) proposed to revise this section to include APU's. The explanation for the proposal was given as follows:

> Current § 25.951 (a) does not specifically provide fuel system design requirements relating to proper auxiliary power unit operation. The proposal would provide such requirements. [Reference proposal No. 743 of 1974-75 Airworthiness Review.]

Amendment 25-38 (41 FR 55454, December 20, 1976) followed Notice 75-10 and adopted the proposal without substantive change. The following excerpt from the preamble to that Amendment discusses the comments received in response to the Notice:

> **Proposal 2-68.** Two commenters agree with the intent of the proposed § 25.951(a) concerning fuel system design and operation of the auxiliary power unit (APU), but request that it be withdrawn to allow time to review other Part 25 provisions for applicability to APU Installations. The FAA does not believe that a further review of Part 25 should, in this case, delay completion of this rulemaking action. However, if the FAA determines that the language "auxiliary power unit" should be specifically set forth in other provisions to avoid misinterpretation, the FAA will take action to clarify these provisions.

> One commenter states that the fuel system for an APU operated on the ground would be unnecessarily subject to the same requirement as the engine fuel system. The FAA does not agree that this is necessary. If certain operating conditions are the same for both the engine fuel system and the APU fuel system, the FAA believes that the requirements during such periods should be the same.

(5) Notice of Proposed Rulemaking 88-9 (53 FR 18530, May 23, 1988) proposed to add paragraph (d) to this section to require that "*each fuel for a turbine engine installation must meet the applicable fuel venting requirements of Part 34 of this chapter*." Amendment 25-73 (55 FR 32856, August 10,1990) followed Notice 88-9 and adopted the proposal. The following excerpt from the preamble to that Amendment contains a discussion of comments received in response to the Notice:

> Regarding the proposed changes to § *2*5.951(d), two commenters note that the requirements of Parts 23 and 25 apply to the airplane, not the engines. The proposed change offered by one commenter was adopted in the final rule by changing the phrase *"Each fuel system for a turbine engine must . . ."* to the phrase *"Each fuel system for a turbine engine powered airplane must . . ."*

d. **Policy/Compliance Methods.**

(1) Current transport category airplane policy and compliance material for the sections included under "**Subpart E - Powerplant, Section 2 - Fuel Systems**" has been reflected in Advisory Circular (AC) 25-8, "Auxiliary Fuel System Installations, dated May 2, 1986. However, AC 25-8 has been canceled with the issuance of this Propulsion Mega AC and its material has been incorporated in total within the **Policy/Compliance Methods** discussion for § *2*5.952 (see below). The material from that AC should be referred to for general guidance for all rules included under "Section 2 - Fuel System." AC 25-8 material includes acceptable methods of compliance (and in certain cases "required compliance methods"), including:

- drawing and schematic review, together with a compliance (airplane or mock-up) inspection;
- system description;
- ground and flight functional (fuel management/crew workload) demonstrations;
- ground and flight performance tests; and
- supporting analysis.

Consideration can be given to compliance by similarity to prior compliance with an industry standard, if the previous approval is found to be applicable, and satisfactory service experience on a previously approved existing design. The applicant must submit system test proposals that address each system and condition cited in paragraphs § 25.951(a), (b), and (c).

(2) Current FAA policy/compliance methods for paragraph § 25.951(c), *Fuel Icing Substantiation*, includes conducting a fuel system's test in accordance with Aerospace Recommended Practice (ARP) 1401, "Aircraft Fuel System and Component Icing Test," Revision A, December 1997, with the volume of water specified in section § 25.951.

(a) The following excerpt from an FAA Issue Paper, which was applied to a foreign certification project, discusses additional background and compliance methods for paragraph § 25.951(c):

> **Subject:** Fuel System Water Tolerance - Compliance with § 25.951(c)
>
> **Statement of Issue:** During review of the [*airplane*] fuel system design, the applicant questioned the technical justification for the water contamination levels defined within § 25.951. Data presented by the applicant showed that actual water contamination levels that were measured during the flight test program were well below those defined within this regulation and they believe the regulation is overly conservative. During a meeting between the FAA and the applicant, the applicant requested that the FAA review the basis of the regulation and provide guidance on acceptable means of fulfilling this requirement. The purpose of this Issue Paper is to explicitly define, for the applicant's benefit, acceptable methodologies for showing compliance to this requirement.
>
> **Background:** The [*manufacturer's*] previous airplane designs have been validated to meet design requirements for fuel system tolerance to water by evaluation utilizing full scale flight testing. Water concentration levels within the airplane fuel system have been significantly lower than the current § 25.951 regulatory requirement. The applicant believes that the levels defined in § 25.951 are impractical to achieve during full scale testing and do not represent actual in-service water contamination levels.
>
> Review of the historical basis indicates that the water contamination requirement in § 25.951 (c) was introduced into Part 25 airworthiness regulations by Amendment 25-36, effective October 1974. The identical requirement was incorporated in Part 23 by Amendment 23-15, in Part 27 by Amendment 27-9, in Part 29 by Amendment 29-10, and in Part 33 by Amendment 33-6. The basis for the required tests and water contamination values were developed from icing tests conducted by U.S. industry in the 1950's for the U.S. military. Review of the preamble to these amendments showed that several commenters expressed doubt that it should be necessary to add any water to saturated fuel since upon cooling the saturated water would precipitate out, thus representing the most critical condition. The FAA did not agree that the amount of water that may precipitate out properly represents the most critical amount of free water possible in the system. The added water was deemed necessary to simulate critical conditions. In 1979, the Society of Automotive Engineers (SAE) developed an Aerospace Recommended Practice (ARP) #1401, titled "Aircraft Fuel System and Component Icing Test," that describes methods that have been found to be acceptable for showing compliance to this regulation. (Note: The amount of free water specified by the original ARP was less than that specified within the regulation to show compliance. This ARP was revised in 1997 and includes the amount of free water required in the regulation)
>
> Compliance with this regulation has historically been shown by either full scale test or analytical methods supported by component testing. Full scale testing

> requires that the airplane be loaded with fuel saturated with water at 80° F and the additional free water added. To achieve the required water concentration and fuel temperatures the fuel is typically pre-conditioned prior to loading into the airplane fuel tank. Environmental conditions and the flight test profile during the test must be such that the fuel system is operated with the fuel cooled to the most critical condition for icing likely to be encountered in operation for the airplane type. For larger complex fuel systems, multiple test flights may be needed to achieve the desired fuel cooling profile and to test each fuel tank and/or fuel feed configurations. Because of the difficulty in evaluating all potential critical conditions, in many cases applicants have utilized analytical evaluations and component testing to show compliance with this requirement.
>
> Compliance utilizing analytical techniques historically has required that each component of the fuel system be tested utilizing test methods such as the SAE ARP 1401 with the water concentration levels specified within the regulation. The fuel system is then analyzed to show that no water traps exist where free water would accumulate and cause component or system malfunction. Examples of fuel system malfunctions that have occurred include build-up of water behind check valves and subsequent inability to open the valve when needed, ice formation in fuel pump bypass ports, ice formation in low points within the fuel lines without provisions for draining of water, etc.
>
> As discussed in Section 25.977, the FAA has accepted fuel pump inlet screens as meeting the icing requirements if the screen has a minimum mesh of 4 mesh per inch.

(b) An accepted alternative method of demonstrating compliance with § 25.951(c), other than the fuel system test with water entrainment, has been the fuel system design along with a requirement to add to the fuel approved anti-icing additives. This subject is addressed later in this section.

Section 33.67 (4)(ii) is equivalent with § 25.951(c). Section 33.67 provides the following additional statement:

> However, this requirement may be met by demonstrating the effectiveness of specified approved fuel anti-icing additives, or that the fuel system incorporates a fuel heater which maintains the fuel temperature at the fuel strainer or fuel inlet above 32° F (0° C) under the most critical conditions.

When heat exchangers are required to show compliance, substantiation of the fuel temperature must be shown by a thermal analysis that is validated by flight test data. Flight crew manipulation of the power levers must not be required to maintain the fuel temperature above 32 degree F. However, a minimum fuel tank temperature limitation within the Airplane Flight Manual is normally required.

(3) Insight into current FAA policy/compliance methods for engine fuel system heater requirements is provided in the following excerpt from an FAA Issue Paper that was issued in 1984.

> **Subject:** Fuel System Ice Protection

Statement of Issue: The applicant has proposed the [*model*] airplane type design be approved without an indicator to indicate the proper functioning of any heater used to prevent ice clogging of fuel system components.

Discussion: The [*model*] airplane engine fuel delivery system incorporates a fuel/oil heat exchanger system. This system performs the dual function of cooling the engine lubrication oil and heating the incoming fuel supply. The heat exchanger system is in continuous operation containing by-pass valves but no thermostatic or direct flight deck controls. The amount of fuel heat available is related to fuel flow and the engine's thrust level. The engine fuel system has been shown to be capable of sustaining engine operation throughout the required flow and pressure range with water-saturated fuel in accordance with § 33.67 as amended by Amendment 33-6 down to a fuel supply temperature of -45° C (-49° F).

FAA Position: The installation of the airplane engines on the airplane must be shown to have no adverse effect on the engine fuel system ice protection provisions. The protection provided by the engines' fuel heaters must be shown to be adequate throughout the operational envelope of the airplane and the engines. If the fuel heating effectiveness is predicated on flight crew manipulation of the power levers, additional cockpit instrumentation and airplane flight manual procedures will be required.

Applicant's Position: The airplane engine incorporates an integral main fuel/oil heat exchanger and a servo fuel/oil heat exchanger. During certification of the engine under part 33, the engine manufacturer demonstrated satisfactory sustained operation with water saturated fuel in compliance with § 33.67 over the entire operating envelope of the airplane with fuel temperatures above -45°C (-49° F) without the use of supplementary fuel heating or special operating procedures. Therefore, the airplane requires no flight deck indicators or controls for the operation of the engine fuel heating system and no special flight procedures are required.

The fuel temperature limit of -45°C (-49° F) is proposed as a flight manual limitation. The airplane system supplying fuel to the engines is essentially identical to that certificated on the previous model airplane and requires no additional ice protection provisions.

Conclusion: The fuel tank temperature minimum of -45° C (-49° F) has been incorporated in the flight manual as a limitation. This temperature has been confirmed by the New England Region FAA to apply without additional limitations to the engine.

(4) Insight into current FAA policy/compliance methods for the use of anti-icing additives is provided in the following excerpt from Advisory Circular 20-29B, "Use of Aircraft Fuel Anti-icing Additives," dated January 18, 1972.

Use of Anti-Icing Additives: Another method of demonstrating compliance that has been approved is the addition of approved fuel anti-icing additives. AC 20-29B, "Use of Aircraft Fuel Anti-icing Additives," dated January 18, 1972, provides information on the use of anti-icing additives PFA-55MB and MIL-I-27686E as an acceptable means of compliance with the FARs that require assurance of continuous fuel flow under conditions where ice may occur in turbine aircraft fuel systems. If additives are used to show compliance with this paragraph, approval

requires that a limitation be placed in the powerplant section of the data sheet and within the Airplane Flight Manual requiring the anti-icing additive(s).

d. **References.**

(1) Civil Air Regulations 4b, September 1962.

(2) Amendment 25-AD (29 FR 18289, December 24, 1964).

(3) Notice of Proposed Rulemaking 68-18 (33 FR 11913, August 22, 1968).

(4) Amendment 25-23 (35 FR 5665, April 8, 1970).

(5) Notice of Proposed Rulemaking 71-12 (36 FR 8383, May 5, 1971).

(6) Amendment 25-36 (39 FR 35452, October 1, 1974).

(7) Notice of Proposed Rulemaking 75-10 (40 FR 1080, March 7, 1975).

(8) Amendment 25-38 (41 FR 55454, December 20, 1976).

(9) Notice of Proposed Rulemaking 88-9 (53 FR 18530, May 23, 1988).

(10) Amendment 25-73 (55 FR 32856, August 10,1990).

(11) Advisory Circular 25-8, "Auxiliary Fuel System Installations," May 2, 1986 [Incorporated in total in this Propulsion Mega AC at Section 25.952].

(12) Advisory Circular 20-125, "Water in Aviation Fuels," December 10, 1985.

(13) Advisory Circular 20-29B, "Use of Aircraft Fuel Anti-icing Additives," January 18, 1972.

(14) Advisory Circular 20-24B, "Qualification of Fuels, Lubricants, and Additives," December 20, 1985.

(15) Society of Automotive Engineers (SAE) Aerospace Recommended Practice (ARP) 1401, "Aircraft Fuel System and Component Icing Test," March 15, 1979.

Section 25.952 Fuel system analysis and test.

a. **Rule Text.**

(a) Proper fuel system functioning under all probable operating conditions must be shown by analysis and those tests found necessary by the Administrator. Tests, if required, must be made using the airplane fuel system or a test article that reproduces the operating characteristics of the portion of the fuel system to be tested.

(b) The likely failure of any heat exchanger using fuel as one of its fluids may not result in a hazardous condition.

(Amdt. 25-40, 42 FR 15043, March 17, 1977)

b. **Intent of Rule.** This rule is a general fuel system requirement that is intended to require validation, by test and analysis, of proper fuel system functioning under all probable operating conditions, including failure conditions.

c. **Background.**

(1) This section was a product of the FAA's 1974-75 Airworthiness Review. It was initiated by Notice of Proposed Rulemaking 75-19 (40 FR 21866, May 19, 19750, which provided the explanation for the proposal as follows:

> Analysis and, in some instances, tests of the entire fuel system or a facsimile thereof is necessary to disclose problems with the functional interrelationship of portions of the system.

The original proposal for § 25.952(a) included a description of specific conditions that should be considered, which included:

- temperature regulation, fueling, and defueling provisions,
- pressure regulation, and
- fuel transfer provisions.

Amendment 25-40 (42 FR 15034, March 17, 1977) followed Notice 75-19 and adopted the proposal. Comments received in response to the proposal objected to the list of factors in § 25.952(a) concerning the characteristics that a test article must have that is used to reproduce the general fuel system. Commenters felt that, in many cases, the list is not complete and, therefore, could be misleading. Upon further review, the FAA agreed that the specific list of characteristics may not be appropriate in all cases, and explained this as follows:

> The FAA believes that revision of the proposal to require that the test article must reproduce the operating characteristics of the portion of the fuel system to be tested will allow appropriate flexibility in determining the tests that are necessary

> and will eliminate the need for the list of factors which are already included within the term "operating characteristics."

The preamble to the Amendment contained discussions of other comments received, including:

> Several commenters believe that the proposed § 25.952(b) was too restrictive. One commenter suggests that paragraph (b) be revised to read: *"The likely failure of any heat exchanger using fuel as on of its fluids may not result in a hazardous condition."* The FAA agrees that contamination of either fluid does not always result in a hazardous condition and the requirement need not be as restrictive as proposed.
>
> One commenter also comments that proposed paragraph § 25.952(b) should apply only to heat exchangers that are part of the airplane fuel system, and that engine heat exchangers should be controlled by a similar requirement in Part 33. The FAA disagrees. The evaluation whether contamination or other likely failure could cause a hazardous condition can only be determined in a particular airplane installation. Therefore, the proposal is applicable to airplane-furnished and engine-furnished heat exchangers.

Fuel systems analyses and testing are required to validate any failure mode that the system is expected to experience. Additionally, this section in the subpart addresses items of fuel system certification issues such as, but not limited to:

- electrostatic charging of the fuel,
- intermixing of fuel with different Reid vapor pressure,
- establishing conductivity factors,
- crash survivability,
- broken or damaged fuel lines in the center section or auxiliary fuel tank installations, and
- unique environmental considerations.

d. **Policy/Compliance Methods.**

(1) Acceptable methods of compliance (and in certain cases "required compliance methods") with this section include:

- drawing and schematic review together with a compliance (mock up) inspection;
- system description;
- fail safe analysis;
- ground and flight test functional (fuel management/crew workload) demonstrations; and
- ground and flight performance tests and analysis.

Consideration can be given to compliance by design similarity and service experience on an applicants approved existing design or on other model aircraft. The applicant must supply system functioning and test proposals that address each system and condition cited in § 25.952 (a).

(2) FAA guidance and demonstrated compliance methods for the fuel system were originally published in Advisory Circular (AC) 25-8, "Auxiliary Fuel System Installations," dated May 2, 1986. That AC has now been cancelled, however, with the issuance of this Propulsion Mega AC, and its material has been incorporated below:

Advisory Circular 25-8
AUXILIARY FUEL SYSTEM INSTALLATION

1. **PURPOSE.** This advisory circular (AC) sets forth acceptable means, but not the only means, by which compliance may be shown with the requirements of Title 14, Code of Federal Regulations (CFR) part 25, commonly referred to as part 25 of the Federal Aviation Regulations (FAR), pertaining to the installation of auxiliary fuel systems in transport category airplanes. As with all AC material, it is not mandatory and does not constitute a regulation.

2. **SCOPE.** This document provides guidance and criteria for the installation of auxiliary fuel systems, i.e., those which supplement essential fuel systems to provide additional range, in transport category airplanes. It is intended primarily for installations in which the auxiliary fuel is carried within the fuselage, such as within cargo or baggage compartments, the main deck or other similar areas. Although the material presented in this AC is generally applicable to other installations that involve changes in primary structure, aerodynamics or mass distribution, such installations may require extensive additional substantiation that is beyond the scope of this AC. Similarly, additional substantiation beyond the scope of this AC would be required for essential fuel system installations. "Auxiliary" and "essential" fuel systems are defined in more detail in Appendix 1 of this AC.

3. **BACKGROUND**. Currently, many applications for supplemental type certificates (STC) and amended type certificates are being received by a number of the FAA aircraft certification offices for incorporation of additional fuel capacity in existing certificated airplanes. The design and safety concepts for fuel storage and transfer proposed in these applications vary considerably. In addition, some auxiliary fuel system installations are being used for control of the center of gravity (C.G.), which results in fuel usage late in the flight profile. These factors, coupled with the differing requirements that each existing airplane fuel system imposes, complicate an evaluation of the safety and airplane compatibility of the proposed installation.

4. **GENERAL.** Before determining the auxiliary fuel system configuration and modifying the airplane, the applicant should become familiar with the existing airplane structural and systems characteristics and functions, and with the applicable certification requirements. To avoid structural and systems compatibility problems, a working knowledge of the airplane is essential. In particular, the applicant should determine the effects of the addition of the auxiliary fuel system on payload, C.G., system and airplane operations and structural margins. When in doubt about any certification

requirement, the applicant should consult with the FAA aircraft certification office responsible for his project early in the design program to avoid possible costly changes late in the program.

5. **CERTIFICATION BASIS.**

a. New Type Certificates. For the issuance of a new type certificate, an airplane must be shown to comply with the certification basis established in accordance with § 21.17 of Title 14, Code of Federal Regulations (CFR), commonly referred to as the Federal Aviation Regulations (FAR). If the regulations do not provide adequate or appropriate standards because of a novel or unusual design feature, Special Conditions may be prescribed in accordance with § 21.16.

b. Other Design Changes. For other design changes, such as the addition of a new model to an existing type certificate or modification of an existing model, the airplane must be shown to comply with the certification basis established in accordance with § 21.101. Generally, the applicant may choose compliance with the regulations incorporated by reference in the type certificate (the original certification basis) or with the applicable regulations in effect on the date of the application for approval of the auxiliary fuel system (current rules). If the original certification basis does not provide adequate or appropriate safety standards because of novel or unusual design features, compliance with current rules may be prescribed in accordance with § 21.101(b). If neither the original certification basis nor current rules provide adequate or appropriate standards, Special Conditions may be prescribed in accordance with § 21.16. Although sections of Part 25 are referenced in this AC, the references should be interpreted to be the corresponding sections of Part 4a or 4b of the Civil Air Regulations (CAR) when Part 4a or 4b is the original certification basis.

c. Unsafe Features or Characteristics. Notwithstanding compliance with the established certification basis, § 21.21 precludes approval if there is any feature or characteristic that makes the airplane unsafe. The applicant should recognize that it may be necessary, because of such a feature or characteristic, to impose special requirements which exceed the standards of the certification basis, to eliminate the unsafe condition.

6. **PROCEDURES.** In order to avoid delays and possible expensive redesign, it is strongly recommended that the following procedures be followed. The applicant should:

a. Submit a proposed overall certification plan that identifies the essential steps or actions and the sequence anticipated for submitting reports, drawings, process specifications, analyses, tests and other documentation to complete the installation approval. This program should include the proposed or target schedule for the FAA approval tests and inspections required.

b. Generate a certification test plan, which describes the analytical procedures or qualification testing to be used to demonstrate the design adequacy. Each plan should list the applicable regulation and describe how each requirement will be met. In addition, the plan should include a description of the airplane or test articles to be used, drawings, method of production simulation (if applicable), and the target date for installation and test. The certification test plan should be submitted for review and concurrence by the appropriate FAA aircraft certification office prior to initiation of tests, to prevent certification delays.

c. Obtain FAA concurrence that each certification test plan is adequate.

d. Obtain FAA conformity inspection of the test installation.

e. Schedule and conduct the ground and flight test(s) with FAA witnessing.

f. Submit a final test report describing all test results and obtain FAA approval.

CHAPTER 1.

Fuel System Installation Integrity and Crashworthiness

1. **STRUCTURAL INSPECTION.**

a. General. Survivable accidents have occurred at vertical descent velocities greater than the 5 feet per second (f.p.s.) referenced in § 25.561. The energy from such descents is absorbed by the structure along the lower fuselage. As the limits of survivable accidents are approached, structure under the main cabin floor is crushed and deformed and the volume below the floor, where the auxiliary fuel tanks are frequently located, may be reduced and reshaped. For this reason the tank material chosen by the applicant should provide resilience and flexibility; or, in the absence of these characteristics, the tank installation should provide extra clearance from structure that can be crushed or be protected by primary structure not likely to be crushed. If lightweight composite structure with brittle failure characteristics is chosen, compliance with current regulations or Special Conditions may be required.

b. Design Criteria and Structural Loads (§§ 25.25, 25.365, See 25.561, 25.963 and 25.965).

(1) The extent of structural substantiation required depends on the magnitude and location of the added fuel and the modifications required to accommodate the fuel tank installation. Generally, evaluation of the tank attachment hardware and local structure will be sufficient; however, as noted earlier, installations that involve changes to primary structure, aerodynamics or mass distribution may require additional extensive substantiation that is beyond the scope of this AC. Any increase in maximum weight or changes in C.G. limits to increase the utility of the airplane with the auxiliary fuel system installed is also beyond the scope of this AC.

(2) The tank design should isolate the tank from airframe induced structural loads and from deformations induced by the wing and fuselage.

(3) The fuel tank and its attachment and support structures must be designed to withstand all design loads, including the emergency landing load specified in § 25.561(b).

(4) Fuel loads included in the structural substantiation should be based on the most critical density of the fuels approved for use in the airplane.

(5) A particular fuel tank design may require cyclic pressure testing its service life limit using appropriate scatter factors.

(6) In accordance with the requirements of § 25.963(d) regarding retention of the auxiliary fuel, it should be shown by a crashworthiness analysis or the equivalent that the airplane lower fuselage and auxiliary fuel tank supporting

structure are capable of withstanding the crash loads found in § 25.561. Dynamic loads defined by the crashworthiness analysis should be accounted for in the stress analysis.

(7) Sufficient vehicle structural crush distance should be available to avoid auxiliary fuel tank ground contact under the loading conditions of § 25.561(b). Compliance may be shown by analysis and where necessary by test. The analysis should identify the failure mode and define the interaction between the tank and adjacent structure and between adjacent tanks.

(8) Structural deformation must be shown to be controllable and predictable, as required by § 25.965.

(9) The fuselage forebody and afterbody are limited to design values of distributed loads that cannot be exceeded without extensive resubstantiation and possible modification to primary structure. Trade-offs between passengers, cargo, and fuel may be made provided the allowable floor, bulkhead and local shell loads are not exceeded.

(10) Airplane Flight Manual (AFM) limitations and procedures affecting fuel management may be required to ensure that structural limitations are not exceeded.

(11) Bottom and lower structure that is adequate for tank load distribution and protection against rupture in crash landing should be provided for all tanks. Consideration should be given to eccentricities introduced into the basic airframe from fuel tank attachments.

(12) The following must be considered in the evaluation of the tank and tank support structure in accordance with the applicable certification basis:

(i) Tank internal pressure developed during malfunction of the pressure shut-off means and pressure induced by engine bleed air (if applicable).

(ii) Applicable load factors, including the effects of cabin pressurization, with maximum fuel in the tank.

(iii) When located inside the pressure hull of the airplane, the tank should be designed to withstand the pressure differential resulting from the pressure inside the tank at maximum cruise ambient altitude and that of the cabin at the maximum pressure relief valve setting.

(iv) When the tank is located inside the pressurized section of the fuselage, the fuselage structure must be strong enough to withstand the pressure differential loads corresponding to the maximum relief value setting by a factor of 1.33, omitting other loads. This is a limit load condition, which requires a safety factor of 1.5 to obtain ultimate loads.

(v) Except as provided in § 25.625(b), a fitting factor of at least 1.15 must be applied to all tank support fittings and their attachment to the tank.

(vi) All probable combinations of fuel distribution in multiple tanks, including slosh, should be accounted for in defining tank structural loads and airplane weight and balance.

(vii) To preclude rupture and provide durability, the face sheet thickness should be sufficient for the applicable load requirements and to prevent accidental damage. Where aluminum is used for these purposes, thicknesses are typically not less than .040 inch for the outer face sheets or .020 inch for the inner face sheets.

(viii) To facilitate inspection and to isolate primary structure from tank corrosion, the tank should generally not be designed as an integral part of the body structure.

c. Structural Modification.

(1) Where existing structure is being modified for the tank installation, adequate reinforcement should be added as necessary to maintain structural integrity equal to or better than the original structure.

(2) Modifications, such as cutouts, tank support attachments, and service openings through exterior skins, should not degrade structural load capability or lead to reduced fatigue capability. If holes must be cut through the pressure vessel for auxiliary fuel system lines, etc., special care should be taken to reseal the penetrations, particularly those affecting the pressure vessel. The fuselage should be pressure tested in accordance with the requirements of § 25.843 if major modifications to the cabin pressure vessel are made.

(3) The effect of the modification on the existing maintenance program, including the structural supplemental inspection program, if applicable, must be considered and appropriate changes made in accordance with 25.1529.

d. Crash Overload. Hard attachment points between the fuel tank and airframe structure restrict relative motion and, in turn, impose high concentrated loads on both the tank and the airframe. In order to limit the magnitude of these concentrated loads, crash load failure points are typically located between the tank and airframe. In addition:

(1) Attachment point loads should be evenly distributed to minimize the possibility of fuel tank rupture.

(2) In the event of an overload condition, the failure should occur at some point between the tank attach fitting and the basic airframe and floor structure to minimize potential body tank rupture. Where possible, the design should prevent failure of the tank support from causing failure of the fuel lines, for the maximum tank displacement that could occur. It may be necessary to incorporate redundant supports or secondary constraint bulkheads to accomplish this.

e. Damage Tolerance and Fatigue Evaluation. Each structural element of the tank structure, which could contribute to catastrophic failure, must be evaluated. Airplanes for which the certification basis includes § 25.571, as amended by Amendment 25-45 or subsequent amendment, must be evaluated using damage tolerance criteria or, as provided by § 25.571(c), by fatigue (safe-life) criteria. Airplanes having earlier certification basis may be evaluated using fail-safe criteria.

(1) For fail-safe design, analysis, tests, or both must show that catastrophic failure or excessive structural deformation, which could adversely affect the

flight characteristics of the airplane, are not probable after fatigue failure or obvious partial failure of a single principal structural element. After these types of failure of a single principal structural element, the remaining structure must be able to withstand certain prescribed loads considered as ultimate loads.

(2) For safe-life design, the structure must be shown by analysis, tests, or both to be able to withstand the repeated loads of variable magnitude expected in service. The evaluation must include the typical loading spectrum expected in service and identification of principal structural elements and detail design points, the fatigue failure of which could cause loss of the airplane.

(3) For damage tolerant design, the structure must be evaluated to ensure that should serious fatigue, corrosion, or accidental damage occur within the operational life, the remaining structure can withstand reasonable loads without failure or excessive deformation until the damage is detected. To achieve this design objective, it is important to draw on test results for design data. Damage-tolerant design is required unless it entails such complications that effective damage-tolerant structure is impractical. Structures for which application of damage tolerance criteria may not be practical include single-load path designs where in-service inspections are not feasible due to comparatively small critical crack sizes (tank hangers, attach fittings, single fuel containment structure, joints, splices, fuel lines, etc.). Where damage-tolerant design is impractical, the fatigue characteristics are established to ensure that the anticipated service life can be attained. The fatigue evaluation should be based on test results. In this regard, the tank should be pressure cycled appropriate to its design life and all significant details should undergo fatigue tests including adjoining structure and supports that contribute to an accurate picture of its deflection pattern. If the tank installation results in increased loads to the airframe, and there is a required structural inspection program, the applicant must provide a damage tolerance design assessment and associated airworthiness limitations. If the airframe is safe-life, fatigue substantiation is required. In any event, more stringent inspections are to be provided where they are needed. Refer to AC 25.571-1, Damage Tolerance and Fatigue Evaluation of Structure, for further guidance concerning damage tolerance.

2. **TANK LOCATION CRITERIA.**

a. Uncontained Engine Rotor and Blade Failure Considerations [§§ 25.571 and 25.903(d)].

(1) The applicant should evaluate the location of fuel tanks and other major fuel system components from the standpoint of the protection afforded against uncontained engine and auxiliary power unit (APU) rotor or blade failures. For this evaluation the applicant should review the information and recommendations given in Advisory Circular 20-128A, “Design Considerations for Minimizing Damage Caused by Uncontained Aircraft Turbine Engine Rotor Failures,” or any superseding FAA guidance material. The applicant should also obtain information about the containment features, which may be incorporated in the particular engines, or APU’s used on the airplane involved. The energy levels of uncontained rotor/blade fragments specified by the engine/APU manufacturer should be used.

(2) The criteria to predict the probable fragmentation scatter, shown in Figure 1, can be used as a generalized guideline. Past service experience has shown

that the expected overall fragmentation zone, for both large and small fragments, lies within a total spread angle of approximately 15 degrees of the plane of any rotor. In many cases fuel tanks and critical system components can be located outside of these fragmentation zones, thereby minimizing the hazards to the system and the airplane. Where locations within engine fragment zones are unavoidable, the applicant should refer to AC 20-128A for information and suggestions regarding possible design techniques to minimize the hazards to the airplane. In any event, installation of these types of systems into already certified airplanes should ensure that the basic airplane safety level is maintained and not degraded.

(3) For certification compliance, a report, which addresses the above considerations, should be prepared and submitted. The report should adequately consider uncontained rotor and blade failures from all engine and APU sources which may effect the integrity of the auxiliary fuel system and show that design precautions have been taken to minimize hazards to the airplane in the event of these failures and that the airplane safety level has not been degraded by the auxiliary fuel tank/system installation.

b. Proximity to High Temperature Ducting and Equipment [§§ 25.609, 25.613(c), 25.981 and 25.1185(a)].

(1) The applicant should evaluate the location of fuel tanks from the standpoint of exposure to heat from other adjacent systems and components. The evaluation should include an analysis of heat exposure due to failure of an adjacent component (for example, the failure of a high temperature pneumatic duct coupling located near the tank). For this evaluation the effects of temperature on the tank allowable stresses should be considered and it should be shown that no hazardous loss of strength or other unsafe condition will result from the heat exposure.

(2) Consideration of the effects of external heat exposure on the fuel in the tank should also be included in this evaluation. In some cases, although the tank structure will satisfactorily withstand heat exposure, heat conduction through the tank wall could elevate the fuel temperature causing unacceptable engine performance or flammability or explosion hazard (see also Chapter 2, paragraph 6h., Maximum Surface Temperatures). For tanks which use flexible bladder cells, the effects on bladder material due to heat conducted through the supporting tank wall should also be evaluated.

(3) For the particular model of airplane under review, identification of all probable heat sources with respect to the tank system location should be provided, and it should be demonstrated that the tank installation will remain safe even after a single failure of the adjacent system. Detection systems or other means which provide adequate overheat indication are acceptable provided sufficient instructions are provided in the AFM to show the interrelationship of the “failed” system to the auxiliary tank system installation.

c. Proximity to Fuselage Break/Separation Points. Fuselage break points (Appendix 1) are typically found at areas of structural discontinuity in the fuselage shell. Where possible, avoid locating the tank and its support structure at these discontinuities.

d. Installations in Cargo and Baggage Compartments [§§ 25.855(b); 25.855(a)(1) and (a)(2); and 25.857].

(1) The various components of an auxiliary fuel system installed in cargo and baggage compartments should be protected from damage caused by shifting cargo. A cargo barrier should be used to separate the auxiliary fuel system from the cargo. The barrier should be designed to contain the maximum cargo loading for which the compartment is approved under all load conditions including the emergency landing conditions. This barrier may be either a rigid or a flexible type. Solid barriers are sometimes installed to totally separate and isolate the auxiliary fuel system from the compartment, resulting in a reduced compartment size. If the barrier is flexible, consideration should be given to deformation or displacement of the barrier when under load. If minimum tension requirements are necessary to maintain the structural integrity of a flexible barrier, the requirements should be specified and conspicuously displayed in the compartment. Finally, the barrier should prevent any type of bulk cargo, particularly slender or sharp objects, from penetrating components of the auxiliary fuel system, and be structurally capable of preventing cargo from contacting the fuel system installation under all load conditions including emergency landing inertia loads. Alternatively, a barrier would not be needed if it can be shown that the fuel tank system shroud or outer wall can offer equivalent protection to the remaining components of the system. In addition, the auxiliary fuel system installation should not adversely affect intercompartmental venting incorporated in the basic airplane.

(2) When the fuel system is installed in cargo and baggage compartments, ensure all material used, including cargo barriers and replacement compartment liners, meet the applicable flammability requirements. The materials in the fuel system and the cargo barrier, if installed, should protect the fuel system from fire or heat from a fire that could occur in the cargo and baggage compartment. As a minimum, a cargo barrier should meet the flammability requirements of cargo and baggage compartment liners.

(3) If the compartment is a Class B compartment, consideration should be given to the required smoke/fire detector and to the access required for a crewmember to fight a fire. If the compartment is a Class C compartment, care should be taken to avoid interfering with or reducing the effectiveness of the approved smoke or fire detector, built-in fire-extinguishing system or ventilation control system. If the compartment is a Class D compartment, consideration should be given to retaining the effectiveness of the ventilation control system and to the prolonged effect of heat from a smoldering fire on the fuel tank system. Classification of the type of cargo and baggage compartment in which the auxiliary fuel system is to be installed should be defined by the applicant and verified by the applicable FAA aircraft certification office.

(4) If holes must be cut through cargo and baggage compartment liners for auxiliary fuel system lines, care should be taken to reseal the liner. If the fuel system is installed in a cargo and baggage compartment and if positive sealing cannot be verified by inspection or localized test, the certified allowable leakage from the compartment should be obtained and evaluated with the auxiliary fuel system total leakage included to ensure that the compartment classification is not affected. This may require a flight test.

(5) When the auxiliary fuel system is designed to be quickly removed, consideration should be given to the method for resealing or plugging holes while the system is removed. Complete maintenance instructions should be

provided detailing the method of removal, resealing and restoring the airplane essentially to its original configuration.

3. <u>AIRPLANE FUEL SYSTEM COMPATIBILITY</u> [§§ 25.901(c), 25.951, 25.953, 25.955, 25.957, and 25.961].

a. <u>Configuration Criteria</u>.

(1) The auxiliary fuel system should be evaluated in conjunction with the essential fuel system to ensure that no hazardous fuel transfer or feed conditions exist. The criteria used to make this evaluation will depend on the type of auxiliary fuel system selected. The requirements for the two primary types of auxiliary fuel systems, the transfer and the direct feed type, vary considerably. The transfer type system supplies fuel from the auxiliary tank to an existing main tank or tanks. The direct feed system supplies fuel, in at least one operating mode, directly to an engine.

(2) The requirements for a direct feed auxiliary fuel system are considerably more stringent than those for a transfer auxiliary fuel system. These requirements, in general, ensure that an uninterrupted flow of fuel at the required pressure and flow rate is provided to each engine for all operating conditions of the airplane. These requirements also address altitude performance effects and low and high temperature fuel aspects as well as providing fuel system independence in at least one configuration. Failure mode and effects analyses (FMEA) are needed to ensure that no hazardous conditions exist due to a failure of the auxiliary system. Continuous engine operation should be verified when the auxiliary tank system is depleted of fuel, to prevent engine flameout or other unacceptable operating conditions.

(3) Transfer type system requirements are not as stringent but do require basic fuel system considerations such as damage to tank and vent lines due to excessive pressure from over filling, high and low temperature fuel effects, transfer rates, drainage, altitude effects, etc. The auxiliary tank depletion characteristics, especially for bleed pressurization type systems, should also be evaluated to ensure air entrainment, overpressure, etc., does not alter main tank performance. The applicant will need to determine when transfer to an essential system tank should be established and whether transfer should be in increments or continuous. The auxiliary tank quantity, flow rates, essential system tank levels, etc., are considerations for when to initiate transfer and should be a part of the AFM procedures.

b. <u>Interface Considerations</u>.

(1) The interface of the auxiliary fuel system and the existing airplane fuel system should be evaluated. Use of existing fuel system lines and manifolds can provide considerable weight savings; however, the functions of these lines should be checked to ensure that the added usage does not conflict with other requirements. For example, auxiliary fuel tanks might be pressure fueled from the existing airplane fueling receptacle(s); however, in many cases, the pressure fueling manifold is also used for emergency fuel dumping or as part of the engine crossfeed system. The use of portions of the original system may create conflicting flow requirements if not thoroughly checked, particularly when a component failure, such as a valve failing to open or close, is involved.

(2) Another example is the use of the existing airplane vent system for venting of the auxiliary tank(s). The existing vents have been sized to maintain acceptable pressure levels during refueling and flight maneuvers. When combining the systems, the applicant should verify that no failure conditions result in an overpressure condition, i.e., during refueling or emergency descent. Some systems may require two phase flow analysis (air venting from one tank and liquid fuel venting from another tank through a combined vent system). If the essential fuel system tanks use flexible tank liners, it may be necessary to show by analysis or test that the combined vent system does not cause any hazardous bladder collapse in the essential system tanks due to rapid descent or other operating condition.

(3) When the auxiliary fuel system arrangement has been determined and the interfaces with the main fuel system established, a total system failure mode analysis should be conducted to ensure that no hidden failures in the system will lead to an unsafe operating condition. Analyze the system for all modes of operation, including venting, pressure fueling, defueling, transfer, engine feed, crossfeed, and emergency fuel dumping. For example, the auxiliary tank system should be designed so that failure of the system will not result in uncontrollable transfer of fuel from the main tank to the auxiliary tank when the main tank system is in its normal operating configuration.

c. Other Considerations. Other systems must also be evaluated for compatibility with the auxiliary fuel system. Ensure that the auxiliary fuel system electrical power demands do not overtax the airplane electrical system. Use auxiliary fuel system cockpit indicators and nomenclature, which are compatible with the existing cockpit displays. Cockpit instrument compatibility is especially important for the two-man crew cockpit, where pilot workload can become a critical factor and should be evaluated for acceptability when required. Adequate cockpit display to indicate auxiliary tank depletion or improper fuel scheduling should be provided and cockpit indication of low fuel state, C.G. unbalance or other unsafe condition should be considered for the particular installation.

CHAPTER 2.

Auxiliary Fuel System Arrangement

4. **GENERAL ARRANGEMENT EVALUATION**.

a. System Layout. In addition to the criteria described in the previous section, consideration should be given to the following:

(1) *Line Routing, Flexibility and Support* (§ 25.993).

(i) General fuel system practices should be adhered to in installing fuel and vent lines. All flexible lines should be adequately supported along the entire line installation length. Ensure that lines will not chafe against control cables, airframe structure or other equipment items. Avoid locating lines near high temperature sources or near electrical wiring. Where close proximity of a fuel line to electric wiring is unavoidable, locate the fuel line so that leakage cannot drip onto the wiring. Ensure that the fuel line is adequately clamped to structure to maintain the required spacing. Do not support wire bundles from fuel or vent lines. If adequate compartment ventilation or fuel line shrouding cannot be

provided, isolation of electrical wiring from fuel lines may require a vapor barrier or a conduit for the wiring. (See Chapter 2, paragraph 4a (4).)

(ii) Consider the crashworthiness characteristics of the line routing. Where possible, interconnect tanks, rigid metal lines and other major fuel system components with flexible lines. Allow sufficient flexible line length to permit some shifting of the components without breaking the lines or connections. The flexibility of the entire fuselage auxiliary fuel line routing should be sufficient to account for fuselage break points. If lines are routed near structural umbers, the effect of "guillotine" or slashing action due to a crash landing should be addressed. When routing fuel lines through cabin floor structural lightening holes is necessary, provide sufficient clearance to prevent line severing due to floor deformations on a crash landing. A crashworthiness evaluation report of the auxiliary fuel system installation should be submitted during certification which shows, by analysis or test, that precautions have been taken to minimize the hazards due a survivable crash environment.

(2) *Fuel Tank and Component Location, Access, Mounting and Protection* 25.901(b) (ii), 25.963, 25.965, 25.993 and 25.994).

(i) Each auxiliary fuel tank or tank module design should be evaluated for the basic requirements of §§ 25.963 and 25.965. These requirements address, for example, the basic integrity of the tank, bladder cell requirements, pressurized tank requirements and the tank tests, such as, slosh and vibration, that may be required.

(ii) As a general rule, all components, such as valves, pressure transmitters or switches, filters, etc., should be directly mounted to the airplane structure or to supports which are directly attached to the structure. If fuel or other system lines or fittings are used to support auxiliary fuel system "in-line" small/lightweight components, it should be shown that this practice does not result in excessive structural stresses when subjected to the vibration and other loads expected in service.

(iii) Although function will dictate the appropriate location of components in the airplane, there is usually some latitude which will allow selection of a specific area that is more suitable than others. Component location should be considered from the aspects of both access and protection. Access is especially important for components that will require routine periodic inspection and maintenance, such as strainers, filters, and drain valves, or components with known short service life expectancy. Where possible, such components should be located in areas where there are currently existing access doors and openings on the airplane. When new access provisions are required, lightning and crashworthiness vulnerability as well as structural security should be considered.

(iv) Locating components in areas where there is a high probability that they can be stepped on or tripped over by personnel during the routine servicing or maintenance of the airplane should be avoided. The crashworthiness of the location should also be considered. Components should not be installed below the fuselage cargo floor if they may be crushed, scraped off, or cause penetration into the auxiliary fuel tank which can result in leakage during a wheels-up landing. Protection from damage due to shifting baggage and other objects that may not be tied

down in the cargo area should be provided. See Chapter 1, paragraph 2d, for cargo barrier criteria.

(v) For components which must be located inside the fuel tanks, the crashworthiness aspects of the installation should be considered. Means to prevent component sharp edges from penetrating the tank surface due to deflection of the surface under crash load conditions should be provided, especially where flexible tank bladder cells are used.

(3) *Tank Penetration Points (Access, Quantity Probes, Float Switches and Fuel Fittings)* (§§ 25.963, 25.973, 25.975, 25.977).

(i) The location and arrangement of all tank penetration points should be considered. Tank penetration points are all locations where openings exist in the tank walls for access (inspection or repairs), for mounting fuel quantity probes, float switches, etc., and for tank venting, drainage and fuel transfer or fueling.

(ii) Auxiliary tanks should have access openings large enough to permit completion of required inspections. Component and line penetrations may be usable as access/inspection openings, dependent on size and location, and should be evaluated for acceptability.

(iii) All tank fuel line to airplane structure attachments should be evaluated for the flight, flight vibration and crash loads that may be transmitted to the tank walls. From the crashworthiness standpoint, to prevent fuel tank fittings from being torn out of the tank wall, it may be advisable to consider the need for frangible disconnect valves or fittings, mounted on the external surface of the tank, which separate and shut off any hazardous fuel flow from the tank in event of a crash. However, a failure analysis must show that inadvertent closure of these frangible fittings will not interfere with continued safe flight.

(4) *Electrical Wiring Routing and Support* (§§ 25.1301 and 43.13). The following practices should be adhered to for wire routing and support; however, in all cases, clearance between wires and fuel or oxygen lines and control cables should be adequate to prevent damage due to deflections of structure or support which may occur during a survivable crash.

(i) A minimum clearance of 3 inches between wires and any control cable should be maintained unless a shield is provided.

(ii) Wires should be located above (preferably), or on a level with, metallic fluid lines. A minimum clearance of 6 inches between wires and combustible fluid or oxygen lines should be maintained whenever possible. Where a 6-inch clearance cannot be maintained, install additional clamps to provide separation. The fluid lines should not be used as a means of supporting wire bundles. Additional clamps should be installed to support the wire bundle and these clamps fastened to the same structure used to support the fluid or oxygen lines to prevent relative motion.

(iii) A minimum separation of at least 1/2-inch should be maintained between noncombustible plumbing lines and any wire.

(iv) Wires and wire bundles should be supported with clamps meeting Specification MS-21919, Clamp, Looptype, Cushion Support, or equivalent.

(v) Where wires or wire bundles pass through cutouts in bulkheads or other structural members, a grommet and suitable clamp should be provided to prevent abrasion if the clearance is less than 1/4-inch.

(vi) Refer to AC 43.13-1A, Acceptable Methods, Techniques, and Practices--Aircraft Inspection and Repair, for more details regarding routing and supporting of wires, acceptable methods, techniques and practices-aircraft inspection and repair.

b. Fuel Containment Secondary Barriers (§§ 25.967, 25.863). For auxiliary fuel systems that are located in the passenger or cargo and baggage compartments (Appendix 1), isolation of the fuel and fuel vapors from other areas of the compartment is of critical importance. Tanks, line fittings, connections and other components, such as valves, pressure transmitters, regulators etc., must be shrouded or provided with redundant barriers such that leaks from any of these sources will not present a fire hazard. Some of the important characteristics of the secondary barrier system are:

(1) The system should be capable of containing and isolating any leakage. To contain any leakage, integrity at the maximum system operating pressure should be demonstrated.

(2) Secondary barrier spaces should be vented and drained in accordance with acceptable practices to prevent the accumulation of fuel or fuel vapor. The drain system also serves as a periodic visual means of detecting any leakage in the auxiliary fuel system. For this reason, shroud drains should not be connected to other types of fluid drain systems.

(3) The secondary barrier drain system materials, construction and sealing characteristics must be compatible with fuel and capable of long life under the altitude/cabin pressure cycling, vibration and wear to which they will be exposed in service.

(4) The drain system should be reviewed from the installation location aspects to preclude the possibility of inadvertent damage by ground personnel or shifting cargo.

c. Tank, Fuel and Vent Line and Component Shrouds (§ 25.967).

(1) Auxiliary fuel tanks installed in a passenger or cargo and baggage compartment should be completely shrouded. This means that all fittings connected to and through the tank walls should also be provided with secondary barriers. Figures 2 and 3 show some acceptable designs for shrouding equipment items and fittings installed on or through the tank walls. Each tank penetration design should be reviewed to ensure a single failure (such as a seal failure) does not result in fuel or fuel vapors entering the compartment. A primary seal with a secondary shroud/seal provides the required protection if indication of a primary seal failure is also provided and the secondary seal is pressure tested periodically.

(2) All vent and fuel fittings and connections in a passenger or cargo compartment should also be shrouded. An example of this is shown in Figure 4.

(3) Valves and other components, unless otherwise protected, can have possible leak paths through shafts and at control motor or solenoid connections or other seals in addition to their line connections, and should be completely shrouded.

(4) Electrically operated components are of particular concern because of the possible need to route electrical leads through the secondary barrier spaces. The space should be considered an abnormal vapor zone containing flammable fluid similar to the interior of the fuel tank. Thus an evaluation of the electrical connector and wiring temperatures should be made for both normal and fault load conditions. It may be necessary from this evaluation to install the wiring in vapor-proof conduit, except where shown to be intrinsically safe.

d. Fuel Tank Secondary Barrier Cavity Venting (§ 25.967). The changes in tank secondary barrier cavity pressure during all airplane maneuvers, including emergency descent, must be accounted for in the design of the auxiliary fuel tank. Bladder type tanks may be critical under emergency descent conditions, depending on the cavity vent line sizing. The vent/drain configuration must provide the required positive and negative pressure relief between the outer shell and the bladder or inner wall to prevent collapse or over expansion of the inner tank. Depending on the location of the overboard vent/drain exit and the airflow characteristics around the exit or exit mast, a flight test may be required to evaluate the emergency descent characteristics of the cavity vent system with the airplane in both the “clean” and “wheels and flaps down” configuration.

e. Other Secondary Barrier Vent and Drain Provisions (§§ 25.954 and 25.967).

(1) All secondary barrier spaces should be vented and drained. The spaces in some designs are manifolded for venting and drainage as shown in the figures in the previous section or are independently vented and drained. In Figures 2 and 3 the tank fitting cavities are ported into the tank shroud cavity proper. In Figure 4 the line fitting shroud vents to the tank fitting cavity; and this cavity, in turn, is vented to the tank shroud cavity. Eventually all cavities must vent and drain to an exit external to the airplane. The overboard exit should be located to prevent fluid reingestion into such areas as the wheelwell and other critical areas of the airplane. On many airplanes there are existing exit drain masts, which are used to vent and drain the secondary barrier cavities of the airplane main fuel tanks or shrouds. The use of these existing drain masts is recommended. The attachment of the auxiliary system drain to the existing airplane drain should ensure that backflow does not occur in either system.

(2) For secondary barriers located in passenger or cargo areas, the cavity vent and drain exit should always be open and vented to ambient pressure. Avoid the use of push-to-drain valves at both ends of the drain to check the cavity condition. Multiple drain outlets utilizing push-to-drain or other type valves should not inhibit venting.

(3) If a new exit mast is required, consider carefully the location and configuration from the standpoint of lightning vulnerability and conductivity (see Chapter 2, paragraph 6b). Drain masts should not be located upstream

of air inlets or other openings in the airplane external surface. Physical inspection by the cognizant FAA personnel of all drain locations on the actual airplane should be accomplished to ensure all interfaces are considered. Verification that liquid discharge from the mast will flow clear of the airplane and not impinge or reenter at another airplane surface should be accomplished by impingement tests conducted in flight. Ensure that freezing does not occur during the tests and that the test results will be representative of a fuel leak.

5. **FUEL SYSTEM CONTAMINATION PREVENTION ASSESSMENT (§§ 25.971, 25.977 and 25.997).** The primary concerns of fuel contamination with respect to auxiliary fuel system design are water and debris contamination. The certification requirements are quite specific, and the installer should be familiar with the requirements of § 25.971, Fuel Tank Sumps, and § 25.977, Fuel Tank Outlets. There may also be a need to refer to § 25.997, Fuel Strainer or Filter. This regulation would be applicable for auxiliary fuel systems which feed fuel to a positive displacement pump which in turn feeds the engine or to some alternate auxiliary fuel tank direct engine feed system. The existing main fuel system design should already satisfy § 25.997 requirements. The installer should, however, verify that these requirements are maintained when an auxiliary fuel system is installed. The following features should be considered with respect to auxiliary fuel system contamination.

a. Fuel Tank Sumps and Fuel Strainers.

(1) *Sump Location and Capacity.*

(i) Sumps should be installed at the lowest point in the auxiliary fuel system with the airplane in its normal ground static attitude. This will allow water in the system to migrate to the sump where it can be drained before flight. The sump may be an integral part of the tank, providing the bottom of the tank is the lowest point in the system, or may be a separate tank specifically installed for sumping purposes. If the sump is a separate tank and located within a passenger or cargo compartment, it should be designed to the shrouding criteria set forth in the previous section for fuel tanks including the overboard drain exit requirements. Separate sump tanks should not be located below the cargo compartment floor if they will be vulnerable to damage in the event of a wheels-up landing.

(ii) Sumps and sump tanks must have the capacity specified in § 25.971. If a separate sump tank is used for a number of tanks or modules that are interconnected together to function as a single tank system, the required capacity of the sump is based on the capacity of the total tank system.

(2) *Sump Drain Provisions*. All sumps should have provisions which allow complete drainage of the sump. These drainage provisions should be carefully designed to provide high reliability in service and a high degree of crashworthiness. Drain valves should be positive locking and reliable. Drain valve installations should provide double seals to prevent overboard leakage from a single seal failure. Lightning aspects of the overboard access should be addressed as discussed in the next section. Locate the drain valve at or near the sump. Do not locate drain valves on the bottom surface of the fuselage or other areas where they may be inadvertently damaged or opened. In passenger/cargo compartments, sump drains should be shrouded in accordance with the provisions described in the previous section

and the shrouds provided with vents per normal shroud procedures. The shrouded fitting between the sump drain and the overboard penetration should provide a “fuse” point or other means to ensure that upward penetration of the tank does not occur during a crash landing.

(3) *Fuel Strainers* (§§ 25.951(c) and 25.977).

(i) One purpose of using a fuel tank outlet strainer is to prevent the intrusion of debris of a size sufficient to damage or jam components downstream of the tank outlet. Fuel strainers of this type should be used in the fuel tank outlets of auxiliary tank systems which transfer fuel by mechanical pump means or which have gravity fuel fillers incorporated, where there is a probability of debris inadvertently entering the tank.

(ii) The mesh or size requirements are defined in § 25.977. However, because of the problem of icing, the effective flow area of the strainer should be selected considering also the requirements of § 25.951(c). Fine mesh screen should not normally be used in this application.

b. Fuel and Vent System Low Points (§ 25.975). Avoid creating low points in routing fuel and vent lines. This condition is usually a problem where long fuselage runs of flexible fuel lines/shrouds are installed. It is particularly important to eliminate low spots in vent and drain lines, where water may collect and freeze, blocking the lines. Unavoidable shallow low areas may be acceptable without drains if fluid can not collect to any appreciable degree. Where traps in the vent system are unavoidable, drains should be installed. Depending on the particular design, these drains may allow the fluid to flow back to the tank. Auxiliary tank vent systems should ensure that fuel sloshing in the main tank vent line does not enter the auxiliary vent system in unacceptable quantities. Where possible, drain lines should be routed to provide continuous down slope to the drain exit so that complete drainage is accomplished with the airplane in the normal ground attitude. If not possible, consider adding sump type drain valves at the applicable low points. Where drain valves are required use the criteria discussed in the previous sections.

6. **IGNITION SOURCE ISOLATION EVALUATION**.

a. System Electrical Bonding (§ 25.863, MIL-B-5087B). All auxiliary fuel system conductive components such as electrical equipment, fuel tanks, lines, etc., should be electrically bonded to airplane structure. If two or more components are grounded in series, both ends of the ground circuit should be grounded to ensure that the loss of an intermediate ground connection will not leave any component isolated from ground. The bonding jumper should be as short as practicable and installed in such a manner that the resistance of each connection does not exceed .003 ohm.

Special emphasis should be placed on bonding when addressing nonmetallic or composite auxiliary fuel tank/systems. The applicable auxiliary fuel system installation drawings should identify the discrete attachment points requiring bonding. The surface treatment(s) required should also be specified by an applicant’s specification(s) which should be submitted to the cognizant certification office during certification. Verification of adequate bonding should be accomplished during installation and when maintenance is performed on the auxiliary fuel system in the airplane.

(1) *Wiring Isolation in Fuel or Fuel Vapor Environment.*

(i) Electrical power wiring in fuel or fuel vapor environment should be adequately protected to prevent damaged wire(s) from igniting fuel/fuel vapor. Installation of the electrical power wiring in a metallic conduit is an acceptable method to meet this criteria. Electrical power wiring is the wiring that is connected to a power source.

(ii) Flexible conduit conforming to Specification MIL-C-6136, Conduit; Electrical, Flexible, Shielded, Aluminum Alloy for Aircraft Installation, Types I or II, or equivalent, may be used where it is impractical to use rigid conduit, such as, areas that have motion between conduit ends or where complex bends are necessary.

(iii) Conduit installation considerations include the following:

(A) Metallic conduit should have a low-resistance bond of less than .003 ohm to airplane structure.

(B) To prevent wire chafing at the conduit ends, suitable end fittings should be installed so that a smooth surface comes in contact with the wire(s) inside. When fittings are not used, flare the end of the conduit to prevent wire insulation damage.

(C) The conduit should be supported by clamps along the conduit run to prevent chafing against structure and to avoid stressing the end fittings.

b. Lightning Vulnerability (§ 25.954). The auxiliary fuel system installation should be evaluated from the standpoint of lightning vulnerability. Some items and areas that may be susceptible to fuel ignition or indirect effects of lightning include, but are not limited to, the following:

(1) Vent outlets, metal fittings and mechanical fasteners inside fuel tanks, fuel filler caps and access doors, drain plugs, tank skins, fuel transfer lines inside and outside of the tanks, and electrical and electronic fuel system components and wiring.

(2) Advisory Circular 20-53A, Protection of Aircraft Fuel Systems Against Fuel Vapor Ignition Due to Lightning, addresses the subject in more detail.

(3) The primary areas of concern for auxiliary systems are all fuselage penetrations, such as protruding masts, access provisions, vents and drains which can be susceptible to a direct strike or corona effects. Details of all attachments, fittings, etc., must be reviewed to ensure there will be no arcing or sparking and that adequate electrical bonding has been provided. Composites in the basic airplane in areas that involve a portion of the auxiliary fuel system installation should also be evaluated for indirect effects. Indirect effects are induced electromagnetic effects which occur from a lightning strike (such as induced sparking in fuel system components or wiring).

c. Protruding Masts.

(1) Because existing vent and drain masts have been designed to reduce lightning vulnerability, it is recommended that they be used for the auxiliary

fuel system also unless such use would compromise their original intended function.

(2) If additional masts or overboard drain lines are required, an evaluation of lightning protection should be conducted.

(3) *Access Protection*. Access doors or caps should provide isolation of the fuel system components (drains, etc.) with respect to lightning. This isolation should prevent transfer of electrical discharge into the fuel system component(s) and channel or dissipate the energy into airplane structure.

d. Vent and Drain Protection.

(1) Generally, auxiliary fuel tank vent systems are integrated with the existing main fuel tank vent system on the airplane being modified. The main tank vent outlets on transport category airplanes have been designed and certified for lightning protection. Where auxiliary tank venting must be provided separately, it is advisable to consult the type certificate holder to determine a satisfactory vent exit location and configuration. In general, flush outlets are preferable instead of masts. Vent outlets should not be located in a direct (Zone 1) or swept stroke (Zone 2) area of the airplane. The entire fuselage is considered within the Zone 2, swept stroke area. Depending on the particular design, flame arrestors may also be required in the vent system proper. Vent system exit design is a critical element of airplane safety and requires a considerable background knowledge of the possible lightning strike zones of the particular airplane being modified.

(2) If secondary barriers are required in passenger/cargo areas, the cavity vents should be designed to the same criteria used for tank vents; i.e., assuming that the effluent is a combustible mixture of fuel and air. Cavity vents should not be combined with or directly ported into any tank vent system. Wherever possible, the cavity venting and draining provisions should be combined as a single function and routed to a single drain mast, preferably an existing main tank cavity drain on the airplane being modified.

(3) Drain valves should be located at or in the lines near the tanks to be drained and not installed on the external surface of the airplane. If tunnels or spaces are required to obtain access to drain valves, the use of nonconductive materials to isolate the valves from possible lightning arc-over or conduction into fuel tanks or fuel carrying components should be considered. Each access configuration should be evaluated for conformance to lightning protection criteria.

e. Bonding for Lightning Protection (§ 25.581).

(1) A minimum of two bonding jumpers should be installed between a conductive tank and the airplane structure.

(2) Individual bonding jumpers should not be less than No. 12 American Wiring Guide (AWG) for stranded copper wire or No. 10 AWG for stranded aluminum wire.

f. Electrostatic Considerations.

(1) The auxiliary fuel system should be evaluated from the standpoint of electrostatic charge build-up. Unless there are means to progressively drain

off the charge, electrostatic potential can build up to hazardous levels (sparking discharge levels) in areas of the fuel system where fuel flow velocities are high or where there is a high degree of fuel agitation. Some of the areas of concern are refueling outlets into the fuel tank, and long lengths of refueling or fuel transfer hoses where the hose material is highly nonconductive to electrical currents. (For example, teflon hose was a problem in this respect until the teflon was formulated with a graphite or other materials to make it more conductive.) High electrostatic potential can persist for long periods after build-up in some cases. Explosions have occurred many hours after refueling when personnel introduced objects at ground potential into the bladder cells.

(2) Electrostatic potential build-up can be reduced in tanks by locating fuel outlets near the bottom of the tanks (to reduce splashing and sloshing) and expanding the outlet fitting to reduce the outflow velocity. Electrically bonding the tank fittings to structure will also help by progressively draining off the charge. Sizing hoses and other components to reduce flow velocities will allow more time for charge relaxation. A long run of electrically nonconductive hose can be broken up using metal fittings or lengths of metal tubing, each grounded to structure, to provide additional area for charge relaxation.

(3) The internal tank coatings can influence the degree of fuel electrostatic charge relaxation. The use of dielectric primer, corrosion protective coatings and painting on internal tank walls should be consistent with the desired overall fuel tank wall conductivity.

g. Component Isolation.

(1) Components located in a fuel or a fuel vapor environment must be designed such that there is no fire or explosion hazard during normal operation or under a failure condition. This should be accomplished by ensuring that the component surfaces will never exceed the minimum surface ignition temperature of the fuel used and that there will be no sparking that could cause ignition.

(2) The designer should refer to AC 25.981-1A, Guidelines for Substantiating Compliance with the Fuel Tank Temperature Requirements. Advisory Circular 25.981-1A discusses the requirements and some of the possible failure situations which can lead to unsafe temperature conditions.

h. Maximum Surface Temperatures.

(1) There is a general industry/FAA practice that a temperature providing a safe margin under all normal or failure conditions is at least 50° F. below the lowest expected auto-ignition temperature of the fuel. The auto-ignition temperature of fuels will vary because of a variety of factors (ambient pressure, dwell time, fuel type, etc.), but the value generally accepted without further substantiation for kerosene type fuels, under static sea level conditions, is 450° F. This results in a maximum surface temperature of approximately 400° F for an affected component.

(2) In general, component manufacturers have conducted qualification tests to certify that their products will meet the above criteria for known conditions of operation or failure. The auxiliary fuel system installer should ensure that the

surface temperature requirements are not exceeded by any component used in the system for any conditions including extended life service and maintenance required on the component. New components should be tested to the above criteria unless such tests have already been conducted by the component manufacturer. In assessing the failure mode conditions of the component, the designer should assess any single failure in combination with an undetectable failure. Failure mode analysis is discussed in Chapter 4, paragraph 12a(1) of this AC.

i. Spark Isolation (Explosion Proofing).

(1) Generally, electrical component manufactures have demonstrated spark isolation or explosion proofing by test where a high intensity spark is intentionally set-off inside the component case with the component immersed in a flammable fuel-air mixture environment. This environment is then ignited to prove its flammability. A test of this type does not depend on the failure mode since the cause of the spark is not important in this situation. However, a failure mode analysis should be conducted to ensure that the test is adequate and will simulate all the actual conditions anticipated in service. For the particular auxiliary fuel system application intended, service life characteristics (such as the degradation of seals with time, etc.) should also be considered to ensure adequate explosion proofing.

(2) For some components, such as fuel quantity probes, safe surface temperatures and explosion proofing can be shown by demonstrating that the circuit energy is less than 0.2 millijoule under normal or any failed condition. Such components are then considered as intrinsically safe with no further substantiation.

CHAPTER 3.

Component Materials

7. **GENERAL**. The applicant is responsible for ensuring the integrity of all materials used in the system. This Chapter describes the material characteristics which have been found important in auxiliary fuel systems. Information and documents concerning material properties and environmental testing requirements can be obtained by contacting the American Society for Testing and Materials (ASTM).

8. **ENVIRONMENTAL PROPERTIES EVALUATION.**

a. Normal Environment Properties.

(1) *Fuel Resistance*. Fuel resistance deficiencies have produced problems in the past.

(i) One problem is the presence of fuel or fuel vapor in air pressurizing systems for auxiliary fuel tanks. Pressurizing components which normally are exposed to air will also, during normal static conditions, be exposed to fuel vapor, especially when the airplane is exposed to solar heating while parked for some period of time. Expansion and vaporization of fuel in the tanks can cause vapor migration through a part of the pressurizing system. A failure of a pressurizing system component can also inadvertently cause exposure to fuel. Seals and

diaphragms in components which make up this system should be fuel resistant.

(ii) Another aspect which should be evaluated is the prolonged effects of fuel exposure. Some materials, certain plastics in particular, which exhibit short term fuel resistance have, over a prolonged period, deteriorated under the influence of fuel or fuel vapor.

(iii) New innovative material applications, such as composites, and new bonding adhesives should be thoroughly tested to determine the long term effects of fuel and fuel vapor exposure. The use of composite materials is discussed in more detail in Chapter 3, paragraph 9 of this AC. Surface treatments, coatings, and sealants intended to reduce weathering and corrosion and seal structural areas should also be substantiated to ensure fuel and fuel vapor resistance, where applicable.

(iv) If a component is life-limited, the limits due to fuel environmental conditions should be defined, particularly for nonmetallic items.

(2) *Fuel Additive Compatibility*. An evaluation should be made of the effects of additives, approved for the airplane, on the components of the auxiliary fuel system. The applicant should substantiate, by suitable methods, that the use of approved additives will not deteriorate these components or restrict the use of specific additives by suitable warning placards on the airplane and notices in the limitations section of the AFM.

(3) *Ozone Resistance.* High concentrations of ozone may be encountered by airplanes at cruise altitudes. Some materials, particularly certain rubber and plastic compounds, are susceptible to ozone deterioration and should not be used in auxiliary fuel systems. In some cases the combined ozone and fuel environment can produce rapid weathering and disintegration of the material. The effects of ozone should be evaluated with respect to the particular auxiliary fuel system design in question. Ozone compatibility should be substantiated using approved methods and specifications.

(4) *Corrosion and Micro-Organism Resistance*. Corrosion in auxiliary fuel systems is primarily due to entrained water in the fuel and the acids produced by the associated microbial contamination. Thus corrosion protection is especially important for tanks, sumps and equipment located in sump areas. Metal tanks and components should be made of materials resistant to corrosion or otherwise suitably protected. Metal combinations (dissimilar materials) which are subject to electrolytic corrosion problems should be avoided. Magnesium, copper, cadmium, and brass should not be used in auxiliary fuel systems as these metals are very active chemically. The combination of graphite layers of composite construction attached directly to aluminum will result in intergranular corrosion and should be avoided. Materials used for bladder cells, seals and composite tanks and fittings should be resistant to microbial contamination. Bladder cells must conform to Technical Standard Order (TSO) C80 or otherwise be shown suitable for the intended application.

(5) *Temperature Range Suitability*. Materials and components used in the auxiliary fuel system must have suitable properties and must perform their intended function throughout the approved airplane operating envelope. In some instances, they may be exposed to temperatures as low as -65° F or

lower and as high as 250° F, or even higher. Some rubber and plastic materials, for example, have excellent flexure properties at room temperature, but become unacceptably brittle at low temperatures.

b. Extreme Environment Properties. Extreme environment properties are those properties a material or combination of materials should have under certain conditions which are not encountered during the routine operating life of the materials. Examples are conditions which may be imposed by component failure or crash environments. An evaluation of the extreme environment properties should account for the following:

(1) *Flexibility and Resilience*. The properties of flexibility and resilience must to a certain degree be considered as a part of the normal environmental condition for flexible liners, flex connections and other components; however, these properties become of critical importance under crash conditions. Flexure and resilience must be considered to ensure fuel containment under these conditions. It may be necessary to demonstrate by test that certain fuel lines and shrouds are sufficiently resilient or ductile to withstand survivable crash load impact without fuel leakage. Materials and parts for rubber fuel lines should provide resilience and flexibility and conform to TS0-C53 or otherwise be shown suitable for the intended application.

(2) *Heat-Strength Characteristics*. The high temperature strength properties of materials used in the auxiliary fuel system should be considered for those components which may be subjected to sources of heat due to the failure of some component in another adjacent compartment or adjacent system. In addition, these configurations should be capable of sustaining the critical flight and landing loads and thus the integrity of the system under these conditions.

(3) *Fire Resistance and Crash Fire Propagation Characteristics*. Auxiliary fuel systems are frequently installed in cargo compartments. By definition, if the tank and component secondary barriers are capable of withstanding a cargo compartment fire such that the safety of the airplane is maintained then the secondary barrier materials are acceptable. These fire resistant characteristics should be equivalent to the liner materials of the compartment in which they are located. For Class B through Class E cargo or baggage compartments the materials must, at least, meet the requirements of 25.853(b) and 25.855(a-1). The system should also be evaluated with respect to materials from the standpoint of toxic gas release under fire conditions. No materials should be used which act as a fuel for fires. Avoid the use of magnesium or flammable resins, sealants and coatings.

9. COMPOSITES (§§ 25.601, 25.603, 25.609, 25.613, 25.615, 25.619, 25.571, 25.581). The suitability and durability of materials used for nonmetallic auxiliary fuel tanks must be established by tests. Advisory Circular 20-107, Composite Aircraft Structure, should be reviewed for applicability when composite materials are used. The following elements should be considered in establishing material properties and substantiating the nonmetallic auxiliary fuel tank structure by tests:

a. Aging of the laminate in the operating environment, including wear, due to temperature, pressure, cavitation, moisture content changes, etc.

b. Chemical reactions with fuel vapor, cleaning liquids, solvents, salt water vapor and any other contaminates such as fungus in the tank.

c. Static electrical charge, bonding or lightning strike.

d. Any other elements characteristic of or unique to the type of nonmetallic material, method of processing and design applications.

e. A manufacturing process to ensure repeatability of material properties.

f. Inspection techniques for manufacturing and for continued airworthiness.

g. Statistically based material strength properties for critical tank structure. Strength, detail design and fabrication must minimize the probability of fatigue failure. Chapter 9 of MIL-HDBK-SD, Metallic Materials and Elements for Aerospace Vehicle Structures, and MIL-HDBK-17, Plastics for Flight Vehicles, contain procedures for establishing such properties.

h. Composite repair procedures defined by the applicant and approved by the FAA.

CHAPTER 4.

Auxiliary Fuel System Performance

10. **GENERAL.** The designer should evaluate the auxiliary fuel system performance for all normal operating conditions of the airplane. This will, as a minimum, require an FAA witnessed functional ground and flight test program. Some of the performance criteria discussed in this section can be sufficiently evaluated by analytical methods, and substantiation reports submitted to the applicable FAA aircraft certification office for approval. As noted earlier, installations that involve changes in primary structure, aerodynamics, or mass distribution may require additional extensive substantiation that is beyond the scope of this AC. The following criteria should be considered by the applicant in generating test plans and substantiation reports for certification of the system.

11. **NORMAL OPERATION EVALUATION.**

a. Refueling and Transfer Performance.

(1) *Refueling and Transfer Flow Rates and Pressures* (§§ 25.951, 25.955, 25.957, 25.961, 25.991 and 25.979).

(i) The auxiliary refueling system should be analyzed to determine that the flow rates and pressures are acceptable. Fueling flow rates should also be demonstrated and verified by ground tests. The tank vent system capacity should be verified for the required operations and to ensure that over pressurization of the tanks, including the existing airplane main tanks when applicable, does not occur. Verification is also required that the pressure fueling automatic shutoff means does not produce unacceptable surge pressures which may damage the system or fueling equipment or rupture fueling lines. This verification can be accomplished by ground or laboratory refueling tests using fast response pressure transducers and recorders or submittal of previously accepted similar tests and service history data.

(ii) Transfer rates should be determined for all flight conditions in which transfer will be permitted to ensure that the receiving tank will be neither

overfilled nor depleted before transfer is completed. It should be shown that transfer does not present any hazard, such as unwanted fuel migration, during such flight conditions. Any restrictions on transfer, such as duration or flight operating condition, must be outlined in the limitations section of the AFM. It should be assumed that the transfer system might be left on inadvertently; therefore, it should also be shown that transfer under conditions not permitted by the AFM would not present any hazard.

(iii) Compliance with the hot weather operational performance requirements of § 25.961 must be shown for auxiliary feed systems that feed directly to the engine. This is normally accomplished by conducting a hot fuel test; however, it may, in some instances, be sufficient to show that the system is similar to a previously approved system or to submit an analysis that is supplemented with component test data.

(iv) For auxiliary fuel systems that depend on bleed air for fuel transfer the airplane engine is, in effect, a transfer pump, and fail-safe requirements for pump transfer apply. This means that there must be an alternate means of providing fuel transfer in event of an engine inflight shutdown in accordance with § 25.901(c). This is usually provided by extracting bleed air for auxiliary tank transfer downstream of the pneumatic cross-over point. It is suggested that the applicant consult the airplane type certificate holder concerning the proper location of bleed air extraction points.

(2) *Fuel Tank Capacities (Usable Fuel, Sump Capacity, Undrainable Fuel, and Expansion Space)* (§§ 25.959, 25.969, and 25.971).

(i) For direct feed auxiliary fuel systems, the unusable fuel requirements of § 25.959, apply. For transfer type auxiliary fuel systems, the unusable fuel is the quantity of fuel remaining after transfer under the most critical steady state airplane flight attitude and altitude conditions permitted by the AFM.

(ii) Sump capacity is a part of the unusable fuel and as previously noted, is defined by § 25.971(a).

(iii) The undrainable fuel quantity should be measured, usually during the initial filling of the auxiliary tanks as a part of FAA witnessed ground tests. The undrainable fuel quantity is the fuel remaining in the system after all fuel possible has been sump drained from the system. It is not usually necessary to completely fill the tanks to determine the undrainable fuel, as the undrainable fuel is fuel trapped between stringers, at low points in fuel fittings, etc. Usually measuring the quantity of fuel necessary to fill all trapping cavities in the system is all that is necessary.

(iv) The maximum tank fueling capacity must take into consideration the expansion space requirements of § 25.969, Fuel Tank Expansion Space. The expansion space volume is the space available for fuel thermal expansion within the tank itself and does not include vent line volume. Basically, the expansion space is the volume from the tank full level to the level where fuel will just begin to enter the vent line.

(v) Figure 5 shows how the expansion space would be defined for three different vent configurations. The expansion space volume must be subtracted from the total volume of fuel at the level at which fuel will just begin to enter the vent line, and does not include the "compression" space above the vent opening. The expansion space should be derived for the airplane in its normal ground attitude. Expansion space capacity is verified during the airplane ground fueling tests conducted as a part of the test program.

(vi) Ground and flight tests of the installed system must be conducted in accordance with § 25.979 with the airplane in the correct ground and flight attitudes to verify that the expansion space requirements are maintained for pressure fueling to the maximum automatic fuel shutoff level, verify tank(s) pressures during failure of the auto shutoff and also provide the correct values for usable and unusable system fuel.

(3) *Pressure Relief (Water Hammer and Thermal Expansion)* [§§ 25.995 and 25.1189(h)]. The designer should evaluate the pressure fueling and transfer or direct feed system operation to ensure that no damaging fuel line pressures will occur during flow shutoff or due to thermal expansion effects. Normally, sufficient flex line length and the use of "slow" shutoff valves or valves with thermal relief features will negate this problem. In some cases relief valves or other means may need to be incorporated in the system.

(4) *Vent System Anti-Siphoning* (§ 25.975). The auxiliary tank vent system should be arranged so that no hazardous quantities of fuel can migrate from one tank to another tank or discharged overboard during any normal flight attitudes.

b. Operating Limits (§§ 25.1503 through 25.1533). Assuming that the airspeed, C.G., maximum takeoff weight and maximum landing weight limitations will not be changed as a result of the auxiliary fuel system installation, the applicant's alternatives will be tradeoffs between payload weight and auxiliary fuel system weight at maximum capacity loading. Using these criteria, the applicant should review the requirements of Part 25 Subpart G, operating Limitations and Information, to ensure that the auxiliary fuel system design does not degrade the airplane performance and other requirements stated in this subpart. If the C.G., airspeed, maximum takeoff or landing weight limits are increased, recertification efforts beyond the scope of this AC will be required.

(1) *Operating Airplane Flight Envelope*. The installation of the auxiliary fuel system should not restrict the operating flight envelope of the airplane, or a major recertification effort may be required. This does not mean that the auxiliary fuel system must function (transfer fuel) at all existing extremes of the airplane flight envelope. Envelope limitations on the transfer of auxiliary tank fuel must, however, be stated in the AFM. Using the above criteria the applicant should ensure that the auxiliary fuel system will not be adversely affected by exposure to the temperatures, pressures, altitude variation, and flight loads encountered in all regions of the airplane flight envelope. Specific examples of the above are discussed in Chapter 3 of this AC, in particular sections 8a(3) and 8a(5).

(2) *System Electrical Power Requirements* (§§ 25.1351, 25.1357).

(i) If additional equipment which consumes electrical power is installed in an airplane, the revised total electrical loads should not exceed the

generator or alternator output ratings and limits prescribed for the airplane, or the ratings of any airplane bus(es). To ensure that the design meets the criteria, the applicant should provide the following:

(A) Power requirements for each of the equipment items which will be installed.

(B) Wiring diagrams for the equipment installation.

(C) An updated, electrical load analysis for the airplane including the auxiliary fuel system.

(ii) An appropriate circuit protective device (circuit breaker or fuse) should be installed as close as possible to the electrical power-source bus. Good engineering practices for selection of circuit breakers would consider the following:

(A) The minimum rating commercially-available airplane circuit breaker size which will power the normal (i.e., intended) load without nuisance trips, thereby minimizing deliverable power to possible fault loads.

(B) Integral three-phase circuit breakers to protect three-phase loads.

(C) The selected circuit protective device must be consistent with the airplane electrical system protection and must protect the smallest wiring in the circuit.

(3) *System Pneumatic Requirements (If Applicable)* (§§ 25.981 and 25.965). If pneumatic pressure is used to transfer the fuel, it should be demonstrated that safe air supply temperatures and pressures are maintained under all normal and failure conditions of the pneumatic system. Air supply temperature, verified by test, should never exceed a safe margin below the lowest expected autoignition temperature of the fuel during fuel transfer. Safeguards should be provided, such as pressure regulators or relief valves, to ensure that over pressurization of the tanks will not occur in event of a pressure regulation failure in the pneumatic system. Cockpit pressure gauges indicating actual transfer pressure may also be required to ensure correct and adequate pressure levels.

(4) *Fuel Quantity System Calibrations and Limitations* [§ 25.1337(b)]. Part 25 requires that fuel quantity gages read zero when the fuel remaining in the tank is equal to the unusable fuel supply. In this respect fuel quantity systems are calibrated for usable fuel wet, i.e., with a specific fuel of known density to substantiate that the fuel measurement system, as installed in the airplane, indicates zero in a level flight attitude. The applicant may want to increase the unusable fuel to the zero limit of the gage in some cases where the gage can not be calibrated down to the actual unusable tank fuel level, in lieu of replacing the gage. The calibration also encompasses additional readings of the fuel quantity gage which are compared against a standard, usually the readings taken from a fueling system having a calibrated accuracy of 0.5 percent. With the exception of the zero reading, all other calibration errors should be defined so that the acceptability for the particular auxiliary fuel system under review can be determined.

12. **FAIL SAFE AND EMERGENCY OPERATION EVALUATION** [§§ 25.952 and 25.901(c)]. It is the applicant's responsibility, as a part of the certification compliance program, to analyze and submit a report(s) on the auxiliary fuel system component failure modes and consequences of these failures. It must be shown that the resulting consequence of any single detectable failure or combination of undetectable failures will not jeopardize the safety of the airplane. The fail safe criteria as defined in Appendix 1, Definitions, should be used as a guide in all design and failure mode analyses.

a. System Failure Modes.

(1) *Component Failure Modes*.

(i) The applicant will analyze the effects of malfunction or failure of each piece of equipment installed in the auxiliary fuel system and ensure that no malfunction will result in a hazard to the airplane. The analysis will include the effects of failure for all modes of component failure and all modes of auxiliary fuel system operation, such as, pressure fueling and defueling, fuel transfer or engine feed, and emergency fuel jettisoning. The effects of both detectable and undetectable failures shall be analyzed.

(ii) Wherever possible the configuration should incorporate means to detect component failures in the system. An example of such detecting means is the momentary "on" position detecting circuit incorporated in electric motor operated fuel shutoff valves. Valves with this feature are available as off-the-shelf items.

(2) *Component Failure Indication*.

(i) As discussed in the previous section, failure indication should be incorporated wherever possible to preclude situations of undetectable failure which can jeopardize airplane safety. Failure indication can be provided in a number of ways. The best from a recognition standpoint is indication which is immediate and draws attention. The momentary "on" position, or in-transit light for a motor operated shutoff valve, a low fuel state warning light, and an audible warning and light indicating fire or overheat are all examples of this type of indication. Continuous monitoring indicators such as pressure gauges, fuel quantity indicators, and temperature gauges can also provide failure indication. However, these devices are not as effective because they rely heavily on human judgment and alertness. Where crew workloads are heavy, such indications may go unnoticed for long periods or until the failure produces a critical flight incident.

(ii) Periodic inspection, such as the preflight inspection for fuel dripping from the auxiliary fuel system shroud drain (indication of fuel system leakage) is an essential function, but does not preclude the chance of failure occurring during long duration flights. Thus, assuming other means of detecting leakage are not incorporated, design precautions (for example, placing electrical wiring in conduits where it is routed through shroud spaces) may be necessary to preclude the chances that another failure will affect the safety of the airplane.

(3) *Special Considerations for Auxiliary Fuel Systems Used for C.G. Control*. On occasion, an applicant has elected to offset an airplane's C.G. shift by

retaining fuel in an auxiliary tank for use late in the flight profile. Normally, auxiliary system fuel is used after takeoff and early in flight. This allows a somewhat simpler system having reduced redundancy compared to that of the main fuel tank system for the airplane. If the auxiliary fuel system should fail to transfer, the flight can return to the point of departure. However, for an auxiliary fuel system used for C.G. control, as where fuel is consumed late in flight, it may not be possible for the airplane to return to the original point of departure in the event of a fuel transfer malfunction. For this reason the system should have fail-safe transfer capability similar, in part, to the main tank fuel system. The safety of this system must stand on its own merits, i.e., a failure or malfunction of the auxiliary system should not prevent continued safe operation of the engines nor require reliance on the basic airplane's reserve fuel to complete the planned flight. Consideration must be given to the amount of vibration, wing flexure loads transferred to connections, support brackets, locking devices, etc., and the consequences of failure on the ability to maintain critical transfer flow rate. Therefore, the configuration should provide appropriate fail-safe features to assure that auxiliary fuel is always available in the event of a malfunction. Examples of some of the fail safe features which have been incorporated in a C.G. managed system in the past are shown in Figure 6 and include:

(i) Verification that in event of a significant failure of a feed line, the shroud would act as a redundant line to transfer the required fuel.

(ii) Incorporation of dual transfer pumps, line check valves and additional line support brackets. The added brackets ensured that if the feed line couplings inside the tank failed and separated, sufficient line alignment was maintained to ensure the fuel transfer. The added braces restricted both longitudinal and lateral line movement in event of coupling separation.

(iii) A fuel transfer verification check procedure incorporated in the AFM. This check procedure required that a sufficient quantity of fuel be transferred early in flight to ensure that the system was functioning properly.

b. Operating Limits [§ 25.1351(d)].

(1) *Emergency Electric Power Requirements*. Generally there are no auxiliary fuel system electrical components which are required to be on the airplane essential bus circuits. There are however two exceptions which the designer should consider carefully:

(i) Direct engine feed auxiliary systems where the loss of pump electrical power could create an unsafe operating condition, such as an engine flame-out.

(ii) Direct engine feed or transfer auxiliary systems where fuel management is required to maintain proper airplane C.G. control (such as, fuel used late in the flight).

(iii) If, in either of these cases, fail-safe features are used which require the need for emergency electrical power, these needs should be assessed to ensure that sufficient power is available from the airplane essential power system. [See also Chapter 4, paragraph 11b(2)]

(2) *Fuel jettisoning* (§ 25.1001).

(i) If the applicant uses a trade-off between auxiliary fuel system weight at maximum fuel capacity and payload weight (and thus there is no change in the airplane maximum takeoff and landing weights) the fuel jettisoning requirements of the airplane will be the same as for the original, unmodified airplane. There will therefore be no need to jettison auxiliary tank fuel. Addition of fuel capacity which increases the maximum take-off weight of the airplane would require recertification efforts which are beyond the scope of this AC. One of these efforts would, however, be to evaluate the need of auxiliary fuel jettisoning.

(ii) Regardless of the need for auxiliary fuel jettisoning, the applicant should ensure by failure mode analysis or demonstration, that main tank fuel jettisoning can still be accomplished without hazard to the modified airplane (see also the discussion in Chapter 1, paragraph 3b)

CHAPTER 5.

Impact of System on Airplane Operation and Performance.

13. **ENGINE OIL SYSTEM CAPACITY** (§ 25.1011). The applicant should ensure that the additional fuel capacity of the auxiliary fuel system, thus the added flight duration, does not cause depletion of the engine oil supply under maximum oil consumption conditions and engine out operation. Adequacy of the engine oil capacity must be shown as a part of the compliance for certification of the auxiliary fuel system.

14. **MAIN FUEL SYSTEM CAPACITY AND FLOW REGULATION.** The applicant should show that there is no condition in which a receiving tank could be over filled from the auxiliary tank fuel. If necessary, means should be provided in tanks supplied with auxiliary fuel to regulate the fuel level in those tanks. Also, there should be no condition in which a receiving tank could be depleted during auxiliary tank transfer. In some cases, auxiliary tank fuel transfer cannot be initiated until the receiving tank fuel has been used down to a certain quantity. This limitation must be clearly stated in the AFM. The applicant must include in the AFM all limitations on the use of auxiliary tank fuel and any warnings necessary in the operation of the system. Limitations and procedures should be evaluated with regard to practicality and pilot workload.

15. **RADIO FREQUENCY INTERFERENCE.** The applicant should ensure that the system will not cause objectionable radio frequency interference and not be adversely affected by radio frequency interference from other airplane systems.

16. **AIRPLANE CENTER OF GRAVITY CONTROL.**

a. Since auxiliary fuel tanks are usually installed after initial certification of the airplane and are not part of the basic fuel system, the weight and location of the installation may introduce complex procedures in C.G. modes of auxiliary fuel transfer may be used, requiring C.G. control for each. If a failure can trap fuel in an auxiliary fuel system, there must be a means provided to feed the engines and stay within the C.G. limits for the remainder of the flight (to reach the airport of destination or an alternate airport}. Instructions necessary to maintain the airplane within the established C.G. limits are required by the operating regulations and by § 25.1583(c).

b. An auxiliary fuel system installed aft of the main gear may affect the airplane ground handling operations. Especially for airplanes that have not normally been ground handling limit critical, special cautions and placards may be required in both the cargo and refueling station areas. It may be necessary in some cases to institute refuel sequence controls to prevent tipping of the airplane. Since removal of interiors or other equipment could also aggravate ground aft C.G. problems, maintenance manual supplements should include appropriate procedures and cautions (see Chapter 6, paragraph 20, also).

c. A means of controlling the center of gravity can be attained by providing C.G. limit charts with associated limits on airplane gross weight, configuration, zero fuel weight, and fuel schedules in the limitations section of the AFM. In addition, fuel transfer procedures should be provided for all modes of transfer along with instructions for C.G. control if fuel transfer is not available. If the airplane is loaded within the zero fuel limits of the charts and fuel is used per the approved transfer schedules, the airplane should remain within the allowable center of gravity limits. See Appendix 1 for definition of zero fuel weight.

CHAPTER 6.

User Instructional Requirements.

17. AIRPLANE PLACARDS AND INSTRUMENT MARKING EVALUATION.

a. Location of Placards, Markings, Gauges, Switches, etc. [§ 25.1557(a) and (b)].

(1) Cockpit and fueling station placards, markings, annunciator lights, gauges, switches and controls for the auxiliary fuel system should be located in suitable areas with sufficient illumination to assure they are easily readable during day and night operations. The switches and controls must be easily accessible to the ground or flightcrews as required by the applicable regulations.

(2) Special placards, located in the cargo compartment, or adjacent to the auxiliary fuel tank installation may be necessary to inform or caution the ground crew about certain aspects of the installation. These placards may, for example, state certain cargo compartment loading limits or restrictions, flexible cargo barrier tensioning requirements or cautionary flammable fluid requirements as required. Also suitable markings on the airplane exterior surface are required, identifying drain access doors, masts, etc.

b. Instrument, Instrument Identification, Lighting and Calibration 25.1305, 25.1337, 25.1381, 25.1541, 25.1543, 25.1553, 25.1555 and 25.1583).

(1) A fuel quantity indicator should be installed for each independent auxiliary fuel tank which provides indication to the flightcrew of the quantity, in gallons or equivalent units, of usable fuel in each tank during flight [see also Chapter 4, paragraph 11b(4)]. Indicators should be as accurate and compatible with the existing airplane fuel quantity indicators as possible and calibrated using the same units of volume (metric or English).

(2) Instrument and switch markings should be easily readable with instrument lights.

(3) Each instrument, indicator and switch must have markings/placards which permit the crew to easily identify it. Markings and placards shall be displayed in conspicuous places and shall be such that they cannot be easily erased, disfigured or obscured.

(4) If the instrument markings are on the cover glass of the instrument, there must be means to maintain the correct alignment of the glass cover with the face of the dial.

(5) Each fuel tank selector control, if used, must be marked to indicate the position corresponding to each tank.

18. **AIRPLANE FLIGHT MANUAL (AFM)** (§§ 25.1581 through 25.1587).

a. Auxiliary fuel tanks installed after initial certification of the airplane require an FAA-approved AFM supplement or an appendix to the existing basic AFM to provide appropriate operating information, procedures and limitations. Generally, an appendix to an AFM is appropriate when written by the manufacturer of the basic airplane, and a supplement is appropriate when the applicant for an auxiliary fuel tank installation is other than the manufacturer.

b. The applicant is responsible for preparing the AFM supplement or appendix which will be incorporated into the basic AFM. The operating procedures and limitations will be evaluated by the FAA flight test crew as part of the flight test evaluations prescribed by the Type Inspection Authorization (TIA). Crew workload also will be evaluated to determine whether it is still acceptable with the addition of an auxiliary fuel system. Crew workload should be considered early in the design of the system, with FAA participation, to ensure that all considerations are properly coordinated.

c. Sufficient information and data should be provided in the AFM to assure that the flightcrew will be able to understand and operate the system during normal, abnormal, and emergency operations of the airplane.

d. Abnormal procedures are those that are not normal procedures and also are not emergency procedures. They include procedures for foreseeable failure situations in which the use of special systems, or the use of regular systems, may be expected to maintain an acceptable level of airworthiness. Immediate action is not usually required. Since most auxiliary fuel systems are add-on systems, which are not included in the flight training syllabus of the airplane, the AFM supplement or appendix must be complete in providing the required information. To assure completeness of the AFM supplement (or appendix) the following discussion and format are provided as a guide for the type of information that should be considered.

(1) *Limitations*.

(i) WEIGHT LIMITATIONS. Maximum zero fuel weight changes and weight and center of gravity limits should be specified. It should be emphasized that when fuel is loaded into fuselage auxiliary tanks, the maximum zero fuel weight must be reduced by the weight of the added fuel.

(ii) FUEL LOADING LIMITATIONS. The maximum allowable fuel in each auxiliary tank should be specified. Loading limitations may be required to maintain weight/C.G.. within limits, i.e., certain main fuel tanks may be required to be loaded before the auxiliary tanks and the auxiliary tanks

may be required to be loaded in a particular sequence depending on the design of the system.

(iii) FUEL MANAGEMENT LIMITATIONS.

(A) Specific fuel usage procedures may be required to maintain the weight and balance of the airplane within limits. Additionally, flight planning limitations may be required if a single failure can trap fuel in the auxiliary fuel system; the main fuel system must still provide sufficient fuel to the engines for the remainder of the flight, i.e., to reach the airport of destination or to an al ternate airport.

(B) A specific sequence of transferring auxiliary fuel may be required as a result of fuel flow rates.

(C) If auxiliary fuel is used for ballast, a placard indicating the amount of ballast fuel is required in the cockpit.

(iv) OPERATING LIMITATIONS.

(A) Maneuvering limitations should be specified.

(B) Tank pressurization or transfer of fuel during takeoff and landing are usually prohibited because of the crashworthiness fire hazard.

(C) Transfer of fuel during climb or descent may be prohibited because of usable fuel considerations.

(v) MISCELLANEOUS LIMITATIONS. Cargo and floor loading restrictions may be required due to the auxiliary fuel tank installation.

(2) *Emergency Procedures*.

(i) DITCHING. If applicable, procedures must be provided regarding transfer of fuel from auxiliary fuel tanks and placement of controls and switches prior to ditching.

(ii) NO FUEL TRANSFER. Should fuel not transfer and become trapped in the auxiliary tanks, procedures should be included to regain transfer capability. If transfer is still not available, management procedures should specify how to maintain weight/C.G.. within limits.

(iii) ENGINE INOPERATIVE. In the event of an engine failure, auxiliary fuel systems which use engine bleed air for fuel transfer may lose transfer capability. In order to restore transfer, procedures must be included which define the steps required for obtaining bleed air from the remaining operating engine(s). These procedures should also define engine operating restrictions, if required, which apply during transfer following engine-out conditions. Continued use of bleed air for fuel transfer may be affected by the engine-out enroute climb performance requirements of Part 25.

(3) *Normal Procedures/Abnormal Procedures.*

(i) FUEL LOADING. Instructions necessary to enable loading of the airplane within the established limits of weight and center of gravity, and to maintain the loading within these limits in flight must be provided.

(ii) EXTERNAL PREFLIGHT CHECK. Detailed procedures should be specified.

(iii) COCKPIT PREFLIGHT CHECK. Detailed procedures should be specified.

(iv) FUEL MANAGEMENT AND TRANSFER PROCEDURES.

(A) Detailed procedures should be specified for each fuel transfer schedule approved and should include normal fuel transfer rates for use.

(B) Flow Check. Procedures to determine that auxiliary fuel transfer is available should be specified, where required.

(C) Fuel Jettison. (If installed). Procedures should be established to dump fuel, if desired, listing airspeed, altitude, and configuration.

(v) USABLE FUEL. Maximum usable fuel should be specified.

(vi) UNUSABLE FUEL. The unusable fuel should be specified.

(4) *Performance*. Any change in airplane performance should be provided. For instance, if engine bleed air is used to pressurize the auxiliary fuel system, its effects should be accounted for.

(5) *Auxiliary Fuel System Description*. A detailed description and functional arrangement schematic should be provided. This information may be provided in an unapproved section of the AFM supplement (or appendix) or may be included in the approved SECTION 3, NORMAL PROCEDURES. A suggested outline includes the following:

(i) Fuel Transfer System.

(ii) Control Panel.

(iii) Refueling System.

(iv) Electrical System.

(v) Schematics.

19. **WEIGHT AND BALANCE MANUAL INFORMATION**. Weight and loading distribution information including loading instructions must be presented either in the AFM supplement or in a separate weight and balance control and loading document which will be referenced in the AFM. Reference § 25.1583(c).

20. **MAINTENANCE MANUAL** (§ 25.1529). The inspections, tests, repairs and related intervals upon which compliance with the applicable certification basis is based should be included in a maintenance manual supplement supplied by the applicant. The manual should also contain complete servicing information for the auxiliary tanks and systems. If the applicant proposes to have a system where a tank(s) may be removed or made inoperable for maintenance purposes and the remainder of the system remains airworthy (as where more than one tank configuration is an

approved configuration) or where the entire system is classified as removable, complete maintenance instructions should also be provided detailing tile methods of system modification or removal, resealing and restoring the compartments, and other considerations necessary to make the airplane airworthy. The applicant should refer to Part 25, Appendix H, Instructions for Continued Airworthiness, when providing maintenance instructions.

APPENDIX 1.

DEFINITIONS

1. **DEFINITIONS**. The following definitions are applicable as used in the text of this AC.

a. Auxiliary Fuel System. An auxiliary fuel system is a system installed within the airplane which makes additional fuel available for increasing the flight range of that airplane. The term "auxiliary" means that this system is secondary to and backed by the airplane's essential fuel system, i.e., that the functions of the essential fuel system are immediately available and operative without immediate supervision by the flightcrew in the event of failure or inadvertent depletion of fuel in the auxiliary fuel system [reference § 25.955(b)(2)]). In essence, an airplane equipped with an auxiliary fuel system is capable of safe flight even when the auxiliary fuel system is not used, i.e., where its fuel storage capacity is not required for short range flight.

b. Essential Fuel System. An essential fuel system is a system installed within an engine powered airplane which is required for safe operation of the airplane. Its primary function is to provide an independent, uninterrupted flow of fuel to each airplane engine. Essential (or main) fuel tanks are those tanks which normally supply fuel directly to the engine in at least one operating mode and are necessary to satisfy the independent feed requirements of the airplane (reference § 25.953). These tanks also contain the reserve fuel necessary for all flight diversions and other contingencies.

c. Fail-Safe.

(1) The FAA fail-safe design concept is a design methodology where the effect of failures and failure combinations must be considered in defining a safe design. The following basic rules involving failure events apply:

(i) In any system or subsystem a single failure of any element or connection during any one flight (brake release through ground deceleration to stop) must be assumed without consideration as to its probability of failing. This single failure event must not prevent the continued safe flight and landing of the airplane.

(ii) Additional independent failure events during any one flight following the first single failure must also be considered when the probability of occurrence is likely (i.e., those combinations of failures not shown to be extremely improbable). If a critical failure event cannot readily be detected, it must be counted as a latent existing failure in addition to the first failure. The probability of these combined failures includes the probability of occurrence of the first failure event.

(2) The following design principles and techniques are generally utilized to prevent single failures and likely combinations of failures from jeopardizing the continued safe flight and landing of the airplane:

(i) Redundancy or back up systems that provide system function after the first failure, i.e., two or more engines, two or more hydraulic systems, dual flight controls, etc.

(ii) Isolation of systems and components, both physically and functionally, so that failure of one element will not cause failure of the other. This is sometimes referred to as system independence.

(iii) Detection of failures or failure indication.

(iv) Functional verification, i.e., the capability for testing or checking the condition of the components.

(v) Proven reliability and integrity to assure that multiple component or system failures will not occur in the same flight.

(vi) Damage tolerance that limits the safety impact or effect of the failure.

(vii) Designed failure path that controls and directs the failure event by design to limit the safety impact.

(viii) Flightcrew procedures following the failure event designed to assure continued safe flight by specific crew actions.

(3) The FAA fail-safe design concept utilizes all of the above eight design principles in whatever combination is required to produce a fail-safe design. The employment of only one of the above principles is seldom adequate; generally two or more are used in the design to satisfy the fail-safe design concept, i.e., assure that catastrophic failures will be extremely improbable.

d. Fuselage Break Points. Fuselage break points are points along the fuselage where accident data has shown the fuselage shell structure has failed. It can be a partial failure in which the structure across the break remains attached or a complete failure resulting in two separate pieces. These are generally attributable to two types of conditions:

(1) Cutouts and stress concentrations.

(2) Points of maximum load, either point loads by the landing gear or maximum bending moments, such as, at the juncture of the wing and body.

e. Passenger/Cargo Compartments. All compartments specifically designed to provide a suitable life support environment for people and animals during all operating modes of the airplane. These areas may or may not be pressurized. These areas include, but are not limited to, the cockpit, passenger compartments, galleys, and all classes of cargo and baggage compartments.

f. Zero Fuel Weight. Typically, transport category airplanes are designed to carry the fuel supply in the wings. In addition to any other advantages, locating the fuel in the wings relieves wing bending stresses and allows a higher maximum weight than would be possible with the same quantity of fuel located within the fuselage. For such airplanes, zero fuel weight is established as a limit to ensure that maximum wing bending stresses are not exceeded by replacing fuel in the wings with an equal weight of payload carried in the fuselage. When an auxiliary fuel tank is installed within the fuselage, the existing zero fuel weight limit is no

longer directly applicable because the fuel contained in that tank does not relieve wing bending stresses. It is, therefore, necessary to reduce the zero fuel weight limit by the maximum usable fuel capacity of the auxiliary tank. Alternatively, the zero fuel weight limit may be redefined as the maximum zero wing fuel weight limit. Any fuel contained in the auxiliary tank would then be treated as payload from a weight and balance standpoint. Regardless of which procedure is used, the AFM must clearly state the limit and its meaning.

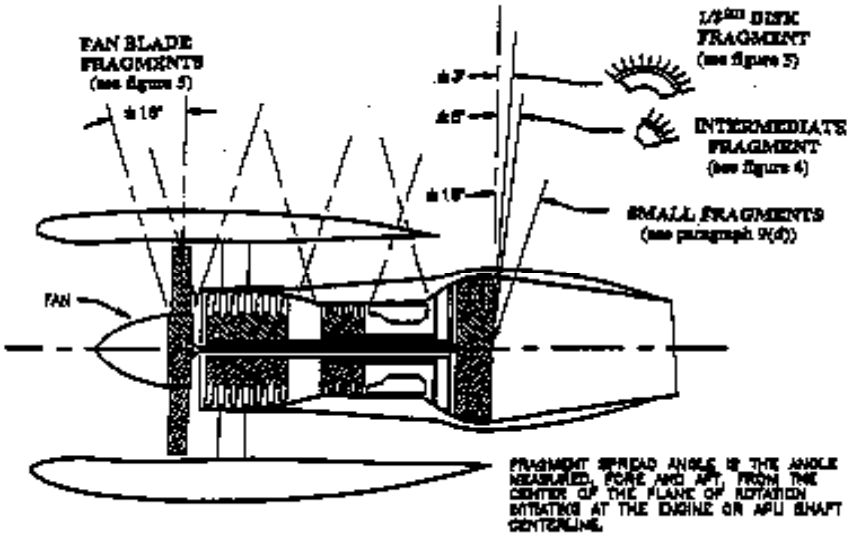

FIGURE 1 - ESTIMATED PATH OF FRAGMENTS

Figure 2

AN EXAMPLE OF SHROUDING OF EQUIPMENT ITEMS

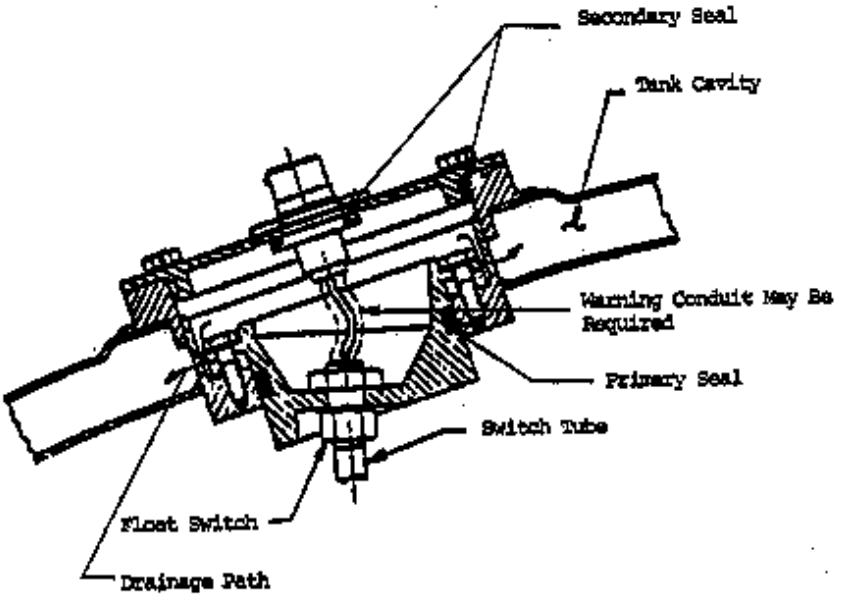

Figure 3

AN EXAMPLE OF INSTALLATION OF ITEMS ON TANK WALLS

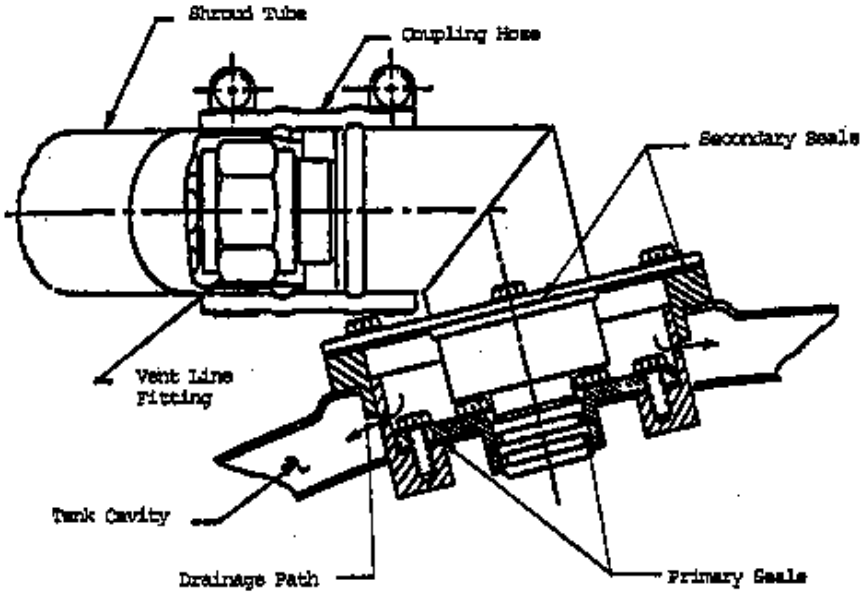

Figure 4

AN EXAMPLE OF SHROUDING OF FUEL OR VENT LINE FITTINGS IN PASSENGER OR CARGO COMPARTMENTS

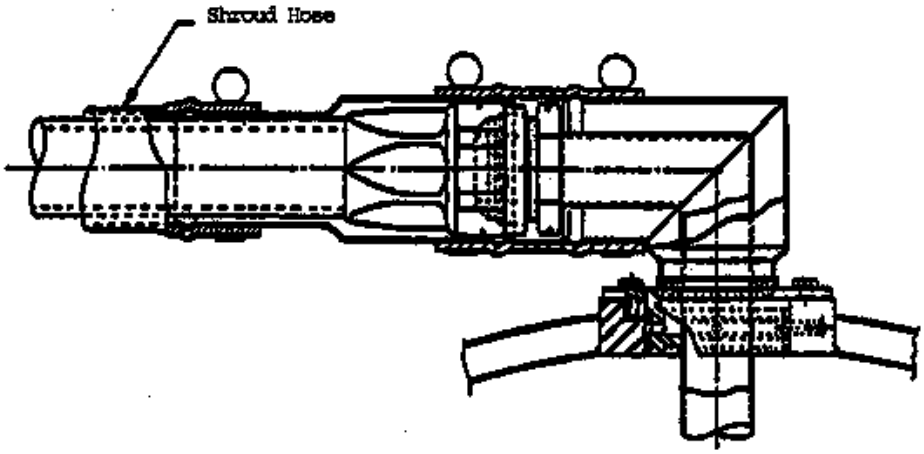

Figure 6

EXAMPLES OF EXPANSION SPACE DEFINITION

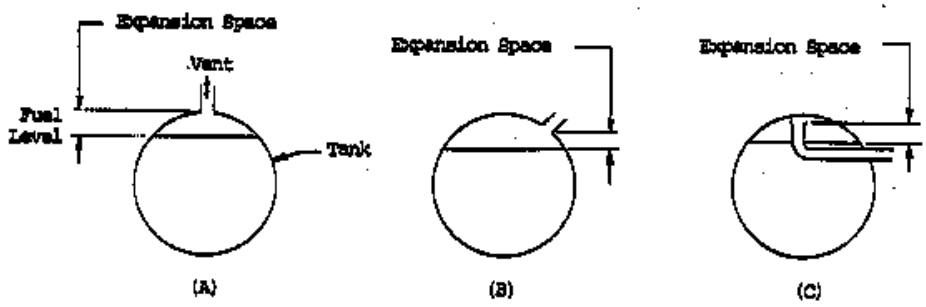

Figure 6

AN EXAMPLE OF AN AUXILIARY FUEL SYSTEM USED FOR C.B. CONTROL

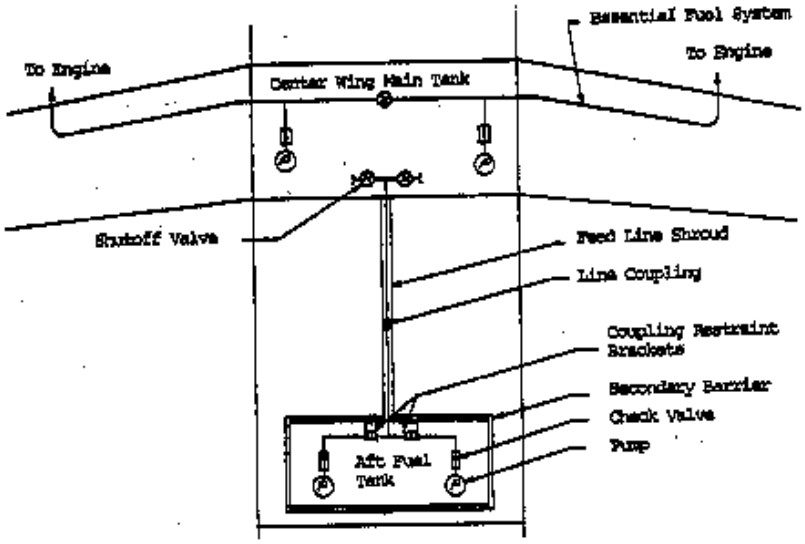

■■

END OF ADVISORY CIRCULAR 25-8

(3) ***Electrostatics.*** With the introduction of high-flow capacity pressure (under wing) fueling systems the concern over the effects of electrostatic charge build up within the fuel tanks greatly increased. In several cases fuel tank explosions were attributed to this cause. In general, an analysis of electrostatic charge that is generated during airplane refueling is required. (See previous text originally from AC 25-8 for guidance.) Testing of individual components may be required to show that proper charge dissipation is achieved (e.g., composite fuel tank access panels).

The internal tank coatings can influence the degree of fuel electrostatic charge relaxation. The use of dielectric primer, corrosion protective coatings and painting on internal tank walls should be consistent with the desired overall fuel tank wall conductivity."

The following excerpts from SAE Aerospace Information Report (AIR) 1662, October 1984, provide insight into guidance for preparation of the analysis.

> **Section 2, Physics of Electrostatic Charge Generation and Accumulation in Aircraft Fuel Systems.** When a hydrocarbon liquid such as jet fuel flows past a surface, positive and negative electrostatic charges can be separated along the surface. While the precise nature of the charging mechanism is not known, it appears to be associated with the presence of minute quantities of ionic impurities in the hydrocarbon. Ionic impurity mechanisms for charge generation on either metallic or non-metallic surfaces have been proposed by Leonard and others; whatever the actual mechanism, it is an observed fact that a hydrocarbon liquid flowing over a surface can acquire a charge, with the contact surface acquiring the opposite charge, resulting in a net positive charge in the body of the fuel. If the fuel is set into motion and charge is separated, the immediate re-association of the separated charges is hindered by the very low electrical conductivity of highly refined hydrocarbon fuels. Charge is therefore convected away by the liquid flow, in opposition to the electric field between the liquid and its surroundings, creating a potentially hazardous condition.
>
> One of the main charge generators during aircraft refueling is the ground refueling equipment dirt filter/water coalescer-separator unit which may add to the charge produced by the filter-coalescer or tend to neutralize it.
>
> As charged fuel flows through refueling hoses and pipes and enters the aircraft tanks, charges have an opportunity to be eliminated by migrating to the walls and re-associating with the opposite charge, a process described as relaxation. The process of the recombination of charges can be described as a function of time.
>
> Jet fuel electrical conductivity without antistatic additive normally ranges from 0.1 to 20 Coulombs, so that typical relaxation times range from 180 to 0.9 seconds. In actuality, the relaxation time for fuels of very low conductivity is shorter than the previous estimate, and accepted practice is that 30 seconds is sufficient to remove most of the charge from fuel after the end of a filtering operation.
>
> The residual charge which migrates toward the fuel-air interface tends to produce a charged region near the surface, causing strong electric fields which can lead to discharges to nearby grounded objects.

(4) The following excerpt from FAA Order 8118.34A, "Procedures for the Use of Alternate Fuels for Turbine-Powered Aircraft," dated March 31, 1980, provides insight into current FAA guidance concerning switch loading of fuels. It highlights factors that should be considered when reviewing fuel systems during analyses and tests criteria to be used to for showing compliance with this rule.

FAA ORDER 8118.34A **March 31, 1980**

SUBJECT: Procedures for the Use of Alternate Fuels for Turbine-Powered Aircraft

PURPOSE. To provide information on possible hazards arising from switch fueling and to emphasize need for observing limitations stated in aircraft flight manual. Switch fueling, as referred herein, denotes the practice where fuels having a flash point of less than 100°Fahrenheit (38°C) are mixed with fuels having a flash point above 100°F either by addition of the higher flash fuel to the lower flash fuel or vice versa. (For example, fueling with kerosene base fuels into an aircraft tank containing reduced flash point kerosene, or other jet fuel having a flash point of less than 100°F.)

BACKGROUND.

a. It may be necessary on occasion to use fuels which have a flash point lower than 100°F. The approved fuels are published in the limitations section of the appropriate aircraft flight manual. Switch fueling rules apply if conditions described in 5d(3) or 5d(4) prevail.

b. Switching of fuels is a common practice in loading of tank trucks but has not been widespread in fueling aircraft. Reports of tank truck explosions and fires which occurred during the loading process show that over 90 percent of the explosions occur while switch loading; however, appropriate operational procedures may not have been followed in many cases.

c. This order was previously issued as a Notice in 1973. Recent introduction of new approved fuels with reduced flash point has prompted issuance of an order to be effective until cancellation since switch fueling may become more widespread.

ACTION. All field personnel are requested to bring this information to the attention of all operators, fueling agencies, and managers of airport fueling facilities and to emphasize the following:

a. Whenever any type fuel is used in a turbine-powered aircraft, the aircraft flight manual should be consulted to determine what fuels and additives have been approved for use in the aircraft. Switch fueling would normally apply when kerosene base fuel is fueled into tanks containing reduced flash point kerosene or other jet fuel having a flash point of less than 100° F or vice versa. If aviation gasoline has been approved as an alternate fuel for emergency situations, it is advisable to check the grade of avgas that has been qualified as satisfactory.

b. Caution anyone employing switch fueling that it is mandatory to comply with all instructions, procedures, limitations, and precautions established by the aircraft manufacturer as shown in the approved flight manual. Altitude restrictions, operational time limitations with the alternate fuel, and restrictions on the use of fuels with certain additives are some of the operational considerations that may be applicable when switch fueling.

CAUTION *- Fuels not listed in the aircraft flight manual should not be used.*

c. If switch fueling is to be performed in which the fuel being added is within specified conductivity limits through the addition of an approved conductivity additive (ASA-3 is one such approved additive), the normal precautions and standard procedures are considered adequate. A check with the refueler should be made to determine that the additive is actually in the fuel being furnished to the aircraft.

d. If switch fueling is to be performed in which the fuel being added does not contain conductivity additive, SPECIAL ADDITIONAL PRECAUTIONS should be observed:

(1) *PRESSURE REFUELING SYSTEM* - While switch fueling, rate of flow should not exceed 50 percent of rated flow of the equipment being used to refuel the aircraft. On aircraft with multiple point refueling capability, this can be done by use of a single hose from a refueling vehicle designed for simultaneous fueling from two (or more) hoses. This will have two beneficial effects, to provide more time for charge dissipation and to reduce internal splashing and misting.

(2) *GRAVITY FILL SYSTEMS* - While switch fueling, splashing should be avoided by making sure the nozzle extends to the bottom of the tank or below the liquid level. Flow should be held down to about half normal rates. The fueling nozzle should be electrically bonded to the aircraft.

(3) If the tank contains wide-cut Naphtha base or avgas fuel and is to be refueled with the kerosene base fuels listed under Paragraph 6, then switch fueling guidelines shall apply: i.e., reduced fueling rate.

If the tank contains reduced flash kerosene, the indicated fuel tank temperature in the aircraft shall be below the fuels minimum specification flash point or reduced refueling rate shall be used. If the fuel temperature is not available, ambient temperature at the time of refueling shall be used.

(4) If tank contains any of the kerosene base fuels listed under Paragraph 6 and is to be refueled with wide-cut Naphtha base or avgas fuels, reduced refueling rates shall apply. If the tank contains kerosene type fuel and is to be refueled with reduced flash point kerosene, the fuel being loaded shall be below its minimum specification flash point or reduced fueling rates shall apply.

NOTE: *These switch fueling guidelines are based on the theory that an ignition hazard should not be present when fuel is handled at temperatures below its flash point and may be present when fuel is*

handled at temperatures above its flash point. Therefore.. the fuel specification minimum flash point value is used as the fuel temperature which establishes when refueling rate should be reduced if switch fueling under the conditions described above. However, it is known from laboratory tests using different flash point measurement methods that flash point variations up to about 10°F (6°C) have been obtained. other tests under fuel spray conditions have indicated that the flash point as measured by a standard laboratory method may be about 20°F (11° C) higher than the lower flammability temperature limit of the fuel. These data indicate that the fuel specification minimum flash point value may not always represent the lowest fuel temperature at which flammable fuel/air vapors can form. Full-scale refueling tests have not been conducted to investigate any effects of the laboratory test results, but it is suggested in view of the laboratory results that consideration be given to employing the switch fueling guidelines at fuel temperatures 10-20° F below the flash point value if operational conditions permit.

TERMINOLOGY. Fuels available for use in turbine-powered aircraft are of four types having minimum specification flash points as listed below:

a. Kerosene - Jet A (100° F, 38° C), A-1 (100° F), JP-5 (140°F, 60° C), JP-8 (100° F), AVTUR (100°*F).*

b. Reduced Flash Point Kerosene (below 100° F flash point) - CAN2-3.23-77 (92° F, 33° C), USSR T-1 (86°F, 30° C), and TS-1 (83°F, 28°C).

c. Wide Cut - Jet B, JP-4, AVTAG, USSR T-2 (avg. -20° F, -29°C)

d. Aviation Gasoline - for emergency operations subject to specific limitations of the aircraft flight manual.

POSSIBLE HAZARDS OF SWITCH FUELING.

a. Switch fueling can increase risks of fire and explosion unless adequate precautions are taken to prevent electrostatic spark ignition of flammable fuel/air vapors in the fuel tank. When fuels are mixed in this manner, the resulting fuel/air vapors have new and usually broader flammability characteristics, thus increasing chances of an ignitable mixture.

b. Electrostatic charges are generated as the fuel passes through the servicing equipment and by agitation and splashing in the tank. The level of charging depends upon the design of the equipment and the conductivity of the fuel. The filter/separator on the refueling unit is normally the primary source of electrostatic charge on fuel passing into the aircraft.

c. Electrostatic spark ignition of fuel vapors can be minimized by using fuel within specified conductivity limits through the addition of an approved conductivity additive. The addition point of the additive will depend on the particular fuel distribution system involved. Many fuel suppliers, however, are not equipped for injecting the additive (the injection must be done in the servicing set-up, not at the filling nozzle).

d. Electrostatic charges dissipate with time; therefore, a decrease in fueling rate will: (1) reduce the level of the charge generation and, (2) provide

more time for charges to dissipate and lessen chances of a spark inside the tank.

***CAUTION* - TRASH IN FUEL**. *It is important that tanks be maintained in a completely clean condition. Foreign particles left in the tank by servicing or maintenance personnel can serve as 'charge collectors" which greatly increase the chances of electrostatic sparks occurring in the fuel tank.*

(5) ***Lower Flash Point Fuels.*** The following extract is from an FAA memorandum dated October 19, 1983, which includes a discussion of the effects of lower flash point fuels on airplane fuel system performance:

INFORMATION: Estimated Impact on Operational Safety for Current and Future Airplanes Using Lower Flash Point Aviation Jet Fuels

This memorandum is in response to the above references which pose the question of the impact on current and future aircraft in the event that a situation forces the use of fuels with lower flash points. The following paragraphs describe the change in airplane safety by way of a number of parameters which may be influenced by lowering the flash point of Jet A fuel by 10°F to 30°F.

Statistical studies of airplane accidents have shown that for aircraft which used high vapor pressure fuels (lower flash point fuels), the crash survivability is approximately 3 to 4 percentage points less than that for aircraft which used low vapor pressure fuels (higher flash point fuels). This small difference in survivability numbers for the change in vapor pressure may be accountable to an actual flammability range which is wider than that defined in Advisory Circular 20-20. This advisory circular presents flammability limits which we believe are somewhat theoretical in that they are based on equilibrium conditions and minimum ignition energy, whereas in the actual accident situation fuel sloshing is likely present and can disperse liquid fuel droplets in the ullage space causing the mixture to be flammable at ambient temperatures. In addition, the likelihood of higher available energy levels during an accident would tend to widen the theoretical flammability limits. Accordingly, lowering the flash point of Jet A fuel is not expected to reduce survivability data to any significant degree. The assumption in this case is that survivability data may be linearly interpolated between those fuels having low vapor pressure and those having high vapor pressure.

The Reid vapor pressure would be expected to increase slightly when the flash point is reduced. Engine manufacturers typically limit Reid vapor pressure to 3 psi maximum for present and projected aircraft. A Reid vapor pressure in excess of this limit may allow fuel system cavitation to occur. With a lowering of the flash point by 30°F for Jet A fuel, the Reid vapor pressure which is presently very small (.01 psi) could increase slightly but would not be expected to approach the 3 psi limit. Therefore airplane fuel system performance for a hot day (§ 25.961) would not be significantly reduced by the lower flash point characteristic.

The aircraft designer employs a maximum design hot surface temperature of approximately 390°F to 400°F in zones having fuel to prevent ignition in the event of a fuel leak. For low vapor pressure fuels such as JP-5, Kerosene Fuel, the accepted hot surface ignition temperature (auto-ignition) is approximately 450°F. A 30°F decrease in flash point with the resultant increase in volatility

raises the hot surface ignition temperature yielding a somewhat more conservative operational situation with this new fuel characteristic.

The estimated safety impact on aircraft fuel system parameters for a 30°F decrease in flash point for Jet A fuel is summarized in Table I. Although no significant impact in aircraft safety is expected for this change in fuel properties, the following recommendations are offered:

(a) Aircraft ground handling personnel are presently accustomed to handling Jet A fuel having a flash point of 100°F to 125°F. If the flash point is lowered toward the high ambient temperature range, consideration should be given toward training these personnel for the increased ground fuel handling hazard.

(b) A question remains as to whether crash survivability data can reliably be interpolated linearly between high vapor pressure fuels and low vapor pressure fuels. Therefore consideration should be given to implementing the "Reduced Flashpoint Study" by Om Southwest Research organization.

TABLE I

Estimated Impact on Operational Safety for Current and Future Airplanes Using Lower Flash Point Aviation Jet A Fuels

Parameter/System	Safety Impact
Lightning	No Significant Effect
Crashworthiness	No Significant Effect
Hot Day Climb Performance	No Significant Effect
Hot Surface Ignition	Margin Slight Improvement
Static Charge Build-Up	No Significant Effect
Fueling Rate	No Significant Effect
Starting	Slight Improvement
Fuel Control	No Adjustments Anticipated
Affinity for Water	Slightly Reduced Absorption

(6) ***Approval of Fuel Dye for Leak Detection***. Due to adverse effects of fuel leakage from ground refueling hydrant systems on the environment, several requests for approval of additives to the fuel to enhance leak detection have been received.

The following excerpt is from an internal FAA memorandum, dated 1993. This memorandum is intended to define the process by which fuel additives may be approved for use. It is not intended to be used as an approval for use in other applications.

The letter from an airplane operator indicated that they intend to conduct leak detection testing at the Seattle-Tacoma (SeaTac) International Airport to meet newly enacted local, state and federal EPA regulations. They plan to require that passenger aircraft continue to be refueled from the hydrant doped with sulfur hexafluoride, SF_6. In conducting the hydrant leak test the concentration of SF_6 will be maintained at or below one part per million (1 PPM) by weight. This level of concentration is considered acceptable by certain aircraft and engine manufactures who have indicated their "No Technical Objection" to the proposed one time only leak detection test. The airline operator's letter is in fact a request for the FAA to allow the use of SF_6 as a jet fuel additive for the affected airplanes.

The Technical Protocol Report by [*Research*] Corporation, dated May 26, 1993, was included with [*the airline operator's*] letter. This report identifies the [*Research*] Corporation's method for leak detection testing using SF_6 as a tracer. The report provides details of the planned testing at SeaTac to be accomplished by the [*R*esearch] Corporation. The [*R*esearch] Corporation has experience in conducting such tests for the United States Air Force. This experience and laboratory reports on the compatibility of SF_6 with jet fuel specification ASTM D 1655 including other fuel additives, hydrant filter coalescing, compatibility with typical aircraft materials and aircraft fuel tank sealants is referenced in the [*R*esearch] Corporation's letter to the airline operator, dated July 29, 1993. These referenced reports have been reviewed and are considered an acceptable basis along with the respective engine and aircraft manufactures statements for allowing the planned testing at SeaTac Airport. The airline operator and the [*R*esearch] Corporation's letters and the referenced reports and engine and aircraft manufacturers letters are listed on the attachment.

The subject leak detection test using SF_6 in concentrations of 1 PPM can be allowed as a one time only event and the airline operator's jet fuel hydrant must be limited to certain engine and aircraft models.

d. **<u>References.</u>**

(1) Notice of Proposed Rulemaking 75-19 (40 FR 21866, May 19, 1975).

(2) Amendment 25-40 (42 FR 15034, March 17, 1977).

(3) Advisory Circular 25-8, "Auxiliary Fuel System Installations," May 2, 1986 [Incorporated in total in this Propulsion Mega AC at Section 25.952].

(4) Advisory Circular 25.981-1A, "Guidelines for Substantiating Compliance with the Fuel Tank Temperature Requirements," January 20, 1971.

(5) FAA Order 8118.34A, "Procedures for the Use of Alternate Fuels for Turbine-Powered Aircraft," March 31, 1980.

(6) Society of Aeronautical Engineers (SAE) Aerospace Information Report (AIR) 1662, October 1984.

(7) Naval Research Laboratory Final Report 8484, by J.T. Leonard, September 24, 1981.

Section 25.953 Fuel system independence.

a. **Rule Text.**

Each fuel system must meet the requirements of 25.903(b) by --

(a) Allowing the supply of fuel to each engine through a system independent of each part of the system supplying fuel to any other engine; or

(b) Any other acceptable method.

b. **Intent of Rule.** The purpose of this rule is to provide an independent and isolated tank-to-engine fuel system design. Additionally, its intent is to provide a means to isolate the hazard introduced by the § 25.903 (b) failure or malfunction without immediate crew action; that section reads as follows:

> *(b) Engine isolation. The powerplants must be arranged and isolated from each other to allow operation, in at least one configuration, so that the failure or malfunction of any engine, or of any system that can affect the engine, will not --*
>
> *(1) Prevent the continued safe operation of the remaining engines; or*
>
> *(2) Require immediate action by any crewmember for continued safe operation.*

Restoring a tank-to-engine configuration is also implied, particularly for designs that are considered acceptable under § 25.953 (b) involving fuel system crossfeed arrangement. This regulation provides additional emphasis and detail to the general requirements of § 25.951, § 25.952, and the other specific fuel system design and powerplant installation requirements in Subparts E, F, and G of Part 25.

c. **Background.**

(1) Transport category airplanes have experienced multi-engine malfunction or failure due to loss of adequate tank-to-engine fuel system performance during all phases of flight. The engine malfunctions or failures have occurred, or were the result of, improper design, single failures affecting more than one engine and fuel system mismanagement. Examples include:

- use of override boost pump pressure rather than strategically placed check valves,
- failure of vent pressure regulating relief valve in pressurized fuel systems, and
- initiating gravity flow operation above gravity flow limiting altitude.

(2) The regulatory history shows that this requirement originated from Section 411 of the Civil Air Regulations (CAR) 4b, December 31, 1953. Amendment 25-AD (29 FR 18289, December 24, 1964) added Part 25 [New] to the Federal Aviation Regulations and replaced Part 4b of the Civil Air Regulations. It was part of the Agency recodification program announced in Draft Release 61-25, published in the Federal Register on November 15, 1961 (26 FR 10698). Part 25 [New] was published as a notice of proposed rulemaking in the Federal Register on June 2, 1964 (29 FR 7169), and given further distribution as Notice No. 64-28. This rule was recodified from CAR 4b.411 without any substantive changes.

d. **Policy/Compliance Methods:** FAA policy on this topic has been formulated and appears in numerous sources. Compliance has been demonstrated through proper design with adherence to FAA guidelines. In general, these guidelines are reflected in the following:

(1) The following excerpt from Advisory Circular 29-2B, "Certification of Transport Category Rotorcraft, provides insight into current FAA guidance for transport category rotorcraft and may provide insight into compliance guidance for transport category airplanes.

(a) The purpose of § 25.953 is to ensure an independent fuel supply system for each engine.

(b) The assessment to ensure compliance with § 25.903(b), engine isolation, should include consideration of component failure (including fuel leakage), malfunction, and damage.

(c) Consideration of fuel tank leakage under § 25.903(b) has dictated separate fuel tanks for transport category airplanes.

(d) A common supply tank, with individual "collector" tanks has been allowed for four engine airplanes, provided the considerations noted in the examples below have been addressed, i.e., the capacity of the collector tanks will allow 20 minutes of operation at takeoff power, airplane range can be shown for completing a safe diversion, fuel contamination has been evaluated, etc.

(e) The fuel system independence regulations are not intended to preclude single-point fueling designs. Fuel contamination considerations should be addressed by fuel management evaluations, such that if contamination (water or particulate) were introduced into the airplane system it would be detected. In the case of water contamination, the fuel management and fuel tank pump inlets should be located such that any water would be fed to the engines during engine start-up an taxi. In the case of particulate contamination, the engine fuel filter capacity and associated indication system should be shown to allow continued safe flight and landing (see § 25.997 and § 25.1305).

(f) The assessment of an independent fuel supply system for each engine should begin at the fuel supply pickup point within the tank and continue to the engine fuel inlet at the engine.

(g) If supply line crossfeed capability is included as a feature, care must be exercised to ensure that the opening of the crossfeed does not jeopardize the continued safe operation of more than one engine. For example, if the crossfeed valve is operated to provide fuel, the possibility that fuel line leakage could cause opening the crossfeed and jeopardize the continued safe operation of both engines should be considered. Procedures and/or systems to isolate fuel leaks may be required. Similarly, opening the crossfeed valve with a suction lift system following engine or system malfunction should not allow air into the fuel supply line of the remaining engine.

(h) The independent fuel supply system requirement for each engine is for normal fuel system operations. Care should be exercised to ensure that Airplane Flight Manual procedures do not authorize normal usage of fuel system configurations which may violate the engine isolation principle. For example, routine fuel balance procedures should not allow usage of a common supply line if a failure can jeopardize the continued safe operation of more than one engine.

(i) **Note**: Fuel systems have been approved where fuel from a single tank supplied multiple engines. These systems were shown to meet the independence requirements by demonstrating that:

1) The system was designed to allow tank to engine fuel,

2) Failure of the feed fuel line would not cause the loss of more than one engine,

3) Fuel contamination would be detected during engine start up and taxi (in one case specific fuel sampling limitations were placed in the AFM); and

4) Fuel supply from the main fuel tanks was automatically fed to the engines if the auxiliary tank supply system failed.

(j) Fuel system designs which allow the continued safe operation of all engines under expected fuel system component failure conditions (for example, a failed boost pump) by using common fuel flow paths under failure conditions are acceptable.

(k) For APU's which perform a required in-flight function, a separate, independent fuel system complying with the corresponding engine fuel system rules should be provided. Other APU's (which do not perform a required in-flight function) may be supplied with fuel from a tee connection to a main engine fuel supply. The fuel shutoff valve for the APU should be located as close as possible to the APU system's connection to the main engine fuel system and a check valve should be included in the APU fuel system to prevent reverse-flow if negative pressure exists momentarily in the main engine fuel system. Maximum fuel demand of the APU will not jeopardize compliance with § 25.955.

(2) ***Crossfeed Systems.*** The following guidance was provided in an FAA memorandum, dated May 18, 1981, for certification of a 4-engine airplane with the following fuel system arrangement:

- Cross-feed can be accomplished between engines 1 and 2, 2 and 3, and 3 and 4;

- However, cross-feed between engines 1 and 3, 2 and 4, and 1 and 4 cannot be accomplished without also feeding another engine.

Sections 25.903(b) and 25.953 only require an independent fuel system configuration which will not affect the safe operation of the remaining engines if failure of an engine occurs. There is, therefore, no regulatory requirement, per se, to be able to transfer fuel to any specific engine. However, Section 25.1189 (b) prohibits isolation of fuel in a tank that can be made available to "the remaining engines" following closing of the tank-to-engine valve for the engine involved in the fire. From a cursory review of the fuel system schematic drawing, it appears that with proper procedures, all fuel can be utilized equally in the event of an engine failure even though the options for transfer are somewhat limited. The actual fuel system and proposed procedures must be carefully reviewed in this regard. The effects of fuel distribution on structural and flight characteristics must also be considered.

(3) ***Fuel System Independence.*** In several cases, applicants have proposed using a single-wing fuel tank for feeding two engines on a four-engine airplane. This configuration does not meet the fuel tank independence requirements for the reasons stated in the following discussions.

(a) Fuel System Arrangement - Four Engine Airplanes: The following excerpt from an FAA Issue Paper on *Fuel System Fault Tolerance* provides guidance on fuel system independence.

Statement of Issue. The general arrangement of the proposed fuel system and the reliance on automatic processor controlled fuel transfer through complex non-redundant flow paths appear to leave the aircraft unusually vulnerable to malfunctions which would jeopardize continued safe operation due to loss of engine fuel supply, loss of fuel tank structural integrity, and/or aircraft weight imbalance.

Discussion. Initial reviews of the proposed fuel system raised concerns within the FAA which included,

(1) The use of only two tanks to feed four engines results in a lack of engine to engine isolation. Only the two "inner tanks" are capable of feeding an engine directly. Therefore, there are no configurations in which damage or contamination of either "inner tank" will affect only one engine. [Refer to § 25.903(b) and § 25.953]

(2) - The reliance on automatic fuel transfer through complex non-redundant flow paths could unacceptably expose the aircraft to loss of engine fuel feed capability or aircraft weight imbalance conditions due to system malfunctions. System malfunctions which result in trapping fuel in the tanks, creating mismatches between required feed and available transfer rates, producing fuel flow routing errors, propagating contamination within the system, reducing fuel feed supply pressures, and inadvertently jettisoning fuel are all of concern. During the FAA initial reviews, some specific features and malfunctions of concern were noted. These included:

- Contamination of one tank could be spread by transfer to other tanks.

- Contamination of the center tank is of particular concern because it could spread the contamination to all other tanks.

[Refer to § 25.903(b) and § 25.953]

FAA Position. The fuel system does not appear to provide the level of fault tolerance necessary to meet the objectives of the referenced regulations. The applicant needs to provide additional data and fuel system modifications to address these issues.

Foreign Authority Position. The following positions were presented in response to the FAA concerns noted above:

(1) *ENGINE TO ENGINE ISOLATION*. The tank arrangement as described in the reference letter is such that the inlets of the jet pumps are now physically separated by the sealed center spar. Although the two parts of the wing inner tank are communicant, the possible contamination of both parts by a single source (fungus, debris, etc.) is considered unlikely.

(2) *UNCONTAINED ENGINE ROTOR OR FAN BLADE FAILURE.*- The inner tank division in two separate cells which can be isolated by an isolation valve is considered to address the concern for high energy rotors, since an uncontained high energy rotor or fan blade failure will not cause the loss of both cells simultaneously, thus leaving a significant amount of fuel on board. The inner engine low energy LPT disk failure, which trajectory is still intercepting all tanks, will be justified on the basis of energy absorption considerations. The controllability of the aircraft in the resulting fuel imbalance situation will have to be assessed. The exact procedure for shutting the new isolation valve in case of engine rotor burst will have to be detailed and reviewed by the applicant. The applicant proposes that the isolation valve position not be indicated and that the inner tank be considered as a single tank during normal operations and for the gauging system. It is accepted that the wing tank be considered as a single tank for gauging system and normal operations.

(3) *FUEL SYSTEM SAFETY ASSESSMENT*.

(aa) - the nose up attitudes which could result in fuel trapped in tail tank will be assessed in detail. It should be shown that fuel cannot be trapped in cruise where fuel transfer is normally performed.

(bb) - the cases quoted will be assessed in the fuel system safety assessment (SSA).

(cc) - see item 1).

(dd) - the switching between primary boost pump and standby boost pump will be flight tested at high altitudes.

(ee) - the fuel jettison system is now controlled by two guarded pushbuttons, so that a failure or inadvertent activation of any one pushbutton will not cause inadvertent fuel jettison.

Applicant Position. The applicant's position on each item of the discussion section of this Issue Paper are as follows:

(1) *ENGINE TO ENGINE ISOLATION*. (damage or contamination of either inner tank not to affect more than one engine) The tank arrangement as is such that the inlets of the jet pumps which are feeding the collector cells are physically separated by the sealed center spar. The applicant considers that this design complies with § 25.903(b) and § 25.953.

. . .

(3) - *CONTAMINATION.* See item 1).

Conclusion: This Issue Paper is closed based on positions presented above plus satisfactory resolution of all concerns highlighted in the "FAA Response" to those positions in Stage 2. For the record, the following delineates the resolution of the Stage 2 "FAA RESPONSE" items of concern:

(1) *ENGINE TO ENGINE ISOLATION*. The concern about the cues and procedures available in the cockpit under the failure conditions being adequate to assure appropriate and effective crew actions was addressed by FAA flight test personnel review and approval of the procedures during flight testing.

(3) and (4) *FUEL SYSTEM SAFETY ASSESSMENT/CENTER TANK VENT*. The general and specific failure effects and reliability concerns delineated in this Issue Paper item will be addressed by the Safety Assessment Process. Furthermore, the FAA will be provided a copy of the fuel system safety assessment (SSA) for review.

(b) Fuel System Arrangement - Four Engine Airplanes: The following excerpt is from an FAA Issue Paper and provides guidance on fuel system independence.

In a recent discussion between a Foreign Aviation Authority and FAA, it was learned that there may still be some misunderstanding relative to the acceptability by the FAA of the two fuel tank system proposed for the subject airplane.

By our letter, we intended to indicate our approval of a fuel system composed of two large fuel tanks in the airplane each tank having a separate collector tank for each engine. The capacity of each collector tank was required to be at least 20 minutes of fuel at sea level takeoff thrust.

We are enclosing copies of our letter of November 11, 1976, and the fuel system analysis document which was referenced via this letter for your further information relative to the configuration of the fuel system which we believed would meet the requirements of §§ 25.903(b) and 25.953.

Background. The applicant proposes that a single tank in each wing be the source of fuel for the two engines on that wing. The objective of this analysis is to attempt to determine whether this configuration is certifiable in accordance with § 25.903(b) and § 25.953 or § 21.21(b) equivalent airworthiness provisions.

The main point of the applicant position is that through independent plumbing to each engine, the common collector tank, advantages of simplicity and back-up provision, this design meets the provisions of § 25.953(b) ("any other acceptable method"). The FAA position is that we believe the intent behind this rule was to have individual tanks for each engine for normal operation.

Description of System. As proposed, the current design concept has independent feed systems from the tank to each of the engines supplied from that tank (Engines #1 and 2 - left wing tank, Engines 3 and 4 right wing tank). Each tank has an internal collector tank into which all fuel from the basic tank is directed for transmission to the individual engines. The collector tank is divided by a coarse screen so that the two boost pumps (one for each engine) are separated by this means. This screen serves to prevent simultaneous blockage of both pumps should foreign matter be present. Fuel is maintained in the collector by means of bleed flow from the boost pumps used to aspirate fuel from the tank. A hydraulically driven pump is provided as automatic backup, in case of electrical power failure, to provide continued flow to aspirate tank fuel into the collector. It is contended that in case of a boost pump failure, a single boost pump can adequately supply all 4 engines. Cross feed valves are provided so that this flexibility is possible. It is also contended that sufficient gravity head is available to permit normal operation of engine-driven fuel pumps in the extreme case that all boost pumps become inoperative.

Pros and Cons: On the face of the current wording of § 25.953, the applicant is justified in its view that the current fuel systems concept could fulfill “b.” However, we have been unable to determine the basis for the wording of § 25.953 which occurred during the recodfication of CAR 4b (Docket 5066, Amend 1-6, 91-10, issued November 3, 1964, and published in the Federal Register December 24, 1964). Specifically, CAR 4b.411 was the earlier requirement and its wording unmistakably conveys the intent to require separate fuel tanks available to each engine. Review of the docket failed to disclose any comment or discussion that promoted a change of the wording. We are therefore of the opinion that it was intended for the original regulation (4b 411) and that the recording was inadvertent and most probably prompted by a semantic exercise. Thus, we maintain our belief that complete and separate fuel delivery provisions to each engine are required for Part 25 certification.

We are generally in sympathy with the applicant rationale advanced for justifying the proposed configuration but we do have one major disagreement which we believe weakens their position. This is the philosophy regarding fuel tank leakage. We do not accept the position that fuel tank leaks of significance will not occur in a single flight, but will be evolutionary and therefore detectable before becoming potentially hazardous. We do believe that postulation of the possible occurrence of such a hazardous leak is paramount to adequate safety engineering design.

We concur that the proposed concept would be certifiable on a Part 23 airplane. While this on the surface may seem to be an inconsistency, we do not consider it such. The FAA Act of 1958 specifically differentiates between safety levels for general aviation and air carrier aircraft. The emphasis is placed on the latter carrying scheduled paying passengers, as warranting a more stringent level of safety. Thus, the differences in § 25.953 over § 23.953 are intentional and the rationalization for accepting the lesser requirement universally is invalid.

Recommendations and Conclusion. Based on the foregoing, we recommend that the applicant reconsider the earlier airplane model fuel system concept which provided separate and individual internal fuel collector tanks for each engine. Furthermore, we conclude that the single collector tank concept now being promoted cannot be accepted as meeting the requirement or as providing equivalent safety.

d. **References.**

(1) Civil Air Regulations 4b, December 31, 1953.

(2) Amendment 25-AD (29 FR 18289, December 24, 1964).

(3) Advisory Circular 29-2B, "Certification of Transport Category Rotorcraft," July 30, 1997.

(4) FAA Memorandum, "Policy for Fuel Cross-Feed Multiengine Fuel System Configuration," dated May 18, 1981.

(5) FAA Memorandum: "Request for Guidance and Policy on Acceptable Means of Compliance with Fuel System Independence Requirements, FAR 25.903(b) and 25.953," dated May 4,1976.

(6) FAA Issue Paper, "Subject: Fuel System Fault Tolerance," March 12, 1993.

Section 25.954 Fuel system lightning protection.

a. **Rule Text.**

The fuel system must be designed and arranged to prevent the ignition of fuel vapor within the system by --

(a) Direct lightning strikes to areas having a high probability of stroke attachment;

(b) Swept lightning strokes to areas where swept strokes are highly probable; and

(c) Corona and streamering at fuel vent outlets.

(Amdt. 25-14, 32 FR. 11629, Aug. 11, 1967)

b. **Intent of Rule.** The intent of this rule is self-evident. However, note that this rule only protects the aircraft from lightning strikes that are "highly probable" rather than "not extremely improbable," as would be consistent with other safeguards.

c. **Background.**

(1) Airplanes flying in and around thunderstorms are often subject to direct lightning strikes as well as to nearby lightning strikes which may produce corona and streamer formation on the aircraft. During the mid 1960's several instances and at least one accident was the results of lightning strike on fuel system components. Since elements of the fuel system are typically spread throughout much of an aircraft and occupy much of its volume, which include the fuel tanks themselves, as well as associated vent and transfer plumbing, and electronic controls and instrumentation, the direct result of being struck by lightning or the indirect result of the lightning strike, could be catastrophic to the airplane.

(2) Following issuance of several Special Conditions on this subject, this rule was proposed in Notice of Proposed Rulemaking 65-43 (31 FR 93, January 5, 1966). The following excerpt from the preamble to the Notice proposed a new § 25.981 Fuel System Lightning Protection which would read:

The design of each fuel system must be approved with respect to protection against fuel vapor ignition by lightning including, as applicable, approval with respect to the following:

(a) Protection against the ignition, by corona or streamering, of fuel vapor in and emanating from vent outlets.

(b) For each area of the airplane in which there may be swept strokes, the protection prescribed in paragraph (a) and --

(1) Protection of each vent outlet against fuel vapor ignition caused by direct strokes; and

(2) Protection of each fuel system component against fuel vapor ignition caused by arcing associated with strokes on insulated and semi-insulated parts of the airplane such as access doors and filler caps.

(c) For each area of the airplane having a high probability of stroke attachment, the protection prescribed in paragraph (b) and protection against --

(1) Direct Strokes;

(2) Attendant blast effects; and

(3) Penetration of any part of the fuel system.

Amendment 25-14 (32 FR 11629, August 11, 1967) followed Notice 65-43 and adopted the proposal in part. .In response to comments received in response to the Notice, and since the proposed requirements were general in nature, the FAA determined that it would be more appropriate to add a new § 25.954 as it currently reads.

The following excerpt from the preamble to the Amendment provides additional insight as to the intent of the rule:

> "With respect to swept strokes, the notice covered each area of the airplane in which they "may occur." However, with respect to direct strikes, the notice covered only areas where there is a "high probability" of stroke attachment. A swept stroke is in fact a series of successive direct strikes swept across the surface of the airplane by the motion of the airplane. The probabilities of these two kinds of events are thus closely related. It was not the intent of the Notice to require investigation of swept strokes other than those associated with the direct strokes that are covered, namely those in the area of <u>high probability</u> stroke attachment. For this reason, this amendment refers only to swept strokes in areas where they are "highly probable."

d. **<u>Policy/Compliance Methods</u>.**

(1) Acceptable methods of compliance, and in certain cases "required compliance methods,'' include drawing and schematic review together with a compliance (mock-up) inspection, system description, ground tests and analysis.

(2) The following excerpt from Advisory Circular 20-53A, "Protection of Aircraft Fuel Systems Against Fuel Vapor Ignition Due to Lightning," provides FAA compliance policies and guidance:

> In general, the steps below outline an effective method to show compliance:
>
> a. **Determine the Lightning Strike Zones.** Determine the airplane surfaces, or zones, where lightning strike attachment is likely to occur, and the portions of the airframe through which currents may flow between these attachment points. The lightning strike zone locations are defined in paragraph 10b, and guidelines for locating them on particular airplanes are given in paragraph 10c.

b. **Establish the Lightning Environment.** Establish the component(s) of the total lightning event to be expected in each lightning strike zone. They are the currents and voltages that should be considered and are described in paragraph 11.

c. **Identify Possible Ignition Sources.** Identify systems and/or components that might be ignition sources to fuel vapor. Ignition hazards may include structures as well as fuel system mechanical and electrical/electronic components associated with the fuel tanks.

NOTE: In order to provide concurrence on the certification compliance, the above three sequential steps should be accomplished, reviewed with the appropriate FAA personnel, and an agreement reached prior to test initiation to prevent certification delays.

d. **Establish Protection Criteria.** Establish lightning protection pass/fail criteria for those items to be evaluated.

e. **Verify Protection Adequacy.** Verify the adequacy of the protection designs by similarity with previously proven installation designs, simulated lightning tests, or acceptable analysis. When analysis is utilized, appropriate margins to account for uncertainties in the analytical techniques say be required. Developmental test data may be used for certification when properly documented and coordinated with the certification agency. See section titled "Comparison with Development Tests" of the Users Manual.

NOTE: Except for standard design/installation items which have a history of acceptability, any new material, design, or unique installation should follow the additional guidelines provided herein to ensure certification compliance can be accomplished.

Reference, FAA Advisory Circular 20-53A, "Protection of Aircraft Fuel Systems Against Fuel Vapor Ignition Due to Lightning," and the associated Users Manual Report Number DOT/FAA/CT-83/3, both of which provide the official FAA compliance policies and guidance for this regulation.

(3) Additional guidance and compliance methods can be found in Advisory Circular (AC) 25-8, "Auxiliary Fuel System Installation," which has been incorporated in total into this Propulsion Mega AC [see § 25.952, above]. That AC provides information that is germane to the application of this rule to fuel system installation.

(4) ***Special Issues***:

(a) Indirect Effects on Fuel System Electrical and Electronic Components. Advisory Circular 20-136, "Protection of Aircraft Electrical/Electronic Systems Against the Indirect Effects of Lightning," is primarily associated with § 25.1316 compliance. However, the guidance that it contains can also be used to assess compliance with § 25.954 for the indirect effects of lightning on fuel system electrical systems such as gauging, fuel transfer controls, etc.

(b) First Return Stroke Location, Extension in the Direction of Flight Due to Swept Leader. The leader channel will tend to attach initially to regions of the aircraft where high electrical stress has caused streamers to form; the regions are determined by methods described in AC 20-53A, "Protection of Aircraft Fuel Systems Against Fuel Vapor Ignition Due to Lightning." For a cloud to ground strike, during the time the leader has traveled to ground and the return stroke has traveled back to the aircraft, the leader channel may have been swept back along the aircraft. Consequently, the initial high current return stroke attachment could be aft of the initial leader attachment. The extent of the swept distance will depend of the aircraft height above the ground and airspeed, as well as the leader and return speeds.

One method for taking account of this leader sweeping distance is known as the "d-method." The formulae used are:

$d = V_{ac} \times t \qquad t = h/V_1 \qquad d = V_{ac} \times h/V_1$

where:

V_{ac} = aircraft speed (m/s) h= aircraft altitude (m)

V_1 = leader speed (m/s) d= distance of swept leader extension (m)

t = time of leader propagation from aircraft to ground (s)

The above formulae assume that the leader speed (~10^5 m/s) is much slower than the return stroke speed (~10^8 m/s).

In response to this concern, an FAA Policy memorandum was distributed on July 29, 1990. An excerpt of this policy memorandum is included within the compliance section of § 25.1316. Since that time, a draft AC on "Zoning" has been in work within the Society of Aeronautical Engineers (SAE) AE4L and EUROCAE WG31 Committees. This general issue is specifically addressed in the draft AC by creating a new "Transition Zone" (Zone 1C) between the traditional Zones 1A and 2A. The "d" extension is due to the sweeping of the leader, which is a function of both the aircraft altitude and speed. The distinction between Zone 1A and Zone 1C is based on the fact that the peak current amplitude of waveform A decreases with altitude.

The step by step procedure is described below :

In the first step, a model $I = I_o \times e^{-h}$ has to be selected.

This will allow one to determine two values h_1 and h_2 of the aircraft altitude above ground:

for $h < h_1$ the peak current value of Waveform A is 200 KA> I >150 KA

for $h_1 < h < h_2$ the peak current value of Waveform A is 150 KA> I >100 KA

for $h_2 < h$ the peak current value of Waveform A is 100 KA> I

Altitude h_1 and h_2 can then either be calculated with the formulae or be extrapolated directly from the curves provided in the draft AC.

In the 2nd step, the zones 1A and 1C extensions d_1 and d_2 are calculated by using h_1 and h_2 in the formula $d = V_{ac} \times h/V_1$

The zones on the aircraft are then determined through:

Zone 1A for $d<d_1$

Zone 1C for $d_1<d<d_2$

Zone 2A for $d_2<d$

d. **References.**

(1) Notice of Proposed Rulemaking 65-43 (31 FR 93, January 5, 1966).

(2) Amendment 25-14 (32 FR 11629, August 11, 1967)

(3) Advisory Circular 20-53A, "Protection of Aircraft Fuel Systems Against Fuel Vapor Ignition Due to Lightning," April 12, 1985.

(4) Advisory Circular 25-8, "Auxiliary Fuel System Installation," May 2, 1986 [Incorporated in total in this Propulsion Mega AC at Section 25.952].

(5) Report DOT/FAA/CT-83/3, "User's Manual for AC-20-53A, Protection of Airplane Fuel Systems Against Fuel Vapor Ignition Due to Lightning," October 1984.

Section 25.955 Fuel flow.

a. **Rule Text.**

(a) Each fuel system must provide at least 100 percent of the fuel flow required under each intended operating condition and maneuver. Compliance must be shown as follows:

(1) Fuel must be delivered to each engine at a pressure within the limits specified in the engine type certificate.

(2) The quantity of fuel in the tank may not exceed the amount established as the unusable fuel supply for that tank under the requirements of 25.959 plus that necessary to show compliance with this section.

(3) Each main pump must be used that is necessary for each operating condition and attitude for which compliance with this section is shown, and the appropriate emergency pump must be substituted for each main pump so used.

(4) If there is a fuel flowmeter, it must be blocked and the fuel must flow through the meter or its bypass.

(b) If an engine can be supplied with fuel from more than one tank, the fuel system must --

(1) For each reciprocating engine, supply the full fuel pressure to that engine in not more than 20 seconds after switching to any other fuel tank containing usable fuel when engine malfunctioning becomes apparent due to the depletion of the fuel supply in any tank from which the engine can be fed; and

(2) For each turbine engine, in addition to having appropriate manual switching capability, be designed to prevent interruption of fuel flow to that engine, without attention by the flight crew, when any tank supplying fuel to that engine is depleted of usable fuel during normal operation, and any other tank, that normally supplies fuel to that engine alone, contains usable fuel.

(Doc. No. 5066, 29 FR 18291, Dec. 24, 1964, as amended by Amdt. 25-11, 32 FR 6912, May 5, 1967)

b. **Intent of Rule.**

(1) Compliance with subparagraphs (a) and (b) require full-scale fuel system tests to demonstrate compliance with the engine manufacturers type of fuel, fuel flow and fuel pressure limitations throughout the airplane operating envelope (altitude, airspeed, cold day-hot day temperatures) and for each fuel system configuration (crossfeed, transfer, empty to full tank manual switching/boost pump-fuel flow reprime).

The type of fuel and fuel pressure are recorded in the engine Type Certificate Data Sheet and the fuel flow requirements are recorded in the engine model Installation Manual.

(2) The intent of paragraph 25.955 (b) (2) is to require:

(a) manual tank switching capability, and

(b) that it be designed to provide continuous fuel flow to an engine without attention by the flightcrew when any tank supplying fuel to that engine is depleted of fuel and another tank which normally supplies fuel to that engine contains usable fuel.

c. **Background.**

(1) Section 25.955(b) requires that, if an engine can feed from more than one tank, the fuel system must supply full fuel pressure to that engine in not more than 20 seconds upon switching to any other tank after depletion of the fuel supply in any tank from which that engine can be fed. For reciprocating engines, interrupted fuel flow can be secured simply by switching tanks, because reciprocating engines have continuous ignition sources.

For turbine engines, however, the "apparent malfunction" caused interrupted fuel flow would probably be a flameout. Interrupted fuel flow may occur on airplane fuel system designs incorporating one tank per engine, which is the normal fuel feed configuration. This type of fuel system can result in interrupted fuel flow and must have appropriate manual switching, crossfeed, capability. The number or extent of the crossfeed arrangements that can be allowed, and that are required for compliance with §§ 25.903(b), 25.951, 25.952, 25.953 and 25.1189(b), must be established. The "design" requirements for manual switching and uninterrupted fuel flow are separate and distinct. The preamble to amendment 25-11 clearly states the applicability of these two design requirements. Manual switching requires fuel monitoring by the flight crew. Fuel monitoring is not precise enough, at the lower limits of usable fuel flow under all conditions. Section 25.955(b) was added to require design features for ensuring uninterrupted fuel flow without attention by the flight crew where a fuel system design incorporates another (more than one) tank that normally supplies the engine containing usable fuel.

(2) The original requirements for fuel feed and fuel transfer systems were provided in Civil Air Regulations (CAR) 4b.414 ("Pump Systems") and 4b-415 ("Transfer Systems"). CAR 4b.414 required that the fuel flow rate for pump systems (Primary and emergency) shall be 125 percent of the fuel flow required to develop takeoff power. CAR 4b.415 required transfer systems to meet this same flowrate requirement at maximum continuous power instead of takeoff power. Amendment 4b-12 (27 FR 2986, March 30, 1962) to the CAR reduced the requirement to 100 percent of the flow required by the engines under all intended operating conditions and maneuvers. Justification for this change was as follows:

> Section 4b.413 currently requires that the available fuel flow shall not be less than 125 percent of that needed to develop maximum engine horsepower or thrust. The 25 percent margin is not required to ensure adequate fuel flow. Furthermore, a margin is unnecessary to offset system deterioration because such deterioration is precluded by proper maintenance, inspection and overhaul.

Amendment 25-AD was published in the Federal Register (29 FR 18289) on December 24, 1964, which added Part 25 [New] to the Federal Aviation Regulations and replaced Part 4b of the Civil Air Regulations. It was part of the Agency recodification program announced in Draft Release 61-25, published in the Federal Register on November 15, 1961 (26 FR 10698). Part 25 [New] was published as a notice of proposed rulemaking in the Federal Register on June 2, 1964 (29 FR 7169), and given further distribution as Notice No. 64-28. This rule was recodified from CAR 4b.414 without any substantive changes.

(3) Notice of Proposed Rulemaking 65-43 (31 FR 93, January 5, 1966) proposed a revision to this section, as discussed in the following extract from the preamble to the Notice:

> Section 25.955(b) would be amended to require, in certain cases, uninterrupted fuel flow to turbine engines if the tanks supplying those engines are depleted of fuel. Section 25.955(b) requires that, if an engine can feed from more than one tank, the fuel system must supply full fuel pressure to that engine in not more than 20 seconds upon switching to any other fuel tank after depletion of the fuel supply in any tank from which that engine can be fed. For reciprocating engines, interrupted fuel flow can be secured simply by switching tanks, because reciprocating engines have continuous ignition sources. For turbine engines, however, the "apparent malfunction" caused by interrupted fuel flow should therefore not be permitted for turbine engine fuel systems.
>
> The potential hazards associated with flameout's also require that manual fuel tank switching be precluded for turbine engine fuel systems. Manual switching requires fuel monitoring by the flight crew. Fuel monitoring is not precise enough at the lower limits of usable tank capacity to ensure uninterrupted fuel flow under all conditions It is therefore proposed to amend § 25.955(b) to require that the means for ensuring uninterrupted fuel flow be automatic.

Amendment 25-11 (32 FR 6906, May 5, 1967) followed Notice 65-43 and adopted the proposal in part. The following excerpts from the preamble to the Amendment provide further insight into this regulation:

> The notice proposed to amend § 25.955 to require that turbine engine fuel systems "have means to automatically" ensure the uninterrupted flow of fuel to each turbine engine when the tank supplying that engine is depleted of fuel.
>
> One comment states that the proposal should be limited to tanks which supply the engine in normal operation, and should not be applied to tanks that can supply the engine by cross feed. The Administrator agrees. This amendment thus uses the words "any other tank, that normally supplies fuel to that engine alone, * * *."

One commenter recommends that this amendment make it clear that manual switching capability is required. This comment is accepted. The proposal did not intend to eliminate present practice with respect to appropriate manual switching capability.

Another commenter objects to the proposal for the following reasons:

(1) The commenter states that, to require a “means” that is “automatic,” strongly implies a sophisticated device that would introduce unnecessary hazards of its own.

[FAA response:] In order to prevent such an implication, this amendment more generally requires the fuel system design to “prevent interruption without attention by the flight crew.” No dictation of specific design or specific degree of complexity or sophistication is intended.

(2) The commenter states that adequate fuel Interruption warning is provided before flameout by fuel flow and pressure fluctuations, fuel pump low pressure warning lights, loss of rotor speed, reduction in EPR, and by fuel pressure and quantity instruments required by § 25.1305 (f) and (i).

[FAA response:] The Administrator disagrees. Considering the hazards of flameout outlined in the notice, experience has not shown that the monitoring of powerplant Instruments provides a safe alternative to ensuring uninterrupted fuel flow without attention by the flight crew.

One commenter objects to the proposal for the following reasons:

(1) The commenter states that, to his/her knowledge, there has not been a problem with flameout caused by fuel interruption that indicates a need for automatic tank switching.

[FAA response:] Experience indicates that the hazard of flameout in a turbine fuel system is severe enough to warrant requiring, as a minimum standard, that some design feature (not necessarily “switching” that is “automatic”) be incorporated to ensure uninterrupted fuel flow without attention by the flight crew;

(2) The commenter states that an automatic switching device would result in a relaxation of fuel monitoring, due to reliance on the device. It is likely that overall fuel management would suffer.

[FAA response:] . . . monitoring of the fuel in the nearly depleted condition is not adequate, even if present. It is for this reason that this amendment is made. Finally, necessary monitoring of possible failures of the means for ensuring uninterrupted flow can be safely provided by proper procedures.

(3) The commenter cites the hazards of malfunction of the automatic, device and the impracticability of a sophisticated device.

[FAA response:] Existing manual switching, plus any necessary procedures for monitoring the device, will minimize any malfunction hazard when compared with the hazard of unexpected flameout. As mentioned above,

this amendment does not specify any degree of complexity but only requires that appropriate "design features" be incorporated.

An editorial change is made to §§ 25.955 (b), 27.955(b) and 29.955(b) to correct an apparent departure from former §§ 4b.413(c), 6.420(c), and 7.413(c) of the Civil Air Regulations. These former sections contained the words "*if an engine can be supplied with fuel from more than one tank*." Sections 25.955(b), 27.955(b), and 29.955(b) shortened this language, without intentional change, to "*if an engine can feed from more than one fuel tank*." To preclude any questions concerning the applicability of the affected regulations, the language of the former sections is adopted without substantive change. There is no comparable problem in Part 23.

d. **Policy/Compliance Methods.**

(1) Acceptable methods of compliance, and in certain cases "required compliance methods," include drawing and schematic review together with a compliance (mock-up) inspection, system description ground and flight toot functional (fuel management/crew workload) demonstrations, ground and flight performance tents and analysis. The applicant must provide system functioning and test proposals which address each system and condition cited in §§ 25.951(a), (b),and (c); 25.952; 25.955; and 25.961.

(2) In addition, the following issues should be addressed when evaluating compliance with this regulation:

Considering the constraints of flight crew workload per § 25.1523, the fuel management procedures and fuel system design must be shown to comply with the referenced regulations [§§ 25.901(c), 25.903(b), and 25.955(c)]. Compliance must account for the following:

- All on board systems and equipment used to load and manage fuel must be free of the potential for hazardous system failures and design implementation errors which are not clearly annunciated.

- All fuel related systems and equipment, operating in their integrated environment, must not provide misleading information or instructions that could lead to an unsafe condition.

To show compliance with the above referenced regulations, a safety analysis is required. The analysis should address both fuel loading and fuel management. This analysis should:

- Identify failures and operational errors which may contribute to a situation where the aircraft has insufficient usable fuel to reach a suitable airport (e.g., fuel leak isolation) or would result in aircraft operation outside the aerodynamic control or structural limits. All phases of fuel system operation need to be considered (refueling, dispatch, flight, etc.).

- Identify procedures for dealing with these errors and failures, including how promptly annunciation and crew response is required.

- Provide justification of the level of validation/verification required for the embedded software.

(3) Guidance from Advisory Circular 25-8, "Auxiliary Fuel System Installation," Chapter 1, Paragraph 3.a.(2), should be consulted for showing compliance to this regulation. (That AC has been incorporated in total into § 25.952 of this Propulsion Mega AC.)

d. **References.**

(1) Civil Air Regulations 4b (CAR 4b.430), December 31, 1953.

(2) Amendment 25-AD (29 FR 18289, December 24, 1964).

(3) Notice 65-43 (31 FR 93, January 5, 1966).

(4) Amendment 25-11 (32 FR 6906, May 5, 1967).

(5) Advisory Circular 25-8, "Auxiliary Fuel System Installation," May 2, 1986 [Incorporated in total in this Propulsion Mega AC at Section 25.952].

Section 25.957 Flow between interconnected tanks.

a. **Rule Text.**

If fuel can be pumped from one tank to another in flight, the fuel tank vents and the fuel transfer system must be designed so that no structural damage to the tanks can occur because of overfilling.

b. **Intent of Rule.** The intent of this rule is self-evident.

c. **Background**.

(1) The regulatory history shows that this requirement originated from Section 418 of the Civil Air Regulations (CAR), per Amendment 4b-12 (27 FR 2986, March 30, 1962). Amendment 25-AD (29 FR 18289, December 24, 1964) added Part 25 [New] to the Federal Aviation Regulations and replaced Part 4b of the CAR. It was part of the Agency recodification program announced in Draft Release 61-25, published in the Federal Register on November 15, 1961 (26 FR 10698). Part 25 [New] was published as a notice of proposed rulemaking in the Federal Register on June 2, 1964 (29 FR 7169), and given further distribution as Notice No. 64-28. This rule was recodified from CAR 4b.418 without any substantive changes.

(2) The original requirements for fuel feed and fuel transfer systems were provided in CAR 4b.414 ("Pump Systems") and 4b-415 ("Transfer Systems"). CAR 4b.414 required that the fuel flow rate for pump systems (Primary and emergency) shall be 125 percent of the fuel flow required to develop takeoff power. Car 4b.415 required transfer systems to meet this same flowrate requirement at maximum continuous power instead of takeoff power. Amendment 4b-12 reduced the requirement to 100 percent of the flow required by the engines under all intended operating conditions and maneuvers. Justification for this change was as follows:

> Section 4b.413 currently requires that the available fuel flow shall not be less than 125 percent of that needed to develop maximum engine horsepower or thrust. The 25 percent margin is not required to ensure adequate fuel flow. Furthermore, a margin is unnecessary to offset system deterioration because such deterioration is precluded by proper maintenance, inspection and overhaul.

The intent of § 25.957 to prohibit fuel vent system overflow during fuel transfer operation was provided in CAR 4b.418 ("Flow between interconnected tanks"). An excerpt from that rule follows:

> *Where tank outlets are interconnected and permit flow through the interconnection due to gravity or flight acceleration, it shall not be possible for fuel to flow between tanks in quantities sufficient to cause an overflow of fuel from the tank vent with the tanks full when the airplane is operated as prescribed in section 4b.416 (b) except that weights greater than the landing weight shall be acceptable if necessary because of the fuel loading.*

If it is possible to pump fuel from one tank to another in flight, the design of the fuel tank vents and the fuel transfer system shall be such that structural damage to tanks will not occur in the event of overfilling.

Historically, FAA policy included the following:

Determination of fuel flow between interconnected tanks: If there is a possibility of flow between interconnected tanks, it should be demonstrated that this flow is not sufficient to cause fuel to overflow from the tank vents during the conditions specified in [*CAR*] section 4b.416 (b) for determination of unusable fuel. These maneuvers should be accompanied by side slips, skids and other uncoordinated maneuvers that might occur in normal service. The tests should be conducted with full tanks.

d. **Policy/Compliance Methods.**

(1) Acceptable methods of compliance, and in certain cases "required compliance method," include drawing and schematic review together with a compliance (mock-up) inspection ground and flight test functional (fuel management/crew workload) demonstrations ground and flight performance tests and analysis. Consideration can be given to compliance by design similarity and service experience an applicants approved existing design on other model aircraft. The applicant must supply system functioning and test proposals which address the transfer system and applicable conditions cited in § 25.955.

(2) No dedicated policy material on transport category airplanes is currently available. However, the following excerpt from Advisory Circular 29-2B, "Certification of Transport Category Rotorcraft," provides current guidance policy for transport category rotorcraft and may also provide insight into compliance approaches that may be used on transport category airplanes.

ADVISORY CIRCULAR 29-2B, PARAGRAPH 451.

Flow Between Interconnected Tanks.

(1) Explanation. For fuel system arrangements which permit fuel to be pumped from one tank to another, design precautions to prevent structural damage to the receiving tank in the event of overfilling are required as well as a design means to warn the crew before overflow through the vents occurs.

(2) Procedure. The design of the receiving tank should have large vent lines or a recirculation line back to the original tank to prevent overfilling of the receiving tank. Alternatively, a float switch may be used to deenergize the transfer pump, providing that faults in the system do not adversely affect safety. A float switch may be used to warn the crew that overfilling of the receiving tank is impending. If a float switch is used, review the system reliability requirements of § 25.901(c).

(3) Where transfer of fuel from a tank is required to provide for continued safe flight and landing (e.g., maintain center of gravity or provide needed fuel reserves), the transfer system must be designed such that no single failure

will result in a hazard to the airplane as defined in § 25.901. Applicants have proposed fuel transfer systems from tail tanks with a single transfer line; however, fuel management required that the fuel was transferred early in the flight such that failure to transfer would not be hazardous.

d. **References.**

(1) Civil Air Regulations 4b (CAR 4b.418), per Amendment 4b-12 (27 FR 2986, March 30, 1962).

(2) Amendment 25-AD (29 FR 18289, December 24, 1964).

(3) Advisory Circular 29-2B, "Certification of Transport Category Rotorcraft," July 30, 1997.

Section 25.959 Unusable fuel supply.

a. **Rule Text.**

The unusable fuel quantity for each fuel tank and its fuel system components must be established at not less than the quantity at which the first evidence of engine malfunction occurs under the most adverse fuel feed condition for all intended operations and flight maneuvers involving fuel feeding from that tank. Fuel system component failures need not be considered.

(Amdt. 25-23, 35 FR 5677, April 8, 1970, as amended by Amdt. 25-40, 42 FR 15043, March 17, 1977)

b. **Intent of Rule.** The intent of this rule is self-evident.

c. **Background.**

(1) The requirements for establishing the unusable fuel quantity were contained in Amendment 4b-12 (27 FR 2986, March 30, 1962) to the Civil Air Regulations (CAR). Amendment 25-AD (29 FR 18289, December 24, 1964) added Part 25 [New] to the Federal Aviation Regulations and replaced Part 4b of the CR. It was part of the Agency recodification program announced in Draft Release 61-25, published in the Federal Register on November 15, 1961 (26 FR 10698). Part 25 [New] was published as a notice of proposed rulemaking in the Federal Register on June 2, 1964 (29 FR 7169), and given further distribution as Notice No. 64-28. This rule was recodified from CAR 4b without any substantive changes.

(2) Notice of Proposed Rulemaking 75-19 (40 FR 21866, May 19, 1975) proposed revising this requirement. The explanation for the proposed revision was provided as follows.

> The proposal would clarify the current rule in which the most adverse fuel feed condition is intended to include only normal operation.

Amendment 25-40 (42 FR 15034, March 17, 1977) followed Notice 75-19 and adopted the proposal. The following excerpt is from the preamble to the Amendment and provides further guidance.

> One commenter questions the proposed clarification of § 25.959. While the commenter agrees that unusable fuel supply should be determined under § 25.959 without considering fuel system component failures, the commenter believes that, if a failure of a fuel system component would produce a greater amount of unusable fuel, that fact must be determined in certification and made known to the operator. Fuel system component failures are not a required consideration under § 25.959. However, if the FAA determines that additional information is necessary for safe operation, this information must be furnished to

> the operator under the requirements of subpart G or Part 25. Accordingly, the proposal is adopted without substantive change.

(3) In 1977 the FAA's Standardization Staff became aware of inconsistent methods of compliance with the requirements of this regulation and requested comments from FAA Regional Offices concerning unusable fuel flight tests. These concerns were addressed by revision to FAA Orders 8110.7 (§ 23.959) and 8110.8 (§ 25.959), and later in the FAA's Flight Test Guide. In 1982 and 1984 further clarification was provided within memorandums concerning the use of simulations and analytical techniques in relation to flight testing.

d. **Policy/Compliance Methods**. FAA policy and acceptable demonstrated compliance methods are located in several references. Excerpts from several are presented below to serve as guidance for analytical, simulation and flight test data, flight manual and gage accuracy considerations, and flight test requirements.

(1) ***Analytical Considerations*.**

(a) The following excerpt is from an FAA memorandum, dated August 1, 1994, and provides guidance on unusable fuel requirements and fuel quantity indicator.

> As stated in § 25.959, the unusable fuel must be established under the most adverse fuel feed configuration for all intended operations and flight maneuvers involving fuel feed from that tank. The intended usage range should be established by the applicant based on flight characteristics of the particular airplane type. For example, an auxiliary tank that is normally depleted during cruise may use the normal cruise attitudes based on analysis of allowable airplane center of gravity configurations to establish the unusable fuel for the tank. For a main fuel tank that may be used during takeoff, climb, approach, and landing, the worst attitude within these flight regimes must be used. The applicant may choose to limit the allowable airplane nose up/down and roll attitudes, by providing an Airplane Flight Manual (AFM) limitation for low fuel operations, to reduce the unusable fuel quantities. However, these limitations must be found to be operationally acceptable for the flight conditions that are likely to exist during a low fuel state.
>
> Once the intended usage range has been established, the applicant must define attitude versus unusable fuel quantity relationships for each tank. These analytically determined relationships must be validated during flight and or ground test. The § 25.959 unusable fuel should be determined by flight testing at the point where the maximum unusable fuel would exist within the intended usage range of the tank.

(b) The following excerpt is from an FAA memorandum, dated August 1997, which provides further clarification of how the unusable fuel should be established:

> The methods and criteria presented below represent standard practice as applied to recently certificated transport category airplanes and is the basis for determining the unusable fuel quantity for the generic airplane:

a. The unusable fuel supply determination required by § 25.959 is the basis for setting the zero point for the fuel gauges. The rule requires the unusable fuel quantity for each tank to ." . .be established at not less than the quantity at which the first evidence of engine malfunction occurs under the most adverse fuel feed condition for all intended operations and flight maneuvers involving fuel feed from that tank." The airplane does not have to be capable of completing any flight maneuvers (e.g., go-around) with only the unusable fuel quantity remaining.

b. The unusable fuel supply analysis should determine the amount of unusable fuel as a function of airplane attitude (i.e., pitch and roll). The unusable fuel analysis should also consider sideslips and dynamic maneuvers such as go-around pitch-up and acceleration as prescribed by paragraph 112 of Order 8110.8, "Engineering Flight Test Guide for Transport Category Airplanes," and paragraph 109 of draft Advisory Circular (AC) 25-7-X, "Flight Test Guide for Certification of Transport Category Airplanes."

c. Airplane attitude limitations may be used as a means of reducing the unusable fuel quantity provided it is demonstrated that likely operational flight maneuvers can be accomplished with those attitude limits. Nose down pitch attitude should not be less than that for normal descent, approach, and landing maneuvers. Nose up pitch attitude consistent with a normal go-around condition, or a minimum of 10° nose up, whichever is less, must be considered. Roll attitude limitations should not be less than that required to enter a normal traffic pattern, intercept the final approach course, and land. The effect on unusable fuel quantity of steady state sideslips, anticipated during operation with the airplane in both the approach and landing configurations, should be investigated in accordance with the FAA Handling Qualities Rating Method (see Appendix 7 of Draft AC 25-7-X); normal atmospheric disturbance levels of 10 knot crosswinds with light turbulence should be included in these investigations..

d. If a fuel system component failure would result in a significant reduction in usable fuel, the unusable fuel supply test should include a determination of this quantity. The effects of the failure on the unusable fuel quantity should be presented in the Airplane Flight Manual (AFM). (Note: Failure case unusable fuel is considered information only and is not related to determining the zero reading of the fuel quantity gauges.)

e. The results of the unusable fuel quantity analysis addressed by Items b through d, above, must be validated by flight tests. Fuel flow to the engines must not be interrupted when the critical flight maneuver(s) are flown with the fuel quantity predicted by analysis in the test tank. Additionally, flight tests must be conducted to confirm that at the fuel quantity at which the low fuel warning light/message illuminates, it is possible to complete a go-around, approach, and return to landing, without fuel feed interruption, using the <u>normal go-around pitch attitude</u>; this should include go-arounds accomplished with the aid of automated flight guidance systems.

f. If airplane attitude limitations are employed to reduce the unusable fuel quantity, as described in "c." above, those attitude limitations must be published in AFM as limits for flight maneuvers after the low fuel warning light/message illuminates. This will provide insurance that the fuel remaining that is above the unusable quantity can be used without risk of fuel feed

interruption to the engines. Flight tests must be conducted to confirm that the proposed pitch attitude limit:

(1) is practical in terms of airplane flight characteristics for accomplishing a go-around, and

(2) will not result in lift and drag characteristics that will increase the time and/or fuel quantity necessary to complete the go-around to a point where the fuel remaining is less than the unusable fuel quantity.

g. Assurance of flight crew awareness of any airplane attitude limitations and their resulting effect on flight maneuvers should be demonstrated. Consideration should be given to integrating any airplane attitude limits associated with unusable fuel quantity determination into automated flight guidance systems (e.g., flight director command bars). The low fuel warning light/message trigger point should be used to limit the automatic flight guidance systems.

(2) ***Use of Simulation and Flight Test***. The FAA has historically required flight testing of all new models to validate the analytical models used to establish the unusable fuel level. In a response to the United Kingdom Civil Aviation Authority, dated August 20, 1981, the FAA stated that

> Flight test are considered necessary to establish unusable fuel quantity for new airplane designs during initial type certification. Previous flight test data and ground tests to establish changes to the original unusable fuel quantity have been accepted for derivative airplane designs.

(a) The following excerpt is from an FAA memorandum, dated February 23, 1982, which provides guidance on the determination of unusable fuel quantity. Whether actual flight testing would be required and, if so, the extent of testing required, has been determined on a case-by-case basis. Past examples range from complete determination of unusable fuel quantity with a ground simulator to complete inflight testing. Generally, simulators have been utilized at least to some extent for transport aircraft.

> The first consideration is the degree to which the simulator can duplicate actual inflight fuel system operation. It is possible for the manufacturer to build an elaborate simulator that can duplicate actual fuel system operation in flight in every respect except for inertial effects. While the effects of inertia are very significant for smaller aircraft, they have virtually no significance insofar as the unusable fuel quantities of large transport aircraft are concerned. This is particularly true for a large transport airplane with collector boxes and ejector transfer pumps. It has been found preferable to utilize a suitable ground simulator under these circumstances because it offers precision that can be achieved only under carefully controlled laboratory conditions.
>
> For some large transport airplanes, the manufacturer has elected to build a less sophisticated simulator and verify the accuracy of the results with spot checks in flight.
>
> It should be noted that the current large transport aircraft incorporate elaborate transfer and collector systems to virtually eliminate any unusable fuel quantity.

Frequently, the published unusable fuel quantity is determined by the point at which the fuel quantity gages bottom out rather than the quantity measured in compliance with § 25.959.

When a manufacturer proposes to utilize a simulator to determine the unusable fuel quantity, the need for any supplemental flight testing must be determined by considering the following:

a. The complexity of the actual fuel systems and the degree to which it is represented by the simulator.

b. The size and maneuverability of the airplane and, in turn, the likely significant or inertial effects.

c. The criteria selected to represent the first evidence of engine malfunction. , . " inasmuch as the simulator would not incorporate an actual engine.

It must be noted that other Part 25 requirements, such as fuel flow [§ 25.955(a)(2)] and fuel quantity gage calibration (§ 25.1553) are also related to the unusable fuel quantity. These other requirements must also be considered when the need for any supplemental flight testing is being determined.

(3) ***Flight Manual and Gage Accuracy Considerations.*** The following excerpt is from an FAA memorandum, dated June 19, 1981, which provides guidance on the application of § 25.959 and § 25.1337(b)(1) for unusable fuel.

Section 25.1337(b) requires means to indicate the quantity of unusable fuel. Subparagraph (1) further specifies that the fuel quantity indicator must be calibrated to read "zero" at the unusable fuel quantity. A fuel quantity indicator that bottoms out and fails to read down to the unusable fuel quantity is, therefore, not in compliance with § 25.1337(b) and § 25.959 defines the unusable fuel quantity as <u>not less than</u> the quantity of which the first evidence of engine malfunction occurs . . . Section 25.29, in turn, requires the empty weight to include the unusable fuel established under § 25.959.

While previous applicants have not been required to include ungageable fuel in the unusable fuel quantity per se, they have been permitted to do so in lieu of replacing an otherwise unacceptable fuel quantity indication system.

If the Applicant insists that their 98 lbs. of ungageable fuel is usable fuel, their fuel quantity indication system is obviously not in compliance with § 25.1337(b) and (b)(1). On the other hand, they may voluntarily choose to define the 98 lbs. as unusable fuel and include it in the empty weight of the airplane, accordingly. The fuel quantity indication system would then be satisfactory in that regard.

(4) ***Test Requirements - Flight Test Guide.*** The following excerpt is from FAA Order 8110.8, "Engineering Flight Test Guide for Transport Category Airplanes," September 26, 1974, and provides guidance on flight test requirements to demonstrate compliance with § 25.939.

a. **Explanation**.

(1) The purpose of this test is to determine, for each fuel tank, the quantity of fuel that is not available to the engines as specified in § 25.959. The unusable fuel quantity is considered as the quantity of fuel that can be drained from the fuel tank sump with the airplane in its normal level ground attitude after a fuel tank unusable fuel test has been performed.

(2) A fuel tank that is designed not to feed the engines under all flight conditions need be tested only for the flight regime for which it is designed (e.g., cruise conditions). Tanks which are not subject to aeroelastic effects of flight such as wing bending or tank flexing may have their unusable fuel quantity determined during a ground test. Suitable instructions on the conditions under which the tank may be used should be provided in the Airplane Flight Manual (AFM). It must be noted that the Part 25 requirements, such as fuel flow [§ 25.955(a)(2)] and fuel quantity gauge calibration (§ 25.1553) are also related to the unusable fuel quantity. These other requirements must also be considered when the unusable fuel quantity is being determined for each fuel tank.

b. **Procedures**.

(1) The cognizant propulsion engineer and flight test pilot should analyze the fuel system and tank geometry to determine the critical conditions for the specific tanks being considered, i.e., main and auxiliary or cruise tanks. Particular attention should be directed toward the fuel tank or cell geometry and orientation with respect to the longitudinal axis of the airplane and location of the fuel tank outlets (i.e., fuel pump inlets or pickups). Care should be taken in planning how the critical attitude conditions are tested so that the test procedure does not result in a non-conservative unusable fuel quantity.

(2) The term “most adverse fuel feed condition” is not intended to include radical or extreme conditions not likely to be encountered in operation. Judgment must be used in determining what maneuvers are appropriate to the type of airplane being tested. The test conditions should be selected using good judgment with regard to the kind of conditions the airplane under test will be subjected to in operation.

(3) After the most adverse fuel feed condition and the critical flight attitude have been determined for the specific fuel tanks being considered, the appropriate flight tests should be conducted. The flight testing should also investigate the effects of the following:

(i) Steady state sideslips anticipated during operation with the aircraft in both the approach and landing configurations.

(ii) For those airplanes capable of high roll and pitch rates, abrupt maneuvers should be considered.

(iii) A go-around condition at maximum acceleration, and maximum rotation rate to the maximum pitch attitude should be considered.

(iv) Effects of turbulence on unusable fuel quantity should be considered.

(4) If fuel pump failure would result in a significant reduction in usable fuel, the unusable fuel supply test should include a determination of this quantity. The effects of pump failure on the unusable fuel quantity should be presented in the Airplane Flight Manual.

(5) Auxiliary fuel tanks and fuel transfer tanks designed or restricted for use during cruise flight only (not suitable for takeoff and landing) should be tested for unusable fuel quantity by appropriate investigation of the cruise environment. This should include reasonable turbulence levels, asymmetrical power, adverse fuel feed/transfer configuration, etc.

(5) For additional relevant information, see discussion under Section 25.959, above, at paragraph d(1)(a).

d. **References.**

(1) Amendment 4b-12 (27 FR 2986, March 30, 1962).

(2) Amendment 25-AD (29 FR 18289, December 24, 1964).

(3) Amendment 25-23 (35 FR 5677, April 8, 1970).

(4) Notice 75-19 (40 FR 21866, May 19, 1975).

(5) Amendment 25-40 (42 FR 15043, March 17, 1977).

(6) FAA Order 8110.8, “Engineering Flight Test Guide for Transport Category Airplanes,” September 26, 1974.

(7) FAA Memorandum, June 19, 1981.

(8) FAA Memorandum, February 23, 1982.

(9) FAA Memorandum, August 1, 1994.

(10) FAA Memorandum, August 1997.

Section 25.961 Fuel system hot weather operation.

a. **Rule Text.**

(a) The fuel system must perform satisfactorily in hot weather operation. This must be shown by showing that the fuel system from the tank outlets to each engine is pressurized, under all intended operations, so as to prevent vapor formation, or must be shown by climbing from the altitude of the airport elected by the applicant to the maximum altitude established as an operating limitation under § 25.1527. If a climb test is elected, there may be no evidence of vapor lock or other malfunctioning during the climb test conducted under the following conditions:

(1) For reciprocating engine powered airplanes, the engines must operate at maximum continuous power, except that takeoff power must be used for the altitudes from 1,000 feet below the critical altitude through the critical altitude. The time interval during which takeoff power is used may not be less than the takeoff time limitation.

(2) For turbine engine powered airplanes, the engines must operate at takeoff power for the time interval selected for showing the takeoff flight path, and at maximum continuous power for the rest of the climb.

(3) The weight of the airplane must be the weight with full fuel tanks, minimum crew, and the ballast necessary to maintain the center of gravity within allowable limits.

(4) The climb airspeed may not exceed --

(i) For reciprocating engine powered airplanes, the maximum airspeed established for climbing from takeoff to the maximum operating altitude with the airplane in the following configuration:

(A) Landing gear retracted.

(B) Wing flaps in the most favorable position.

(C) Cowl flaps (or other means of controlling the engine cooling supply) in the position that provides adequate cooling in the hot-day condition.

(D) Engine operating within the maximum continuous power limitations.

(E) Maximum takeoff weight; and

(ii) For turbine engine powered airplanes, the maximum airspeed established for climbing from takeoff to the maximum operating altitude.

(5) The fuel temperature must be at least 110°F.

(b) The test prescribed in paragraph (a) of this section may be performed in flight or on the ground under closely simulated flight conditions. If a flight test is performed in weather cold enough to interfere with the proper conduct of the test, the fuel tank surfaces, fuel lines, and other fuel system parts subject to cold air must be insulated to simulate, insofar as practicable, flight in hot weather.

(Amdt. 25-11, 32 FR 6912, May 5, 1967, as amended by Amdt. 25-57, 49 FR 6848, Feb. 23, 1984)

b. **Intent of Rule.** The intent of this rule is to ensure that the fuel system provides uninterrupted fuel to the engines and APU during hot weather operations, and to require a specific minimum fuel system performance capability for turbine-powered airplanes.

c. **Background.**

(1) The regulatory history shows that this requirement originated from Section 417 of Civil Air Regulations (CAR) 4b, December 31, 1953. Amendment 25-AD (29 FR 18289, December 24, 1964) added Part 25 [New] to the Federal Aviation Regulations and replaced Part 4b of the CAR. It was part of the Agency recodification program announced in Draft Release 61-25, published in the Federal Register on November 15, 1961 (26 FR 10698). Part 25 [New] was published as a notice of proposed rulemaking in the Federal Register on June 2, 1964 (29 FR 7169), and given further distribution as Notice No. 64-28. This rule was recodified from CAR 4b.417 without any substantive changes.

(2) Notice of Proposed Rulemaking 65-43 (31 FR 93, January 5, 1966) proposed to revise this rule to introduce the requirement that fuel hot weather operating capability be shown up to the maximum operating altitude and to limit the climb airspeed of turbine powered airplanes to that established for climbing to the maximum operating altitude. Service experience and results of current and past certification programs had established with certainty that the fuel system should be proven satisfactory up to the maximum altitude established as an operating limitation, under test conditions closely duplicating operational conditions most conducive to vapor lock (namely the highest rate of climb). The following excerpt is from the preamble to the Notice:

> Section 25.961 would be amended to require that fuel system hot weather operating capability be shown up to the maximum operating altitude established as an operating limitation, and to limit the climb airspeed of turbine engine powered airplanes to that established for climbing to the maximum operating altitude. The current terminal test altitude is defective in two respects. For both turbine and reciprocating engine powered airplanes, this altitude at best provides only an arbitrary cutoff point for checking the fuel system for the effects of changing altitude upon fuel flow. The most important of these effects is vapor lock. Vapor lock may occur at altitudes greater than the terminal test altitude

> now derived under § 25.961. Its chief cause is a rate of climb great enough to force gases in hot fuel to boil out fast enough to restrict fuel passages. When Part 4b was promulgated, rates of climb above the altitudes derived under § 4b.417 were generally not great enough to cause vapor lock. Now, however, the available rates of climb, especially for turbine engine powered airplanes, are in many cases great enough to make vapor lock a significant problem at the higher altitudes. The FAA believes that the fuel system must be proven satisfactory up to the maximum altitude established as an operating limitation, under test conditions closely duplicating operation conditions most conductive to vapor lock. Section 25.961(a)(4) now requires climb airspeeds allowing compliance with the minimum climb requirement in § 25.65(a). This does not allow representative vapor lock investigations for turbine powered airplanes because the operational rates of climb may greatly exceed the specified minimum. To ensure that the test rates of climb for these airplanes will be those most conducive to vapor lock in actual operation (namely, the highest expected rates of climb). § 25.961(a)(4) would be amended to limit the present language to reciprocating engine powered airplanes and to require the test climb airspeed for turbine engine powered airplanes be no greater that the airspeed established by the applicant for climb to the maximum operating altitude."

Amendment 25-11 (32 FR 6906, May 5, 1967) followed Notice 65-43 and adopted the proposal. The following excerpt is from the preamble to that Amendment and provides additional insight as to the intent of the rule:

> The Notice proposed to amend § 25.961 to require that fuel system hot weather operating capability be shown up to the maximum operating altitude established as an operating limitation, and to limit the climb airspeed of turbine engine powered airplanes to that established for climbing to the maximum operating altitude.
>
> One commenter states that the proposal is not necessary for airplanes certificated for use with booster pumps that maintain the fuel system at a pressure greater than the vapor pressure of turbine fuels, up to the maximum operating altitude. The Administrator agrees. This amendment therefore excepts fuel systems having that capability, but is otherwise issued as proposed.

d. **Policy/Compliance Methods.**

(1) Acceptable methods of compliance include flight testing or conducting full scale ground tests supported by flight test data. Flight testing is discussed below. If ground testing is proposed, the testing should be conducted on:

- a production airplane fuel system;
- a mocked-up full scale fuel system (full scale fuel system rig); or
- a fuel pump/fuel system simulation rig that controls:
  - fuel temperature,
  - vent space pressures (altitude changes & rates of climb),
  - boost pump fuel flow,
  - actual pressure drops at inlet to the boost pump, and

- pressure drop at inlet to engine fuel control

[Note that compliance with the latter would eliminate the need for conducting actual hot fuel-hot day fuel flow tests on a production airplane.]

However, verification of fuel flow-fuel pressure performance on a production airplane at recorded flight test fuel temperature conditions should be accomplished by comparison to the ground rig test results. The requirements of § 25.1351(d) are related to this section.

(2) ***Fuel Temperature/Altitude Limitations.*** The rule specifically requires that the fuel system have a capability to satisfactorily operate with fuel at a minimum initial temperature of 110° F. In several instances applicants have proposed incorporating limitations on fuel temperature or altitude within the Airplane Flight Manual as a means of showing compliance with this regulation. Section 25.1527 requires the applicant to establish the maximum operating altitude as limited by structural, powerplant, functional, or equipment limitations. It is considered acceptable by the FAA to establish different maximum operating altitudes for different types of fuels, based on demonstration of compliance with the requirements of part 25 at altitudes up to the maximum operating altitude for each fuel (provided the limitation is operationally acceptable for the airplane type). Maximum fuel temperature limitations lower than 110°F are not allowed by the rule. Sections 25.961 and 25.1527 were not intended to allow a variable maximum operating altitude based on variable inflight conditions such as fuel temperature. If altitude limitations are used, those limitations should be fixed for the given fuel type and should be placed within the limitations section of the Airplane Flight Manual.

The intent of the rule is to ensure acceptable fuel system performance margins during hot weather operation, and the rule specifically requires that the capability be shown with a minimum fuel temperature of 110° F and "§ 2*5.961(a)(4)(ii) the maximum airspeed established for climbing from takeoff to the maximum operating altitude."* The required certification test performance ensures a reasonable fuel system performance margin which should offset fuel system performance deterioration which is expected to occur during the life of the airplane due to pump wear, and increased fuel flow requirements due to engine deterioration.

(3) The following excerpt from Advisory Circular 25-7A, "Flight Text Guide for Certification of Transport Category Airplanes," dated June 6, 1995, provides guidance on flight test compliance demonstration:

a. **Explanation**.

(1) A flight test is normally necessary to complete the hot weather operation tests. If a ground test is performed, it should closely simulate flight conditions. If a hot fuel climb test is elected, hot weather fuel systems tests should be conducted with hot fuel in the tanks normally used for takeoff and landing, and with the maximum number of engines drawing fuel from each tank, as is allowed in the airplane flight manual, to obtain the maximum anticipated fuel flow through the lines. In the case of

symmetrical fuel tank systems, the tests may be confined to one of each such system. Critical fuel that is unweathered or has not been exposed to long storage periods should be used during the tests. This ensures that the fuel has the maximum Reid vapor pressure (RVP) for which approval is requested. Fuel samples should be taken from the fuel tank prior to the test; for typical JET B (JP-4) type fuels, a minimum RVP of 3.0 has been required. The fuel temperature, just prior to takeoff, should be as close as practical to the maximum value for which operational approval is sought, but not less than 110° F as required by § 25.961(a)(5). If the fuel must be heated to this temperature, caution should be taken to prevent overheating during the process.

(2) The desirable outside ambient air temperature at the airport from which the tests are being conducted should be at least 85° F. If tests are performed in weather cold enough to interfere with test results, steps should be taken to minimize the effects of cold temperatures. This may be accomplished by insulating fuel tank surfaces, as appropriate; fuel lines and other fuel system components from cold air to simulate hot-day conditions. It should not be necessary to provide additional heat to the fuel after the original fuel sample is heated to temperature during the hot weather tests. However, if the fuel is used as the cooling medium for any heat exchangers, the maximum heat available to the fuel should be considered.

(3) If auxiliary pumps are being considered for use as emergency pumps, they should be inoperative. This test may be used to establish the maximum pressure altitude for operation with these pumps off. A fuel pressure failure is considered to occur when the fuel pressure decreases below the minimum prescribed by the engine manufacturer, or the engine does not operate satisfactorily.

b. **Test Procedures and Required Data.**

(1) The fuel temperature, just prior to takeoff, should be as close as practical to the maximum value for which operational approval is sought. If heating of the fuel is required, a takeoff and climb should be made as soon as possible after the fuel in the tank has been heated to avoid cooling of the fuel.

(2) Power settings should be maintained at the maximum approved levels for takeoff and climb in accordance with § 25.961(a)(2). The airspeed during the climb should not exceed that speed used in demonstrating the requirements specified in § 25.961(a)(4). While the regulations require the full fuel tanks for this test, experience has shown that may not always be the most critical. Generally full tanks results in the maximum head pressure over the tank pumps. A lesser tank quantity results in a lesser head pressure. A greater rate of climb results in more air per unit time being released in the feed lines during the climb. Rate of climb is dictated primarily by airplane weight. But airplane weight is a combination of payload and fuel state. Thus an analysis may be required to determine the critical combination of fuel quantity state and airplane weight which is operationally likely to occur.

(3) If the engines are normally operated with the auxiliary/emergency pumps “off,” they should remain “off” until fuel pressure failure occurs.

Restoration of fuel pressure should be noted and the climb continued to the maximum operating altitude selected by the applicant for certification. If a lower altitude is substantiated, appropriate limitations should be noted in the AFM.

(4) The tests should be conducted with the fuel system operating and configured normally, in accordance with the normal procedures outlined in the AFM. The following data should be recorded at reasonable time intervals:

(i) fuel temperature in the tank

(ii) engine fuel pressure, measured at the engine/airplane interface, (note: engine driven pump interstage pressure has also been an important parameter to measure when determining fuel feed performance) at the start of the test and during climb (note any pressure failure, fluctuation, or variation)

(iii) main and auxiliary/emergency fuel pump operation, as applicable

(iv) pressure altitude

(v) ambient air temperature

(vi) airspeed

(vii) engine power setting and operating parameters (i.e., engine pressure ratio, gas generator speed, fan speed, exhaust gas temperature, fuel flow, etc.)

(viii) comments on engine operation

(ix) fuel quantities in fuel tanks

(x) fuel grade or designation determined prior to test

(xi) airplane pitch and roll attitudes

(5) If significant fuel pressure fluctuations occur during testing of the critical flight conditions, but pressure failure does not occur, additional testing should be considered to determine that pressure failure may not occur during any expected operating mode. Also, the fuel system should be evaluated for vapor formation when switching from different fuel feed configurations, or at low fuel flow and idling approach and landing."

d. **References.**

(1) Civil Air Regulations 4b, December 31, 1953.

(2) Amendment 25-AD (29 FR 18289, December 24, 1964).

(3) Notice of Proposed Rulemaking 65-43 (31 FR 93, January 5, 1966).

(4) Amendment 25-11 (32 FR 6906, May 5, 1967).

(5) Advisory Circular 25-7A, “Flight Test Guide for Certification of Transport Category Airplanes,” June 6, 1995.

Section 25.963 Fuel tanks: general.

a. **Rule Text.**

(a) Each fuel tank must be able to withstand, without failure, the vibration, inertia, fluid, and structural loads that it may be subjected to in operation.

(b) Flexible fuel tank liners must be approved or must be shown to be suitable for the particular application.

(c) Integral fuel tanks must have facilities for interior inspection and repair.

(d) Fuel tanks within the fuselage contour must be able to resist rupture and to retain fuel, under the inertia forces prescribed for the emergency landing conditions in § 25.561. In addition, these tanks must be in a protected position so that exposure of the tanks to scraping action with the ground is unlikely.

(e) Fuel tank access covers must comply with the following criteria in order to avoid loss of hazardous quantities of fuel:

(1) All covers located in an area where experience or analysis indicates a strike is likely must be shown by analysis or tests to minimize penetration and deformation by tire fragments, low energy engine debris, or other likely debris.

(2) All covers must be fire resistant as defined in part 1 of this chapter.

(f) For pressurized fuel tanks, a means with fail-safe features must be provided to prevent the buildup of an excessive pressure difference between the inside and the outside of the tank.

(Doc. No. 5066, 29 FR 18291, Dec. 24, 1964, as amended by Amdt. 25-40, 42 FR 15043, March 17, 1977; Amdt. 25-69, 54 Fr 40354, Sep 29, 1989)

b. **Intent of Rule.** The intent of this rule is to ensure fuel tank integrity during normal, failure, ground and flight conditions, damage from external sources, and emergency landing conditions.

c. **Background.**

(1) The requirements included in this section for fuel tank access panel penetration and fire resistance were the result of service experience where uncontained engine debris, runway debris, access door, and tire fragment impact with lower wing skin fuel tank access panels made of cast aluminum resulted in fuel leakage and in one case, a fatal accident. In addition, service experience of fuel tank access panels made of nylon indicated special considerations are required. Poor fire resistance of nylon doors

increased the likelihood of fuel leaks, fire and fuel tank explosion. In several cases ground fires caused severe damage to nylon doors when adjacent tank structure was intact. In addition, testing of an airplane wing following an accident believed to have been caused by a lightning strike indicated that nylon doors provided an aperture in the fuel tank that resulted in arcing of fuel drain lines routed adjacent to the door opening.

(2) The regulatory history shows that this requirement originated from Section 420 of Civil Air Regulations (CAR) 4b, as per Amendment 4b-12 (27 FR 2986, March 30, 1962). Amendment 25-AD (29 FR 18289, December 24, 1964) added Part 25 [New] to the Federal Aviation Regulations and replaced Part 4b of the CAR. It was part of the Agency recodification program announced in Draft Release 61-25, published in the Federal Register on November 15, 1961 (26 FR 10698). Part 25 [New] was published as a notice of proposed rulemaking in the Federal Register on June 2, 1964 (29 FR 7169), and given further distribution as Notice No. 64-28. This rule was recodified from CAR 4b.420 without substantial change.

(3) Amendment 25-40 (42 FR 15034, March 17, 1977) followed two Notices of Proposed Rulemaking

- Notice 75-10 (40 FR 10802, March 7, 1975); and
- Notice 75-19 (40 FR 21866, May 19, 1975).

The amendments based on Notice 75-10 were deferred in the series of amendments titled "Miscellaneous Amendments" (41 FR 55454; December 20, 1976) so that they could be considered in conjunction with the final disposition of certain proposals in Notice 75-19. This amendment resulted in a revision of proposed § 25.963(f), which was not intended to ensure continued fuel flow after a regulator failure. The required fail-safe features are only intended to ensure the prevention of over-pressurization. In addition, the proposal was revised to require a means with fail-safe features to prevent the buildup of excessive pressure differential between the inside and outside of the tank.

(4) Notice of Proposed Rulemaking 88-10 (53 FR 18526, May 23, 1988) proposed to require that the fuel tank access panels on transport category airplanes be designed or located so as to minimize penetration by likely foreign objects, and be fire resistant. It also proposed to require that all turbine-powered airplanes operated in air carrier service after October 30, 1991, meet these new standards.

Amendment 25-69 (54 FR 40352, September 29, 1989) followed Notice 88-10 and adopted the proposal. Since then, the terminology has been changed from "*access panels*" to "*access covers*" to more accurately describe the parts and to avoid confusion with wing panels.

d. **Policy/Compliance Methods.**

(1) Acceptable methods of compliance, and in certain cases "required compliance methods," include drawing and schematic review together with a compliance (mock-up) inspection, ground tests, and analysis. (Also see Section 25.965.)

Consideration can be given to compliance by similarity to prior compliance with an industry standard, if applicable and service experience on applicants approved existing design on other model aircraft.

(2) Current FAA guidance for § 25.963(d) is as follows.

> Compliance fuel tanks cannot be located in areas of the airplane that would be within the initial ground contact area during an emergency landing conditions such as a wheels up landing or a landing gear collapse situation. Analysis of the airplane fuel tank locations during these conditions is typically conducted to show that contact with the runway and subsequent scraping action would not result in a fuel leak. In some airplane types applicants have installed external rails or structure to protect the fuel tanks.

Additionally, see guidance for § 25.994 in this Propulsion Mega AC that provides additional guidance concerning design considerations for airplane fuel systems and tanks during a wheels up landing.

(3) The following excerpt is from an FAA memorandum, entitled "Criteria for Body Fuel Tank Integrity During Wheels-up Landing, FAR Part 25.963(d)," dated August 6, 1982, which provides, guidance on this requirement:

> The need to account for debris. There is no need to consider or account for debris. The emergency landing condition (§ 25.561) referenced in § 25.963(d) assumes a landing on prepared runway surfaces with landing gear retracted (where applicable).
>
> Debris size, in demonstrating compliance with § 25.963(d). There have been no debris sizes considered based on the same rationale outlined . . . above. It is felt that damage anticipated from an uncontrolled crash landing situation not on an improved surface would be impossible to design for and there are no standards developed for such a situation.
>
> The airplane design and configuration that uses the fuselage skin as a wall of a fuel tank installed in the airplane fuselage contour must be evaluated to comply with the structural loads and inertia forces outlined in 25.561. In addition, structural features must be provided to prevent that part of the fuselage skin that acts as the fuel tank wall from contacting the runway surfaces. Certain previously accepted provisions such as devices called "skegs" (similar to a sled runner) have been installed on the exterior fuselage surface to hold the fuselage off the runway surface and to transfer the landing inertia loads into the main fuselage structure.
>
> There may be other design features that can be utilized that can achieve the same thing as far as protecting and preventing the skin from contacting the runway, thereby keeping the fuel tank wall integrity intact.

(4) ***Auxiliary Fuel Tanks Located Aft of Passenger Cabin***. The following excerpt is from an FAA Issue Paper applied to an auxiliary fuel tank located on the main cabin and cargo compartment floor, aft of the passenger cabin and forward of the cargo compartment.

Subject. Prevention of Hazards Caused by Leaks in Auxiliary Fuel Tanks with Passenger Compartments

Statement of Issue. The [local Aircraft Certification Office] received an application for a Supplemental Type Certificate (STC) from the applicant to install an Auxiliary Fuel System in the pressurized passenger compartment of [an airplane model]. Two inter-connected 300 Gallon (US) tanks will be installed on each side of the isle, aft of the passenger compartment and forward of the baggage compartment. Location of the fuel tank in this location is unique and was not specifically considered within the regulations or current FAA guidance provided in AC 25-8 "Auxiliary Fuel Tank Installations." An objective review and safety analysis of the new Aux. Fuel System installation is required to ensure that compliance with the applicable fuel system and crashworthiness requirements have been met.

Background. The two fuel tanks are located forward of the main engine rotorburst zone. The two tanks will be plumbed to function as a single source of auxiliary fuel to the main aircraft fuel system. Fuel transfer will be accomplished by the motive force of pressurized cabin air introduced above the normal full level of the tanks. As the auxiliary tanks are located above the aircraft main tank system, gravity will move auxiliary fuel through the aircraft vent/transfer line in the event of an inability to pressurize the tanks. The fuel, vent, and transfer valve, will be located for accessibility, for manual override. Auxiliary fuel quantity will be displayed on a separate indicator in the cockpit.

FAA Position. The FAA has reviewed Part 25 and Advisory Circular (AC) 25-8 for applicability to the installation of auxiliary fuel tanks mounted in the aft fuselage adjacent to the passenger compartment of the aircraft. Location of the tank in the aft fuselage may result in the potential for operation of the airplane outside the C.G. limits if fuel is trapped in the tank. Failure modes and effects analysis of the fuel transfer system is required to ensure that unannunciated failures within the system will not result in operation of the airplane outside the established C.G. limits. Previous aft fuselage fuel tank installations have required dedicated failure-to-transfer annunciations and appropriate AFM procedures to address this unsafe condition. In addition to the design precautions outlined in this AC, measures are required to be taken to prevent fuel leakage from the tanks caused by emergency landing conditions, high G loads or airframe/tank deflection which could damage or distort fuel system components and jeopardize continued safe operation of the airplane. Section 25.561 states *"(a) The airplane, although it may be damaged in emergency landing conditions on land or water, must be designed as prescribed in this section to protect each occupant under those conditions."* and *"(c) The supporting structure must be designed to restrain, under all loads up to those specified in paragraph (b)(3) of this section, each item of mass that could injure an occupant if it came loose in a minor crash landing."* Positive means to prevent rupture of the fuel tank by cargo under the emergency landing conditions must be provided. Loading instructions alone are considered insufficient, as are assumptions of design features that may be provided as part of another modification. (See . . . under "Applicant's Position" for a reference to baggage restraints which will be provided by an interior installer.)

In addition to structural restraints, the fuel system should be adequately protected from the effects of a fire occurring in the cargo compartment. Because the potential consequence of a flame penetration into the fuel tank, the cargo

compartment liner should meet the requirements of Appendix F, part III of Part 25, regardless of the compartment classification.

Additional shielding and shrouding may be necessary to protect passengers and crew from any fuel leakage which might be caused by structural deformation of the tanks under all load conditions. The tank should be designed to withstand the pressure differential resulting from the pressure inside the tank at max. cruise ambient altitude and that of the cabin at the max. pressure relief valve setting. That is, loads corresponding to the max. relief valve setting by a factor of 1.33. omitting other loads. This is a limit load condition which requires a safety factor of 1.5 to obtain ultimate loads. In addition to the above loading conditions, Emergency Landing Conditions (ref. § 25.561) must be evaluated to assure that tank deflection and deformation does not allow fuel leakage from the tanks into the cabin.

The cargo barrier used to separate the auxiliary fuel system from the cargo should be designed to contain up to the maximum cargo loading for which the compartment is approved under all load conditions including the emergency landing conditions. To preclude rupture and provide durability, the tank face sheet thickness should be sufficient for the applicable load requirements and to prevent accidental damage(such as baggage handling). The barrier should prevent any type of bulk cargo, particularly slender or sharp objects, from penetrating components of the auxiliary fuel system, and be structurally capable of preventing cargo from contacting the fuel system installation under all load conditions including emergency landing conditions.

Means to prevent auxiliary fuel component sharp edges from penetrating the tank surface due to deflection of the surface under crash load conditions should be provided. This should include consideration of penetration or leakage of the tank near openings such as float shut off valves, fuel quantity probes.

If the barrier is flexible, consideration should be given to deformation or displacement of the barrier when under load.

Applicant Position. The structural analysis, design and installation of the tank attachment structure is being carried out by the airframe manufacturer and will become part of the STC. The tanks are designed to be capable of a 9g crash condition without deformation or leakage.

The baggage compartment will be placarded to ensure that the baggage is stowed adjacent to the tanks aft wall, thus reducing the likelihood of baggage induced point impact loads.

Baggage restraints will be provided by the interior installer.

Tanks will be enclosed by protective panels and effectively isolated from both the baggage and passenger compartment. Access for emergency valve actuation will be through a locked access panel, with the key accessible only to the crew. The double wall construction of the tank provides the required vapor barrier / shroud to contain any leak which may occur in the inner tank wall. To ensure that the outer tank walls / shroud are intact and no latent failure exists, a vacuum test of the shroud system will be required whenever the protective close-out panels are removed and reinstalled and at periodic maintenance intervals. The panels will be placarded / stenciled (on the back face) to ensure the same panels are re-installed after removal for maintenance or inspection.

The aft close-out panel which isolates the tanks from the baggage compartment will be fabricated from a composite material sufficient to protect the tanks from a baggage compartment fire and from punctures or damage caused by the contents of the cargo compartment under all required loads (operating, gusts and crash). The aft close-out panels shall be impact resistant to an impact energy of not less than 108 lb./in. and shall be qualified in accordance with the appropriate airplane Specification.

In addition, the close-out panels shall also meet the flammability requirements of § 25.853 and § 25.855.

The auxiliary fuel system is designed so that the tanks, fuel lines, fittings, connections, valves and all other components are shrouded so that any possible leaks will not present a fire hazard.

The shroud system is designed and tested to the maximum operating pressure, plus the required safety factor and all components are fuel compatible. All shrouds are vented and drained overboard to prevent fuel vapor accumulation and to provide a means to detect leakage.

The entire system within the passenger compartment and within the pressurized area of the fuselage is shrouded and vented.

The auxiliary fuel tanks are constructed of double-wall vented honeycomb type construction. The inner wall is the tank and the outer wall is the shroud. All fuel and vent fittings attached to the tanks are shrouded and all connections have double seals with leak witness path between seals.

The tank cavity is vented overboard. Cabin air enters the cavity through check valves to prevent accumulation of vapors in the cavity. This also assures that there will be a positive pressure in the cavity, with the airflow overboard.

All secondary barriers are vented overboard through the existing overboard drain mast and designed to prevent back flow.

Conclusion. The FAA has reviewed the applicant's position and has had several discussions with its representatives concerning the requirement for demonstrating, via testing and/or analysis, that both the primary and secondary barrier that isolate the passenger compartment from the fuel should remain intact (i.e., no fuel or vapor leakage) during all normal operating conditions, load conditions defined in § 25.561, and cargo loading or shifting crash conditions. The applicant will show through testing and/or analysis that no rupture of the tank, lines, drain lines, fittings, shroud and vent lines and system components will allow fuel or fuel vapor to enter the passenger compartment. In addition, the cargo restraint system, as installed by a third party (an interiors installer), will be shown to protect the tank from impact damage caused penetration by objects carried in the cargo compartment.

Based on the applicant satisfactorily demonstrating the ability of the aux. fuel system to maintain this integrity under the load conditions imposed by emergency landing conditions, high G loads or airframe / tank deflection, this Issue Paper is considered closed.

(5) Current transport category airplane policy and compliance material for this section has been contained in policy as reflected in Advisory Circular 25.963-1,

"Fuel Tank Access Covers," dated July 29,1992. However, AC 25.963-1 has been cancelled with the issuance of this Propulsion Mega AC and its material has been incorporated in total, below.

Advisory Circular 25.963-1

FUEL TANK ACCESS COVERS

1. **PURPOSE.** This advisory circular (AC) sets forth a means of compliance with the provisions of Title 14, Code of Federal Regulations (CFR) part 25, commonly referred to as Part 25 of the Federal Aviation Regulations (FAR), dealing with the certification requirements for fuel tank access covers on turbine powered transport category airplanes. Guidance information is provided for showing compliance with the impact and fire resistance requirements of § 25.963(e).

2. **RELATED FAR SECTIONS.** The contents of this AC are considered by the FAA in determining compliance of the fuel tank access covers with § 25.963(e). Section 121.316 also requires each turbine-powered transport category airplane operated in air carrier or commercial service after October 30, 1991, to meet the standards of § 25.963(e).

3. **BACKGROUND.** Fuel tank access covers have failed in service due to impact with high speed objects such as failed tire tread material and engine debris following engine failures. Failure of an access cover on a wing fuel tank may result in the loss of hazardous quantities of fuel which could subsequently ignite.

4. **IMPACT RESISTANCE.**

a. All fuel tank access covers must be designed to minimize penetration and deformation by tire fragments, low energy engine debris, or other likely debris, unless the covers are located in an area where service experience indicates a strike is not likely. The rule does not specify rigid standards for impact resistance because of the wide range of likely debris which could impact the covers. The applicant should, however, choose to "minimize penetration and deformation" by testing covers using debris of a type, size, trajectory, and velocity that represents conditions anticipated in actual service for the airplane model involved. There should be no hazardous quantity of fuel leakage after impact. The access covers, however, need not be more impact resistant than the contiguous tank structure.

b. In the absence of a more rational method, the following criteria should be used for evaluating access covers for impact resistance.

(1) Covers located within 30 degrees inboard and outboard of the tire plane of rotation, measured from center of tire rotation with oleo strut in the nominal position, should be evaluated. The evaluation should be based on the results of impact tests using tire tread segments equal to 1 percent of the tire mass traveling at airplane rotation speed (VR), and distributed over an impact area equal to 1 1/2 percent of the total tread area.

(2) For turbine powered airplanes, covers located within 15 degrees forward of the front engine compressor or fan plane measured form center of rotation to 15 degrees aft of the rearmost engine turbine plane measured form center of

rotation, should be evaluated for impact from small fragments (shrapnel) with energies referred to in Advisory Circular 20-128, “Design Considerations for Minimizing Hazards Caused by Uncontained Turbine Engine and Auxiliary Power Unit Rotor and Fan Blade Failure,” issued March 9, 1988. The covers need not be designed to withstand impact from high energy engine fragments such as engine rotor segments or propeller blade fragments.

5. **FIRE RESISTANCE.**

a. All fuel tank access covers must be fire resistant. The definition of fire resistant, as given in 14 CFR part 1, means the capacity to withstand the heat associated with fire at least as well as aluminum alloy in dimensions appropriate for the purpose for which they are used. For the purpose of complying with this requirement, the access cover is assumed to be subjected to fire from outside the fuel tank. The fuel tank access covers need not be more fire resistant than the contiguous tank structure.

b. Access covers, not as fire resistant as contiguous tank structures, should be tasted for five minutes using a burner producing a 2000° F flame. The test burner and procedures for instrumentation and calibration should be as defined in Advisory Circular 20-135, Powerplant Installation and Propulsion System Component Fire Protection Test Methods, Standard, and Criteria, Issued February 6, 1990. The test cover should be installed in a test fixture representative of the actual installation in the airplane. Credit may be allowed for fuel as a heat sink if covers will be protected by fuel during all likely conditions. The maximum amount of fuel that should be allowed during this test is the amount associated with reserve fuel. Also, the static fuel pressure head should be accounted for during the burn test. There should be no burn-through or fuel leakage at the end of the tests; although damage to the cover and seal is permissible.

■■

END OF ADVISORY CIRCULAR 25.963-1

d. **References.**

(1) Civil Air Regulations 4b, per Amendment 4b-12 (27 FR 2986, March 30, 1962).

(2) Amendment 25-AD (29 FR 18289, December 24, 1964).

(3) Notice of Proposed Rulemaking 75-10 (40 FR 10802, March 7, 1975).

(4) Notice of Proposed Rulemaking 75-19 (40 FR 21866, May 19, 1975).

(5) Amendment 25-40 (42 FR 15034, March 17, 1977).

(6) Notice of Proposed Rulemaking 88-10 (53 FR 18526, May 23, 1988).

(7) Amendment 25-69 (54 FR 40352, September 29, 1989).

(8) Advisory Circular 25-963-1, “Fuel Tank Access Covers,” July 29, 1992 [incorporated in total into this Propulsion Mega AC].

(9) Advisory Circular 25.994-1, “Design considerations to Protect Fuel Systems During a Wheel-Up Landing,” July 24, 1986.

Section 25.965 Fuel tank tests.

a. **Rule Text.**

(a) It must be shown by tests that the fuel tanks, as mounted in the airplane, can withstand, without failure or leakage, the more critical of the pressures resulting from the conditions specified in paragraphs (a)(1) and (2) of this section. In addition, it must be shown by either analysis or tests, that tank surfaces subjected to more critical pressures resulting from the condition of paragraphs (a)(3) and (4) of this section, are able to withstand the following pressures:

(1) An internal pressure of 3.5 psi.

(2) 125 percent of the maximum air pressure developed in the tank from ram effect.

(3) Fluid pressures developed during maximum limit accelerations, and deflections, of the airplane with a full tank.

(4) Fluid pressures developed during the most adverse combination of airplane roll and fuel load.

(b) Each metallic tank with large unsupported or unstiffened flat surfaces, whose failure or deformation could cause fuel leakage, must be able to withstand the following test, or its equivalent, without leakage or excessive deformation of the tank walls:

(1) Each complete tank assembly and its supports must be vibration tested while mounted to simulate the actual installation.

(2) Except as specified in paragraph (b)(4) of this section, the tank assembly must be vibrated for 25 hours at an amplitude of not less than 1/32 of an inch (unless another amplitude is substantiated) while 2/3 filled with water or other suitable test fluid.

(3) The test frequency of vibration must be as follows:

(i) If no frequency of vibration resulting from any r.p.m. within the normal operating range of engine speeds is critical, the test frequency of vibration must be 2,000 cycles per minute.

(ii) If only one frequency of vibration resulting from any r.p.m. within the normal operating range of engine speeds is critical, that frequency of vibration must be the test frequency.

(iii) If more than one frequency of vibration resulting from any r.p.m. within the normal operating range of engine speeds is critical, the most critical of these frequencies must be the test frequency.

(4) Under paragraphs (b)(3) (ii) and (iii) of this section, the time of test must be adjusted to accomplish the same number of

vibration cycles that would be accomplished in 25 hours at the frequency specified in paragraph (b)(3)(i) of this section.

(5) During the test, the tank assembly must be rocked at the rate of 16 to 20 complete cycles per minute, through an angle of 15° on both sides of the horizontal (30° total), about the most critical axis, for 25 hours. If motion about more than one axis is likely to be critical, the tank must be rocked about each critical axis for 12/1/2/ hours.

(c) Except where satisfactory operating experience with a similar tank in a similar installation is shown, nonmetallic tanks must withstand the test specified in paragraph (b)(5) of this section, with fuel at a temperature of 110°F. During this test, a representative specimen of the tank must be installed in a supporting structure simulating the installation in the airplane.

(d) For pressurized fuel tanks, it must be shown by analysis or tests that the fuel tanks can withstand the maximum pressure likely to occur on the ground or in flight.

(Doc. No. 5066, 29 FR 18291, Dec. 24, 1964, as amended by Amdt. 25-11, 32 FR 6913, May 5, 1967; Amdt. 25-40, 42 FR 15043, March 17, 1977)

b. **Intent of Rule.** The intent of this rule is self-evident.

c. **Background.**

(1) Historically, the requirements of paragraphs (a), (b) and (c) of this section originated in Civil Air Regulations 4b, as per Amendment 4b-12 (27 FR 2986, March 30, 1962). Amendment 25-AD (29 FR 18289. December 24, 1964) added Part 25 [New] to the Federal Aviation Regulations and replaced Part 4b of the Civil Air Regulations. It was part of the Agency recodification program announced in Draft Release 61-25, published in the Federal Register on November 15, 1961 (26 FR 10698). Part 25 [New] was published as a notice of proposed rulemaking in the Federal Register on June 2, 1964 (29 FR 7169), and given further distribution as Notice No. 64-28. These requirements were recodified from CAR 4b without substantive change.

(2) Notice of Proposed Rulemaking 65-43 (31 FR 93, January 5, 1966) proposed to amend the CAR 4b requirements of subparagraph (b) as follows:

Fuel tank tests. Section 25.965 would be amended to eliminate the requirement that certain fuel tanks undergo vibration test frequencies of 0.9 times the maximum continuous engine speed, and to require a test frequency of 2,000 c.p.m. instead. This factor, being related to engine speed, is inappropriate since it suggests that the purpose of the test is to substantiate specific tank-engine combinations. This is not the case. The purpose of § 25.975 is simply to substantiate the integrity of the fuel tank itself. Furthermore, the impact of the factor 0.9 upon tanks in turbine engine powered airplanes, when coupled with the required test amplitude of vibration (1/32 inch) is unduly severe since turbine engine maximum continuous r.p.m. values are so great. A test frequency of

> 2,000 c.p.m. has been shown to be adequate for testing the integrity of the tank itself.

Amendment 25-11 (32 FR 6906, May 5, 1967) followed Notice 65-43 and adopted the proposal. The following excerpt is from the preamble to that Amendment and discusses the public comments submitted in response to the Notice

> The Notice proposed to amend § 25.965 by replacing the present fuel tank vibration requirement based on a factor (0.9) related to engine speed with a requirement based on a specific vibration frequency (2,000 c.p.m.).
>
> One commenter objects to this proposal on the grounds that it appears to be a relaxation that would downgrade safety. The Administrator disagrees. This amendment, like its predecessor, applies only where no frequency of vibration resulting from any r.p.m. within the normal operating range of engine speeds is critical. This amendment does not replace the survey of engine speeds conducted under § 25.965(b)(3)(ii) and (iii) to determine that no critical condition is overlooked. For the purpose of the test covered by this amendment (that is, substantiation of the tank itself rather than substantiation of tank-engine combinations), a test frequency of 2,000 c.p.m., when imposed at the required test amplitude of 1/32 inch, has been shown to be severe enough to ensure the Integrity of the tank itself. This comment cannot, therefore, be accepted. This amendment is issued as proposed.

(3) Notice of Proposed Rulemaking 75-19 (40 FR 21866, May 17, 1975) proposed to revise this section to include paragraph (d). The following explanation was given.

> The use of pressurized fuel tanks is not specifically provided for in the fuel tank test requirements. This proposal would include consideration of the pressure effects of a tank pressurization system.

Amendment 25-40 (42 FR 15034, March 17, 1977) followed Notice 75-19 and adopted the proposal. The following excerpt is from the preamble to that Amendment and provides additional insight as to the intent of this rule:

> One commenter interprets § 25.965(d) to mean that only a pressure test is required for non-metallic fuel tanks. The commenter recommended that slosh testing be added to proposed new § 25.965(d) as a requirement for non-metallic tanks in transport airplanes. The FAA does not agree with the recommendation since § 25.965(c) already requires slosh testing of all non-metallic tanks except where satisfactory experience with a similar tank in a similar installation can be shown.
>
> Two commenters concur with the proposal, but believe the words “analysis or” should be inserted in conjunction with the word “tests” because analysis may be adequate in showing compliance, either alone or when combined with a limited test program. Furthermore, when the tank is an integral tank the structural loading, including aerodynamic loads, is not always amenable to test. The FAA agrees, and the proposal is revised by inserting the words “analysis or” before the word “tests.”

d. **Policy/Compliance Methods.**

(1) Acceptable methods of compliance, and in certain cases "required compliance methods," include drawing and schematic review together with a compliance (mock-up) inspection, ground and flight tests, as applicable, and analysis. Consideration can be given to compliance by similarity to prior compliance with an industry standard, if applicable, and service experience on applicants approved existing design on other model aircraft.

(2) ***Slosh Testing Requirements***. The following excerpts are from correspondence between (a) an airplane manufacturer and (b) the FAA, concerning guidance on fuel slosh testing requirements.

(a) **[Airplane manufacturer inquiry]** Federal Aviation Regulation 25. 965(b) implies that tests are necessary for tanks with large unsupported or unstiffened flat surfaces. Our examination of the tank indicates that the vibration and/or slosh tests may not be necessary because of the compact, rigid construction. The specific dimensions of the rear tank are as follows: Width, 38"; length, 38. 7" and the depth of the outer skin, 17." The outer skin is .063" thick and chem-milled to .043." The largest unsupported panel of the inner skin is approximately l0"xl5" and this would be the middle bottom panel. This skin is .040" thick, chem-milled to .023." The chem-milling is done in the center of the panels, with an outer frame of about 1," with a .040" thickness remaining.

Recently, this region received correspondence from the foreign authority informing us of their latest special requirements and, also, making comments on the compliance check list for this project. They state: "§ 25.965 Vibration tests to paragraph (b) would be required." A copy of the comments are also attached to this memorandum. This region considers this comment to be of an advisory nature only. However, in light of their specific statement, your opinion regarding vibration and slosh tests is solicited. We feel that the design of the tank would not require them."

(b) [**FAA Response**] We have evaluated the data and information concerning the auxiliary fuel tank installation. We agree that a vibration and/or slosh-tank as described in § 25.965(b) for this tank configuration is not necessary since the tank is of double walled construction (tank within a tank), adequate internal baffling and compartmentation are provided, and the tank dimensions provide an adequate supported structure.

We do question the advisability of chem-milling the inner skins to .023" thickness. We feel this thinner material would be more susceptible to leaking due to corrosion caused by water and other contaminants that will be present in the jet fuel. Reduction of the skin gauge from .040" to .023" does not significantly reduce the weight if that was a consideration. The .023" gauge may be subject to "oil canning" and combined with corrosion effects, makes leaking a greater probability.

d. **References.**

(1) Civil Air Regulations 4b, per Amendment 4b-12 (27 FR 2986, March 30, 1962).

(2) Amendment 25-AD (29 FR 18289, December 24, 1964).

(3) Notice of Proposed Rulemaking 65-43 (31 FR 93, January 5, 1966).

(4) Amendment 25-11 (32 FR 6906, May 5, 1967).

(5) Notice of Proposed Rulemaking 75-19 (40 FR 21866, May 17, 1975).

(6) Amendment 25-40 (42 FR 15034, March 17, 1977).

Section 25.967 Fuel tank installations.

a. **Rule Text.**

(a) Each fuel tank must be supported so that tank loads (resulting from the weight of the fuel in the tanks) are not concentrated on unsupported tank surfaces. In addition --

(1) There must be pads, if necessary, to prevent chafing between the tank and its supports;

(2) Padding must be nonabsorbent or treated to prevent the absorption of fluids;

(3) If a flexible tank liner is used, it must be supported so that it is not required to withstand fluid loads; and

(4) Each interior surface of the tank compartment must be smooth and free of projections that could cause wear of the liner unless --

(i) Provisions are made for protection of the liner at these points; or

(ii) The construction of the liner itself provides that protection.

(b) Spaces adjacent to tank surfaces must be ventilated to avoid fume accumulation due to minor leakage. If the tank is in a sealed compartment, ventilation may be limited to drain holes large enough to prevent excessive pressure resulting from altitude changes.

(c) The location of each tank must meet the requirements of § 25.1185(a).

(d) No engine nacelle skin immediately behind a major air outlet from the engine compartment may act as the wall of an integral tank.

(e) Each fuel tank must be isolated from personnel compartments by a fumeproof and fuelproof enclosure.

b. **Intent of Rule.** The intent of this rule is to minimize fuel leakage and the effects of fuel leakage.

c. **Background.** The regulatory history shows that this requirement originated from Section 422 of the Civil Air Regulations (CAR) 4b, per Amendment 4b-12 (27 FR 2986, March 30, 1962). Amendment 25-AD (29 FR 18289, December 24, 1964) added Part 25 [New] to the Federal Aviation Regulations and replaced Part 4b of the CAR. It was part of the Agency recodification program announced in Draft Release 61-25, published in the Federal Register on November 15, 1961 (26 FR 10698). Part 25 [New] was published as a notice of proposed rulemaking in the Federal Register on June 2, 1964 (29 FR 7169), and given further distribution as Notice No. 64-28. This rule

was recodified from CAR 4b.422 without substantive change, and has remained virtually unchanged since that time.

d. **Policy/Compliance Methods.**

(1) Acceptable methods of compliance, and in certain cases "required compliance methods," include drawing and schematic review together with a compliance (mock-up) inspection, and ground and flight drainage and ventilation tests. The applicant must supply system functioning and test proposals which address the conditions that need to be investigated to show compliance with § 25.967(b) and (e).

Consideration should be given to requiring the installation of fuel system components such as fuel quantity capacitance probes, fuel level floats, fuel lines and any other components that could induce concentrated loads on primary structure or tank liner attach points during the slosh and vibration tests.

(2) ***Secondary fuel barriers [§ 25.967(e)].*** Historically, compliance with this regulation has typically been shown by use of double-walled fuel tanks, shrouds around fuel lines (including vent lines) located within the pressurized personnel compartment, and special secondary fuel tank sealant coatings. Guidance for this section can be obtained from Chapter 2 of Advisory Circular 25-8, "Auxiliary Fuel System Installations," which has been incorporated in total into this Propulsion Mega AC under Section 25.952.

(3) ***Secondary Fuel Barrier Coatings.*** Historically, the FAA [and the European Joint Aviation Authorities (JAA)] have accepted the use of secondary fuel barrier coatings on fuel tank surfaces adjacent to compartments. However, the use of coatings has not been approved on fuel lines. The use of coatings on fuel tank fittings that are integral to the tank may be acceptable if the coating was applied in a manner that would not allow a leak at the interface with any shrouded couplings. If secondary fuel barrier coatings are used the following should be conferred.

Service experience indicates that fuel leakage may occur when secondary fuel barrier coatings are not properly applied or structural failure mechanisms are not accounted for in the tank design. For example, leaks have occurred on fuel tanks where the coating was not properly applied around fuel tank penetration such as rivets. During spraying of the coating shadowing of areas around the rivet occurred resulting of no or thin coating around the rivet. Manufacturers have found that application of sealant in corners and around rivets that provides a smooth surface for application of the secondary barrier coating reduces the likelihood of mis-application of the coating. Structural failures have resulted in tearing of the coating. In one case, failure of a preloaded bolt that was coated with the secondary barrier coating resulted in the bolt head penetrating the coating which resulted in a leak. Installation of a bolt head retention system was required by an Airworthiness directive so that failure of the bolt would not cause seal failure.

d. **References.**

(1) Civil Air Regulations (CAR) 4b, per Amendment 4b-12 (27 FR 2986, March 30, 1962).

(2) Amendment 25-AD (29 FR 18289, December 24, 1964).

(3) Advisory Circular 25-8, “Auxiliary Fuel System Installations,” May 2, 1986 [incorporated in total into this Propulsion Mega AC at Section 25.952]

Section 25.969 Fuel tank expansion space.

a. **Rule Text.**

Each fuel tank must have an expansion space of not less than 2 percent of the tank capacity. It must be impossible to fill the expansion space inadvertently with the airplane in the normal ground attitude. For pressure fueling systems, compliance with this section may be shown with the means provided to comply with § 25.979(b).

(Amdt. 25-11, 32 FR 6913, May 5, 1967)

b. **Intent of Rule.** The intent of this rule is to ensure that airplane fuel tanks have a 2 percent expansion space that cannot be inadvertently overfilled.

c. **Background.**

(1) The regulatory history shows that this requirement originated from Section 424 of the Civil Air Regulations (CAR) 4b, per Amendment 4b-12 (27 FR 2986, March 30, 1962). Amendment 25-AD (29 FR 18289, December 24, 1964) added Part 25 [New] to the Federal Aviation Regulations and replaced Part 4b of the CAR. It was part of the Agency recodification program announced in Draft Release 61-25, published in the Federal Register on November 15, 1961 (26 FR 10698). Part 25 [New] was published as a notice of proposed rulemaking in the Federal Register on June 2, 1964 (29 FR 7169), and given further distribution as Notice No. 64-28. This rule was recodified from CAR 4b.424 without substantive change.

(2) Notice of Proposed Rulemaking 65-43 (31 FR 93, January 5, 1966) proposed to revise this rule to include reference to the fuel shutoff provisions of the current § 25.979(b).

Amendment 25-11 (32 FR 6906, May 5, 1967) followed Notice 65-43 and adopted the proposal. The following excerpt is from the preamble to that Amendment:

> The Notice proposed to amend § 25.969 to provide that an automatic shutoff must be provided, for pressure fueling systems, as the means of showing compliance with the current requirement that it must be impossible to fill the fuel tank expansion space inadvertently.
>
> One commenter objects for the following reasons: The commenter states that this means of complying with present § 25.969 should not be limited to the proposed automatic shutoff device and that such a limitation would involve unnecessary dictation of design with respect to the means for preventing the filling of the expansion space. The Administrator agrees. For this reason, and to locate all pressure fueling provisions together, this amendment places the automatic fuel content limiting means requirement in § 25.979(b) and, to avoid unnecessary duplication, provides in § 25.969 (which is otherwise unchanged)

that "for pressure fueling systems, compliance with this section may be shown with the means provided to comply with § 25.979(b)."

The commenter states that the substance of the proposed change is already covered in § 25.979(b). The Administrator disagrees. This proposal, like § 25.969, covers only the limitation of fuel quantity. Section 25.979(b), however, covers protection from damaging overpressures that may result if (1) the fuel quantity limiting means fails, or (2) overpressures are transmitted, without "failure" of the fuel quantity limiting means, such as could occur, for example, where air in the tank does not escape under an abnormally high fueling source pressure (so that fuel quantity itself does not exceed "approved" limits) and the air then becomes part of the means by which overpressures are transmitted to the fuel system.

d. **Policy/Compliance Methods.**

(1) Acceptable methods of compliance, and in certain cases "required compliance methods," include drawing and schematic review, together with a compliance (mock-up) inspection of tank fueling and ground drainage tests. The applicant must supply system functioning and test proposals which address the conditions that need to be investigated to show compliance with § 25.969.

(2) The following guidance is applicable:

The requirement of § 25.969 is specific in that each fuel tank must have two percent expansion space. This has been interpreted to require that the expansion space be located in the tank itself and not in the vent lines of the tank. [*See also guidance from AC 25-8 which has been incorporated into this Propulsion Mega AC, under Section 25.952.]* The requirement states further that the tank must be vented from the top of the tank space so as to be effective under any normal flight conditions.

- The comparable requirement for design of military airplanes has been three percent expansion space for many years.
- The two percent expansion space value in the rule appears to be reasonable. If it is assumed that kerosene expands .45 percent/10°F., it can be seen that the two percent value does not provide an excessive design margin.

d. **References.**

(1) Civil Air Regulations (CAR) 4b, per Amendment 4b-12 (27 FR 2986, March 30, 1962).

(2) Amendment 25-AD (29 FR 18289, December 24, 1964).

(3) Notice of Proposed Rulemaking 65-43 (31 FR 93, January 5, 1966).

(4) Amendment 25-11 (32 FR 6906, May 5, 1967).

(5) Advisory Circular 25-8, “Auxiliary Fuel System Installations,” May 2, 1986 [incorporated in total into this Propulsion Mega AC at Section 25.952]

Section 25.971 Fuel tank sump.

a. **Rule Text.**

(a) Each fuel tank must have a sump with an effective capacity, in the normal ground attitude, of not less than the greater of 0.10 percent of the tank capacity or one-sixteenth of a gallon unless operating limitations are established to ensure that the accumulation of water in service will not exceed the sump capacity.

(b) Each fuel tank must allow drainage of any hazardous quantity of water from any part of the tank to its sump with the airplane in the ground attitude.

(c) Each fuel tank sump must have an accessible drain that --

(1) Allows complete drainage of the sump on the ground;

(2) Discharges clear of each part of the airplane; and

(3) Has manual or automatic means for positive locking in the closed position.

b. **Intent of Rule.** The intent of this rule is to ensure that the fuel tanks are designed to accumulate, isolate and drain away water entering the fuel tanks during refueling, fuel venting and condensation. The fuel tank sump requirements are intended to provide a minimum sized collection point for water so that any water that collects within the tank can be drained from the tank without hazardous quantities being fed to the engines or other critical equipment such as an APU.

c. **Background**. The regulatory history shows that this requirement originated from Section 424 of the Civil Air Regulations (CAR), December 31, 1953. Amendment 25-AD (29 FR 18289, December 24, 1964) added Part 25 [New] to the Federal Aviation Regulations and replaced Part 4b of the CAR. It was part of the Agency recodification program announced in Draft Release 61-25, published in the Federal Register on November 15, 1961 (26 FR 10698). Part 25 [New] was published as a notice of proposed rulemaking in the Federal Register on June 2, 1964 (29 FR 7169), and given further distribution as Notice No. 64-28. This rule was recodified from CAR 4b.424 without substantive change, and has remained virtually unchanged since that time.

d. **Policy/Compliance Methods.**

(1) Acceptable methods of compliance, and in certain cases “required compliance methods,” include drawing and with a compliance (mock-up) inspection and ground drainage tests. The applicant must supply system functioning and test proposals which address the conditions that need to be investigated to show compliance with § 25.971(a), (b), and (c).

(2) Collection of water within fuel tanks has resulted in many cases of fuel system malfunctions, including false fuel quantity indicating system (FQIS) readings, inability to transfer fuel, and engine power interruption. Sumping of fuel tanks should be carried out following each refueling. In some cases airlines have specified a minimum sumping interval of once per day.

The following figure provides a graphical representation of terms used to describe different portions of airplane fuel systems.

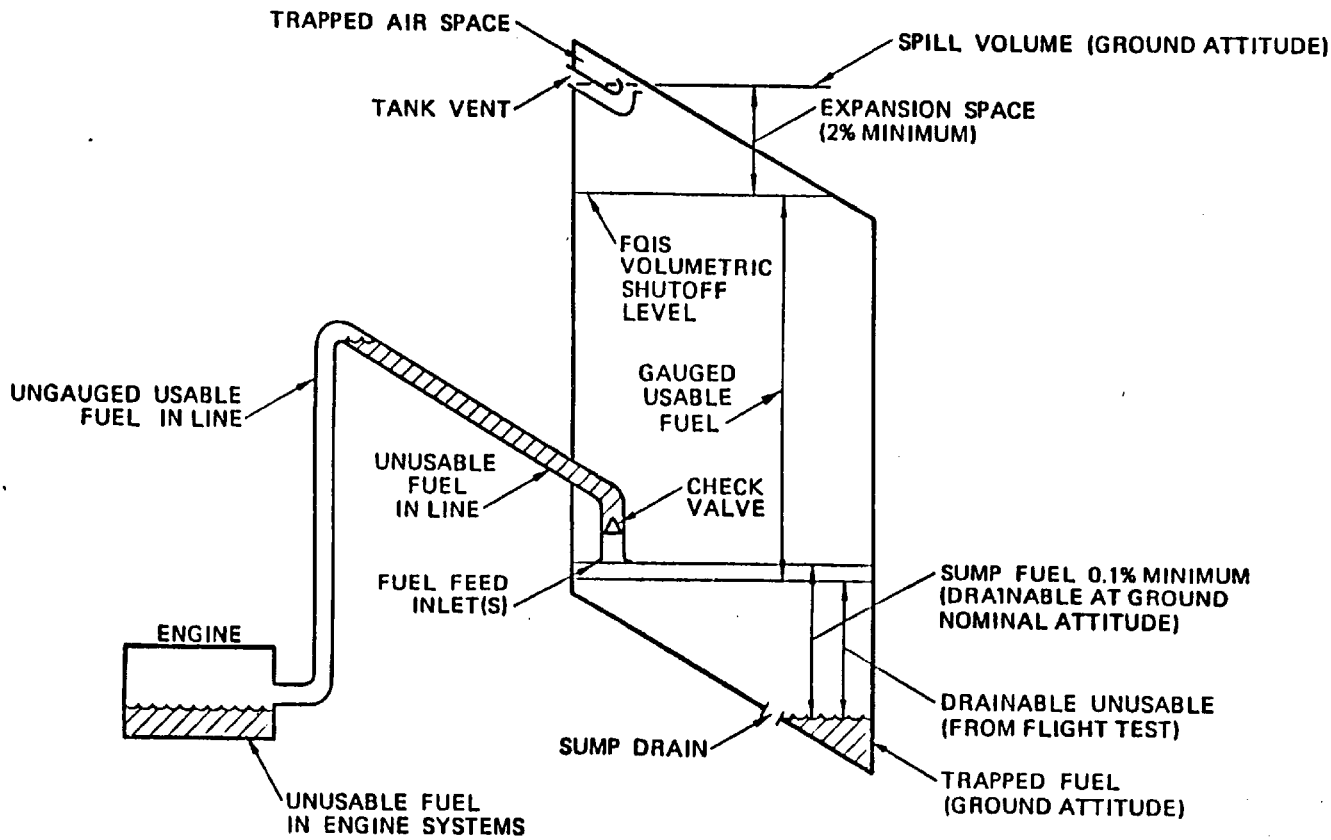

Figure 1-- Fuel Volume/System Definitions

(3) ***Auxiliary Fuel Tank Sump Requirements.*** The following excerpt is taken from an FAA memorandum, dated January 20, 1982, developed during certification of an auxiliary fuel system.

> The proposal was based on the premise that collection of moisture in the auxiliary tank would be minimized because no significant vent airflow would occur. Further, it is held that any moisture that did collect in the auxiliary tank would be transferred to the main tank and recaptured in the sump of the tank. The FAA did not accept this proposal. First, closing the auxiliary tank vent after depletion of the tank might reduce the condensation of moisture in the auxiliary

tank. This would not, however, inhibit the condensation of the moisture that had been entrained in the fuel while in storage. Further, service experience has shown that the fuel transferred to the main tank is not likely to dwell long enough in the main tank for moisture to collect in the sump of that tank. It would, therefore, be necessary for the applicant to conduct thorough testing to demonstrate that any moisture that might collect in the auxiliary tank would, in fact, always be recaptured in the sump of the main tank and not allowed to progress through the fuel system to an engine. In evaluating an applicants test program, it must he recognized that the aircraft utilizing these tanks will not always remain in first line airline service. Fuel could, therefore, remain in the auxiliary tanks for long periods before being consumed.

Even if the applicant were able to show by testing that the installation had merit from a technical standpoint, the installation would not be in literal compliance with § 25.971(a). Section 25.971(a) specifically requires a sump for each fuel tank regardless of whether fuel is transferred to another tank or fed directly to an engine. As a minimum, a finding of equivalency would have to be made under § 21.21. Depending on the details of the fuel system, it might even be necessary for the applicant to petition for an exemption from § 25.971(a). In any event an accessible drain must be provided for each tank, including the auxiliary tank is required.

Sump Drain Test. Sump drains must be shown to drain clear of the airplane following activation on the ground. This requirement is intended to preclude fuel from draining or collecting onto or into any area of the airplane which could result in a hazard. Compliance demonstration should include activation of each drain with the airplane parked at the normal ground attitude, with little or no wind present. Each tank drain should be activated until all water has been drained from the tank and fuel is flowing. No fuel should impinge or attach to any portion of the airplane.

d. **References.**

(1) Civil Air Regulations 4b, December 31, 1953.

(2) Civil Air Regulations 4b, per Amendment 4b-12 (27 FR 2986, March 30, 1962).

(3) Amendment 25-AD (29 FR 18289, December 24, 1964).

(4) FAA Memorandum, dated January 20, 1982.

Section 25.973 Fuel tank filler connection.

a. **Rule Text.**

Each fuel tank filler connection must prevent the entrance of fuel into any part of the airplane other than the tank itself. In addition-

(a) [Reserved]

(b) Each recessed filler connection that can retain any appreciable quantity of fuel must have a drain that discharges clear of each part of the airplane;

(c) Each filler cap must provide a fuel-tight seal; and

(d) Each fuel filling point, except pressure fueling connection points, must have a provision for electrically bonding the airplane to ground fueling equipment.

(Doc. No. 5066, 29 FR 18291, Dec. 24, 1964, as amended by Amdt. 25-40, 42 FR 15043, March 17, 1977; Amdt. 25-72, 55 FR 29785, Jul 20, 1990)

b. **Intent of Rule.** The intent of this rule is self-evident**.**

c. **Background.**

(1) Subparagraphs (a), (b), and (c) of this rule originated from Section 425 of the Civil Air Regulations (CAR) 4b, December 31, 1953. Amendment 25-AD (29 FR 18289, December 24, 1964) added Part 25 [New] to the Federal Aviation Regulations and replaced Part 4b of the CAR. It was part of the Agency recodification program announced in Draft Release 61-25, published in the Federal Register on November 15, 1961 (26 FR 10698). Part 25 [New] was published as a notice of proposed rulemaking in the Federal Register on June 2, 1964 (29 FR 7169), and given further distribution as Notice No. 64-28. These requirements were recodified from CAR 4b.425 without substantive change.

(2) Notice of Proposed Rulemaking 75-19 (40 FR 21866, May 19, 1975) proposed to add subparagraph (d). The following explanation for the proposal was discussed in the preamble to the Notice:

> To avoid possible static discharge sparks between the fuel dispensing nozzle and the airplane, a bonding point needs to be available adjacent to the filler cap so that the fuel dispensing nozzle can be bonded before the cap is opened.

Amendment 25-40 (42 FR 15034, March 17, 1977) followed Notice 75-19 and adopted the proposal. Disposition of comments within the preamble to Amendment 25-40, was as follows:

The FAA agrees with two commenters who state that, where a metal-to-metal bond is made between the airplane and the fueling equipment, no need exists for separate electrical bonding of the fuel nozzle to the airplane fueling connection. The FAA believes that considering airplane and ground fueling systems being used today metal-to metal contact will exist during pressure refueling. Therefore, the proposals are revised to exempt pressure fueling connection points from the fuel system electrical bonding provision.

Another commenter opposes the proposal on the grounds that there are no statistics to show that the present procedure is unsafe and that requiring special ground connections would increase cost and impose an unnecessary economic burden. The FAA does not concur because the flow rates associated with fueling without proper bonding can induce electrostatic discharge sufficient to ignite fuel vapor."

d. **Policy/Compliance Methods.**

(1) Acceptable methods of compliance, and in certain cases "required compliance methods," include drawing and schematic review together with a compliance (mock-up) inspection and fueling demonstrations. The applicant must supply test proposals which address the conditions that need to be investigated to show compliance with § 25.973.

(2) No dedicated policy material on transport category airplanes is currently available. However, Advisory Circular 29-2B, "Certification of Transport Category Rotorcraft," paragraph 459, section 29.973, provides guidance on transport category rotorcraft, which may also provide insight into possible adaptation for use in transport airplanes, as shown below.

Fuel Tank Filler Connection.

Fuel tank filler connections must be designed so that no fuel can enter into any part of the airplane other than the fuel tank during fueling operations. Spilled fuel must be considered as well as fuel entering the fuel filler port.

A recessed filler connection that can retain appreciable quantities of fuel should have a drain that discharges clear of the airplane.

Section 25.1557(b) prescribes the marking of the filler. (Reference Advisory Circular 20-116, "Marking Aircraft Fuel Filler Openings with Color-Coded Decals," September 17, 1982.)

- The filler cap must be fuel-tight under the pressures expected in normal operation.
- The filler cap or cover must warn if the cap is not fully locked or seated. An improperly locked and seated fuel cap should be evident on the preflight inspections.
- The potential for fuel vapor ignition near the filler cap is of primary concern and should be evaluated. (NASA Publication 1008, "Lightning Protection of Aircraft," and the user's manual to Advisory Circular 20-53A, "Protection of

Aircraft Fuel Systems Against Fuel Vapor Ignition Due to Lightning," provide information.)

Procedure. Compliance with the requirements of this paragraph can normally be demonstrated by analysis and physical inspection of the fuel filler connection design. Testing is not normally required.

d. **References.**

(1) Civil Air Regulations 4b (CAR 4b.425), December 31, 1953.

(2) Amendment 25-AD (29 FR 18289, December 24, 1964).

(3) Amendment 25-40 (42 FR 15043, March 17, 1977).

(4) Amendment 25-72 (55 FR 29785, July 20, 1990).

(5) Advisory Circular 20-53A, "Protection of Aircraft Fuel Systems Against Fuel Vapor Ignition Due to Lightning," April 12, 1985

(6) Advisory Circular 20-116, "Marking Aircraft Fuel Filler Openings with Color-Coded Decals," September 17, 1982.

(7) Advisory Circular 29-2B, "Certification of Transport Category Rotorcraft," July 30, 1997.

(8) NASA Publication 1008, "Lightning Protection of Aircraft."

Section 25.975 Fuel tank vents and carburetor vapor vents.

a. **Rule Text.**

(a) Fuel tank vents. Each fuel tank must be vented from the top part of the expansion space so that venting is effective under any normal flight condition. In addition --

(1) Each vent must be arranged to avoid stoppage by dirt or ice formation;

(2) The vent arrangement must prevent siphoning of fuel during normal operation;

(3) The venting capacity and vent pressure levels must maintain acceptable differences of pressure between the interior and exterior of the tank during --

(i) Normal flight operation;

(ii) Maximum rate of ascent and descent; and

(iii) Refueling and defueling (where applicable).

(4) Airspaces of tanks with interconnected outlets must be interconnected;

(5) There may be no point in any vent line where moisture can accumulate with the airplane in the ground attitude or the level flight attitude, unless drainage is provided; and

(6) No vent or drainage provision may end at any point --

(i) Where the discharge of fuel from the vent outlet would constitute a fire hazard; or

(ii) From which fumes could enter personnel compartments.

(b) Carburetor vapor vents. Each carburetor with vapor elimination connections must have a vent line to lead vapors back to one of the fuel tanks. In addition --

(1) Each vent system must have means to avoid stoppage by ice; and

(2) If there is more than one fuel tank, and it is necessary to use the tanks in a definite sequence, each vapor vent return line must lead back to the fuel tank used for takeoff and landing.

b. **Intent of Rule.** The intent of this rule is to ensure adequate fuel vent performance and to prevent hazardous fuel discharge from vent system under all foreseeable operating conditions.

c. **Background.**

(1) The regulatory history shows that this requirement originated from Section 424 of the Civil Air Regulations (CAR) 4b**,** December 31, 1953. Amendment 25-AD (29 FR 18289, December 24, 1964) added Part 25 [New] to the Federal Aviation Regulations and replaced Part 4b of the CAR. It was part of the Agency recodification program announced in Draft Release 61-25, published in the Federal Register on November 15, 1961 (26 FR 10698). Part 25 [New] was published as a notice of proposed rulemaking in the Federal Register on June 2, 1964 (29 FR 7169), and given further distribution as Notice No. 64-28. This rule was recodified from CAR 4b.424 with no substantive change. It has survived with no substantive changes since that time; however, two proposals have been made to modify it.

(2) Proposal Number 749 of the FAA's 1974-75 Airworthiness Review proposed to revise § 25.975(a) by adding a subparagraph (7) that would require the vent system to be arranged to prevent the loss of more than 5 percent of the fuel tank volume when the airplane is parked and inclined five degrees to the horizontal direction. The justification for the proposal was that loss of fuel was a contributing factor in at least one accident. This proposal was not accepted by members of the committee, however, because it was considered to be too severe.

(3) Notice 847-17A proposed a revision of this section to require installation of flame arrestors in fuel tank vents. That proposal was prompted by recommendations from the Safer Committee, which reviewed worldwide accident data and concluded that several accidents could have been prevented by the installation of flame arrestors with fuel tank vent outlets to preclude fuel tank explosion and to allow increased passenger evacuation time.

d. **Policy/Compliance Methods.**

(1) Acceptable methods of compliance, in certain cases "required compliance methods," include drawing and schematic review together functional demonstrations, ground and flight performance tests and analysis. The applicant must supply system functioning and test proposals which address the fuel system venting arrangements and critical venting conditions to show compliance with § 25.975.

(2) The following excerpt is from Advisory Circular 25-7A, "Flight Test Guide for Certification of Transport Category Airplanes," and provides guidance on fuel tank vent system performance ,as follows.

FUEL TANK VENTS AND CARBURETOR VAPOR VENTS - § 25.975.

a. **Explanation**. Approval of Fuel Tank Vents [§ 25.975(a)].

(1) The tank venting arrangement must prevent siphoning of fuel during normal operation. Also, the venting capacity and vent pressure levels

must maintain acceptable differences of pressure between the interior and exterior of the tank during:

(i) Normal flight operation;

(ii) Maximum rate of ascent and descent; and

(iii) Refueling and defueling.

(2) No vent or drainage provision may end at any point where the discharge of fuel from the vent outlet would constitute a fire hazard, or where the discharge of fumes could enter personnel compartments.

(3) Each carburetor vent system must have means to avoid stoppage by ice.

b. **Procedures**.

(1) Tests should be conducted to ensure that no hazardous quantities of fuel will be siphoned overboard during any likely maneuvers encountered during normal operations. Maneuvers that may require evaluation include, but are not necessarily limited to, the following:

(i) Taxi turns and turning takeoff maneuvers with full fuel tanks;(usually demonstrated by conducting a figure “eight” on the ground followed by a maximum acceleration takeoff. In most cases this maneuver causes fuel to enter both wing surge tanks and will validate that siphoning does not occur and show that any fuel that discharges does not create a hazard)

(ii) Maximum climb power ascent at high climb angles;

(iii) Simulated turbulent air oscillations at or near the natural yawing and pitching frequency of the airplane;

(iv) Rapid descent with high initial pitch-down rate;

(v) In-flight power-up turns; and

(vi) Sideslip maneuvers on approach.

(2) The changes in tank secondary barrier cavity pressure during all airplane maneuvers, including emergency descent, must be accounted for in the design of the fuel tank. Bladder type tanks may be critical under emergency descent conditions, depending on the cavity vent line sizing. The vent/drain configuration must provide the required positive and negative pressure relief between the outer shell and the bladder or inner wall, to prevent collapse or over-expansion of the inner tank. Depending on the location of the overboard vent/drain exit and the airflow characteristics around the exit or exit mast, a flight test may be required to evaluate the ascent and/or emergency descent characteristics of the cavity vent system with the airplane in both the “clean” and “wheels and flaps down” configuration.

(3) Verification that liquid discharge from the vent mast will flow clear of the airplane, not attaching itself to any airplane surface or re-entering any compartment of the airplane, may need to be accomplished by

impingement tests conducted inflight. This can be accomplished using dyed fluid and/or coating the surfaces required to be free of impingement with powder compounds that will be washed away if contacted by liquid. If dyed water or other liquid is used, it may be necessary to add chemicals to prevent freezing during the test. Sufficient test maneuvers should be accomplished to ensure that impingement will not occur during any inadvertent discharge from the venting system.

(4) Carburetor vent systems may require flight testing to ensure against stoppage by freezing. Such tests can be conducted in conjunction with the tests required by § 25.1093 and/or § 25.1101 (see Procedures for those sections in this AC).

(3) The following excerpt is from an FAA Issue Paper that was developed during recent certification projects to provide guidance on the installation of flame arrestors in fuel tank vent lines.

STATEMENT OF ISSUE: The fuel vent outlets of the airplane model do not have flame arrestors. Service experience has shown that during fire conditions following an accident fire may progress up the fuel vent lines and cause a fuel tank explosion. The lack of flame arrestors within the fuel tank vents on the airplane model is considered an unsafe feature.

BACKGROUND: Studies of airplane accidents conducted by the aviation industry have shown that the loss of life following an impact survivable accident can be reduced by the installation of flame arrestors within the fuel vent lines. Transport category airplane manufacturers have recognized this fact and have installed flame arrestors on new type certificated airplanes. The FAA is currently in the process of amending Part 25 of the Federal Aviation Regulations to require installation of flame arrestors within the fuel vent lines on new type designs, and amending Parts 121, 125, and 135 to require installation of flame arrestors within the fuel vent lines of all aircraft operated under those rules (existing aircraft as well as new type design aircraft). since these proposed amendments to Part 25, 121, 125, and 135 have not been officially published yet, the requirement for flame arrestors in the fuel vent lines will be applied to the airplane model via a Special Condition.

FAA POSITION: The fuel vent lines of the airplane model must be equipped with flame arrestors to preclude an unsafe condition. The flame arrestors must have flame holding capability for a minimum period of 2.5 minutes to allow passenger evacuation following an accident. The flame arrestor installation must also be designed such that either ice will not accumulate during icing conditions or the fuel tank pressures will be maintained within allowable limits by other means when the arrestor installation ices over.

d. **References.**

(1) Civil Air Regulations 4b, December 31, 1953.

(2) Amendment 25-AD (29 FR 18289, December 24, 1964).

(3) Advisory Circular 25-7A, “Flight Test Guide for Certification of Transport Category Airplanes,” June 6, 1995.

Section 25.977 Fuel tank outlet.

a. **Rule Text.**

(a) There must be a fuel strainer for the fuel tank outlet or for the booster pump. This strainer must --

(1) For reciprocating engine powered airplanes, have 8 to 16 meshes per inch; and

(2) For turbine engine powered airplanes, prevent the passage of any object that could restrict fuel flow or damage any fuel system component.

(b) (Reserved)

(c) The clear area of each fuel tank outlet strainer must be at least five times the area of the outlet line.

(d) The diameter of each strainer must be at least that of the fuel tank outlet.

(e) Each finger strainer must be accessible for inspection and cleaning.

(Amdt. 25-11, 32 FR 6913, May 5, 1967, as amended by Amdt. 25-36, 39 FR 35460, Oct. 1, 1974)

b. **Intent of Rule.** The intent of this rule is to ensure ice that forms or debris and ice present in the fuel tanks does not restrict fuel flow or cause damage to any fuel system components.

c. **Background.**

(1) This rule originated from Section 427 of Civil Air Regulations (CAR) 4b, per Amendment 4b-12 (27 FR 2986, March 30, 1962). Amendment 25-AD (29 FR 18289, December 24, 1964) added Part 25 [New] to the Federal Aviation Regulations and replaced Part 4b of the CAR. It was part of the Agency recodification program announced in Draft Release 61-25, published in the Federal Register on November 15, 1961 (26 FR 10698). Part 25 [New] was published as a notice of proposed rulemaking in the Federal Register on June 2, 1964 (29 FR 7169), and given further distribution as Notice No. 64-28. This rule was recodified from CAR 4b.427 without any substantive changes.

(2) Notice of Proposed Rulemaking 65-43 (31 FR 93, January 5, 1966) proposed to revise the requirements for turbine powered airplanes. The preamble to the Notice described the proposed revisions as follows:

> Section 25.977 would be amended to require that fuel tank outlet strainers in turbine fuel systems be fine enough to prevent the passage of any object that could restrict fuel flow or damage fuel system components, and to require that an alternate means be provided in turbine engine powered airplanes to provide uninterrupted fuel flow if the main strainer configuration or mesh size could result in ice accumulation. This proposal would further require that the means for ensuring uninterrupted fuel flow provide a level of fuel system protection to that provided by the main screen. These proposals are considered necessary because of the following characteristics of turbine engine powered airplanes.
>
> - First, those airplanes carry a greater total fuel quantity than reciprocating engine powered airplanes.
> - Second, turbine engine fuels have a greater affinity for water than do aviation gasoline's, so that the potential percentage of water in solution is greater than that for reciprocating engine powered airplanes.
> - Third, the turbine engine powered airplane spends a greater portion of its flight time at freezing altitudes.
>
> For these reasons, the mesh sizes now allowed in § 25.977 may permit screen ice buildups in turbine fuel systems sufficient to cause fuel stoppage.

Amendment 25-11 (32 FR 6906, May 5, 1967) followed Notice 65-43 and adopted the proposal. The following excerpt from the preamble to Amendment 25-11 discusses comments received in response to the Notice:

> The Notice proposed to amendment the fuel tank outlet requirement of § 25.977 to require that:
>
> - fuel tank outlet strainers in turbine fuel systems be fine enough in mesh to prevent the passage of any object that could restrict fuel flow or damage any fuel system component,
> - an alternate means be provided in turbine fuel systems to provide uninterrupted fuel flow if the main strainer could become blocked with ice, and
> - this alternate means provide a level of fuel system component protection equal to that provided by the main strainer.
>
> One commenter states that the requirement that the main strainer prevent the passage of any object that could restrict fuel flow or damage component, if strictly interpreted, would lead to ice blockage of the means to prevent interruption of the fuel flow. The Administrator agrees. However, it is for this reason that the alternate § 25.977(b) was proposed. No change from the Notice is necessary in this regard.
>
> The comment also states that a four-mesh screen of adequate size has been found to provide proper protection for the fuel system from a standpoint of both extraneous material and icing, and states that a four to eight mesh size should be prescribed specifically. The Administrator disagrees. No single mesh size, or single range of mesh sizes, has been shown to be adequate for turbine fuel systems generally.

> Another commenter . . . supports this amendment, but states that the prescribed alternate should not be a screen if another means of showing safety equal to the main strainer is available. This commenter specifically mentions a pump inlet screen bypassing arrangement that might prevent pump damage. The Administrator agrees that the words “equal to” should not be administered to automatically exclude any available means of showing equal protection.
>
> One commenter states that a second strainer is the only available alternative that is equal in safety to the main strainer, that safety would not be advanced by requiring a second strainer wince both strainers could collect ice, that an actual need to protect against foreign matter in the tanks simultaneously with icing is not operationally probable, and that the rule should require a "high degree" of protection rather than protection "equal to" that of the main strainer. The Administrator disagrees. Means other than strainers are not precluded under this amendment if protection equal to the main strainer is shown. The probability of simultaneous icing of an alternate strainer and the main strainer is slight enough to justify use of a strainer as an alternate . The words "high degree" of safety would not be appropriate since protection of the fuel system is best measured relative to the protection provided by the main strainer, which must be acceptable to the Administrator. These comments cannot, therefore, be accepted.

(3) Notice of Proposed Rulemaking 71-12 (36 FR 8383, May 5, 1971) proposed relocating the requirement for ice protection of the present § 25.977(b) to a new section 25.951(c). This proposal was adopted in Amendment 25-36 (39 FR 35452, October 1, 1974). The remainder of the rule was unchanged.

d. **Policy/Compliance Methods.**

(1) Acceptable methods of compliance, and in certain cases “required compliance methods,” include drawing and schematic review together with a compliance (mock-up) inspection and fuel flow tests and demonstrations in accordance with § 25.951 and § 25.955.

(2) Since amendment of this regulation for consideration of turbine engine requirements, fuel system inlet screen icing characteristics have been evaluated by several applicants. Test results presented in an airplane manufacturer’s report indicate that fuel pump inlets configured with inlet screens with a number 4 mesh (4 meshes per inch) have provided adequate protection and have not experienced icing . However, the screen size that is needed to protect the fuel system from debris will be dependent upon fuel system design and must be justified. In addition, § 25.951(d) provides guidance regarding fuel system water/icing requirements.

d. **References.**

(1) Civil Air Regulations 4b, December 31, 1953.

(2) Civil Air Regulations 4b, per Amendment 4b-12 (27 FR 2986, March 30, 1962).

(3) Amendment 25-AD (29 FR 18289, December 24, 1964).

(4) Notice of Proposed Rulemaking 65-43 (31 FR 93, January 5, 1966).

(5) Amendment 25-11 (32 FR 6906, May 5, 1967).

(6) Notice of Proposed Rulemaking 71-12 (36 FR 8383, May 5, 1971).

(7) Amendment 25-36 (39 FR 35452, October 1, 1974).

Section 25.979 Pressure fueling system.

a. **Rule Text.**

For pressure fueling systems, the following apply:

(a) Each pressure fueling system fuel manifold connection must have means to prevent the escape of hazardous quantities of fuel from the system if the fuel entry valve fails.

(b) An automatic shutoff means must be provided to prevent the quantity of fuel in each tank from exceeding the maximum quantity approved for that tank. This means must --

(1) Allow checking for proper shutoff operation before each fueling of the tank; and

(2) Provide indication at each fueling station of failure of the shutoff means to stop the fuel flow at the maximum quantity approved for that tank.

(c) A means must be provided to prevent damage to the fuel system in the event of failure of the automatic shutoff means prescribed in paragraph (b) of this section.

(d) The airplane pressure fueling system (not including fuel tanks and fuel tank vents) must withstand an ultimate load that is 2.0 times the load arising from the maximum pressures, including surge, that is likely to occur during fueling. The maximum surge pressure must be established with any combination of tank valves being either intentionally or inadvertently closed.

(e) The airplane defueling system (not including fuel tanks and fuel tank vents) must withstand an ultimate load that is 2.0 times the load arising from the maximum permissible defueling pressure (positive or negative) at the airplane fueling connection.

(Amdt. 25-11, 32 FR 6913, May 5, 1967, as amended by Amdt. 25-38, 41 FR 55467, Dec. 20, 1976; Amdt. 25-72, 55 FR 29785, Jul 20, 1990)

b. **Intent of Rule.** Pressure fueling system requirements, originally referred to as "under-wing fueling provisions," address three design objectives together with related monitoring and performance provisions that must be included in the design. These are :

- prevention of spillage of hazardous quantities of fuel if the entry valve fails open,
- control fuel quantity at the maximum approved for each tank, and
- prevention of damage to the fuel system under certain fueling conditions.

c. **Background.**

(1) This regulation originated with Notice of Proposed Rulemaking 65-43 (31 FR 93, January 5, 1966), which proposed modification of the requirements for turbine powered airplanes, as follows.

> Section 25.979 (b) now requires that a means, in addition to the normal means for limiting tank content, be installed to prevent tank damage if the normal means fails. The applicability of paragraph (b) to pressure fueling systems, like that of paragraph (a), depends on the nature of the hazard, not on the location of the fuel entry valve. Experience has shown that the hazard of over pressurization can be eliminated by providing alternate fuel pressure relief means capable of handling the greatest fueling rates and pressures for which the fueling system is designed. Section 25.979(b) would be amended accordingly.
>
> One further change would be made to § 25.979 (b). The present requirement to install a "means, in addition to the normal means for limiting the content," was intended to apply a fail-safe concept to the hazard of over pressurization. The "normal means" is the means of preventing inadvertent filling of the fuel and expansion space prescribed in § 25.969. This is generally a fuel shutoff valve. The means "in addition to " the normal means is generally a similar valve designed to function if the first should fail. These valves frequently employ common elements whose failure could cause the malfunction of both valves simultaneously. The fail-safe concept is therefore not being carried out to the extent necessary for safety. To correct this condition, the "normal means for limiting tank content would be required to be designed to allow a check of its proper operation, and the backup means now in § 25.979 (b) would be required to be accomplished either by sizing of the vents to accommodate damaging over pressure or by overflow valve with similar capabilities.

Amendment 25-11 (32 FR 6906, May 5, 1967) followed Notice 65-43 and adopted the proposal. The following excerpt is from the preamble to that Amendment:

> The notice proposed to amend § 25.979:
>
> - to cover all pressure refueling systems,
> - to eliminate a reference to the fuel access cover plate,
> - to more fully describe the means of preventing damaging overpressures, and
> - to require that this means comply under the maximum fueling rates and pressures for which the system is designed.
>
> One commenter objects for the following reasons:
>
> The commenter states that the proposed detailed means of preventing damaging overpressures (that is, providing either proper tank vent sizing or an overflow valve) unduly dictates design. The Administrator agrees. This amendment therefore requires a means to prevent excessive pressures, without further prescribing the method of compliance (§ 25.979(c)).

> The commenter states that the change to cover spillage from the "system" rather than from the "tank" would lead to added complexity without increased safety. The commenter appears to answer its own objection by then stating that highly reliable poppet check valves are commonly available to limit fuel spillage to nonhazardous amounts. No specific degree of complexity is intended or specified in this amendment.
>
> The commenter states that the proposal would preclude spillage of "minor" quantities of fuel from the refueling manifold. This comment is not understood, since the proposal concerns only "hazardous" quantities of spilled fuel.
>
> The commenter states that the prohibition of spillage is inconsistent with the fact that large quantities of fuel may be spilled in order to comply with the proposed pressure relief requirement (proposed § 25.979(b)). The Administrator disagrees. The pressure relief provisions specifically apply only to conditions following failure of the prescribed fuel quantity limiting means. Thus, the fuel spillage resulting from pressure relief is tolerated only as a necessary means of preventing a significantly greater hazard, such as structural damage to the airframe which may not be detected before flight, and is tolerated only as a consequence of pressure relief requirements prescribed as a backup to the fuel quantity limiting means.
>
> The commenter suggests wording that would limit the fuel spillage requirement to "uncontrolled quantities." Since hazardous quantities may or may not be "controlled" in some way, the requested language would not be useful in preventing a hazardous situation and therefore cannot be adopted. This part of the amendment is therefore issued as proposed [25.979(a)].
>
> Section 25.979(b) contains the required automatic shutoff means for limiting tank content that was proposed as part of § 25.969. This means is placed in § 25.979, rather than § 25.969 as proposed, for the reasons covered in the discussion of § 25.969 (see above).

(2) Notice of Proposed Rulemaking 69-33 (34 FR 13036, August 12, 1969) was followed by Amendment 25-32 (37 FR 3964, February 24, 1972), which clarified certain of the requirements of the rule. The following excerpt is from the preamble to Amendment 25-32:.

> One commenter questions whether the design criteria for the pressure fueling components was applicable to fuel tanks, fuel system components, and fuel tank vent components.
>
> [*FAA's response:*] The proposed amendment to § 25.979 was not intended to apply to fuel tanks fuel system components and fuel tank vent system components. Paragraphs (d) and (e) are minimum design requirements for the pressure fueling components and the pressure limiting provisions under failure conditions are addressed in §§ 25.979(c) and 25. 975 (a)(3)(iii). Generally, maximum design burst and proof pressures for fuel system components are greater that a factor of 2.0 times the most critical operating pressures. The section as adopted has been revised to make this clear.

(3) Notice of Proposed Rulemaking 75-10 (40 FR 10802, March 7, 1975) was followed by Amendment 25-38 (41 FR 55454, December 20, 1976), which revised the rule as discussed below:

> Proposal 2-69. One commenter suggests that the language “proof and ultimate factors" in the proposal for new paragraphs (d) and (e) of § 25.979 be revised to be consistent with § 25.301. The FAA agrees that the terminology should be consistent, and the section as adopted is reworded to use the term ultimate load.
>
> One commenter questions whether the design criteria for the pressure fueling system was applicable to fuel tanks and fuel tank vents. [*FAA’s response:*] The proposed amendment to § 25.979 was not intended to apply to fuel tanks and vents. The section as adopted has been revised to make this clear.

(4) Notice of Proposed Rulemaking 84-21 (49 FR 47358, December 3, 1984) was followed by Amendment 25-72 (55 FR 29756, 20, 1990), which revised the rule as discussed below:

> One commenter supports the proposal to clarify the intent of the term "desired level" in § 25.979. Another makes a comment which, although it appears to be beyond the scope of the Notice, may indicate a misunderstanding. Because there seems to be some misunderstanding of the intent of this section, the following clarification is provided:
>
> In order to clarify the intent of the term "desired level" in § 25.979, i.e., that this expansion space is not filled during refueling, each tank must have a corresponding maximum fuel quantity that does not include the expansion space. The purpose of § 25.979(b)(2) is to require a means to alert personnel when this maximum fuel quantity is exceeded so that corrective action may be taken before a hazardous situation develops. Exceeding a chosen intermediate quantity of fuels, as suggested by the commenter, is, therefore, not relevant to this requirement. The FAA has reviewed the comments and has determined that the proposal will eliminate the confusion that currently exists concerning the intent of this rule. Section 25.979 is, therefore, amended as proposed.

d. **Policy/Compliance Methods.**

(1) Accepted methods of compliance, and in certain cases “required compliance methods,” include a system description, drawing and schematic review together with a compliance (mock-up) inspection, stress analysis, failure analysis, ground test functional demonstrations and fueling system performance tests and analysis. Consideration can be given to prior compliance by design similarity and service experience on applicants approved existing component design on other model aircraft. The applicant must supply system and functioning and test proposals which address each system and condition in §§ 25.969; 25.975(a)(3)(iii); and 25.979(a),(b), and (c).

(2) The following excerpt from Advisory Circular 29-2B, Change 1, dated September 30, 1998,provides guidance on the amount of fuel that should be considered a hazardous quantity within § 25.979 (a).

> Designs which have the pressure refueling and fueling provisions below the fuel level in each tank must demonstrate that when there is a malfunction of the fuel entry valve, no hazardous quantity of fuel will be lost. Generally, any amount of fuel loss in excess of 8 ounces is considered to be hazardous. Any amount of

fuel that can come in contact with an ignition source is hazardous and unacceptable. Compliance should be demonstrated by test and supported by a failure mode and effects analysis.

(3) The following excerpt from an FAA memorandum dated April 11, 1967, provides guidance on the determination of compliance of underwing pressure refueling systems. .

Airworthiness Directive 60-13-3, applicable to [a model airplane} without fuel tank pressure relief valves, allows retention of the original pressure refuel shutoff installation, which consists of a primary and secondary float actuated refuel shutoff system with a single refuel shutoff valve. Specific refuel procedures are also required by the AD when only the original refuel system is installed. Prior to issuance of AD 60-13-3, several pressure refuel systems were evaluated and certificated on various other model airplanes.

We are unable to understand the specific question which you have raised in the second paragraph of the referenced memorandum. If you are asking whether or not we would approve the original model airplane pressure refuel system unmodified or with no fuel tank overpressurization protection, the answer is no. The following discussion will completely outline the evaluations conducted by the FAA on the aforementioned refueling systems, and possibly, this will answer all questions which you may have on the subject.

The pressure refuel systems installed in each of the aforementioned manufacturer's airplanes are unique. Essentially, the refuel control and overpressure protection design features evaluated in this region fall into three categories. The following paragraphs identify these three general design categories and include the substantiation requirements established for each, using § 25.979 (CAR 4b.428) and, if applicable, § 25.975 (a)(3)(iii), [CAR 4b.426(a)(3)] as the basis for certification. In each case, the applicant has demonstrated that the critical tank pressure (structural limit load) was not exceeded during pressure refuel operations with failed or malfunctioning airplane and ground fueling systems per FAA test requirements.

REFUEL DESIGN CATEGORY I

Pressure refuel system with a single or dual refuel shutoff valve, single or dual float actuated full tank control of the shutoff valve and utilization of the fuel tank vent system to prevent overpressurization of the fuel tank due to failure of the refuel shutoff valve in the open position. The current test requirements for this type of refuel system specifies, in addition to the refuel shutoff valve failure, a failure of the ground refueling pressure regulation provisions, such that refuel valve inlet pressures are increased by at least 50 percent. This condition must exist prior to and during fuel discharge through the vent system. Also, consideration must be given to the vent system design where simultaneous refuel of the separate tanks is possible, and the tanks involved have a common vent line. In this case, overpressurization of both tanks may occur with the vent line full of fuel from the tank with the failed shutoff valve and thereby unable to relieve air pressure in the tank with the normal operating refuel system. Therefore, simultaneous refueling of certain tank combination will be more critical than other combinations. The most critical must be determined, and the system evaluated under that combination.

An overpressure warning system may be accepted for use to substantiate complete refuel system testing at a lower shutoff valve inlet pressure, that is, normal regulated pressure. In this case, any failure of the ground fueling equipment pressure regulating provisions, together with the failed airplane refuel shutoff valve, will be sensed prior to reaching the critical tank pressure. Such a system must be checkable to determine its condition and performance prior to and during refuel operations and requires constant monitoring by the fueling personnel in order to control the ground fueling system.

REFUEL DESIGN CATEGORY II

Pressure refuel systems with a dual (primary and secondary) refuel shutoff valve and single or dual fuel level control of the primary shutoff valve and internal tank pressure control of the secondary valve. One airplane manufacturer's refuel system incorporates a third shutoff valve which is controlled by the internal tank pressure regulator. The vent system is not sized to prevent overpressurization. Refuel tests are conducted with the primary system (fuel level control) completely failed and all other systems normal. In this case, the tank pressure sensing device is set at such a low value that malfunctions in the ground fueling equipment are not hazardous because the tank pressure control will shut off fuel before the fuel level reaches a critical level. In this design, the fuel expansion space is maintained since the tank vent float in the expansion space must close because the pressure refuel pressure sensing device pressure setting is lower than the fuel tank vent pressure relief valve setting. The pressure sensing device must be checkable and must be checked during refuel operations periodically to assure satisfactory operation. Also, it is essential with this type of "back up" protection to demonstrate the worst configuration of pressure sensing shutoff with the maximum amount of the pressure refueling system overshoot shutoff characteristics to establish that the expansion space is not decreased or that the overshoot quantity does not enter the vent system.

REFUEL DESIGN CATEGORY III

Pressure refuel systems with a single refuel shutoff valve and volumetric (selective fuel quantity) control of the shutoff valve and utilizing the vent system to prevent fuel tank overpressurization. The same discussion presented under the Category I refuel systems is applicable to this design.

We have no specific list of unsatisfactory pressure refuel equipment. Several design deficiencies have been revealed in service on all pressure refuel manufacturer's equipment, but these have subsequently been rectified. The unreliable part of all pressure refuel systems is the airlines or airport ground fueling equipment and personnel.

With regard to overshoot shutoff characteristics, it is essential that the applicant provide data to show that the maximum possible overshoot quantity for the refuel shutoff valve has been defined without any doubts as to repeatability. The location or positioning of the primary shutoff floats, vent valve floats or other tank quantity limit devices must be such that the overshoot quantity does not decrease the expansion space volume or cause fuel to enter the vent system if the vent system is not designed for this condition. Obviously, the overshoot characteristics are not as critical when the vent system is sized to prevent tank overpressurization during pressure refueling since the first indication of refuel shutoff valve failure occurs when fuel is being discharged from the vent system at or above normal refuel rates. We would suspect that the operator would

defuel the airplane following this occurrence and conduct appropriate inspections prior to further operation.

Please be advised that we are making no attempt to define what the critical airplane attitude, environment, or refuel procedures should be. All of these are different for each manufacturer's airplane. We trust the foregoing answers all of your questions and provides the assistance desired relative to pressure refuel system evaluation and certification, and please accept our apology for this belated reply.

(4) ***Compliance with Section 25.979(b)(1):*** The means of compliance with the provisions of this subparagraph has been the topic of much discussion. In several instances applicants have requested findings of equivalency to the regulation. The following discussions are from correspondence relating to requests for findings of equivalent safety to this subparagraph and provides insight into the intent of the regulation.

(a) Request for equivalency for basic type design:

The intent of this amended regulation was to address protection of the airplane from damaging overpressure that might result if the fuel quantity limiting means fails or overpressures are transmitted without failure of the fuel quantity limiting means, such as could occur where air, for instance, in the tank does not escape under an abnormally high fueling source pressure (so that fuel quantity itself does not exceed "approved" limits) and the air than becomes part of the mechanism which overpressures are transmitted to the fuel tank and system. With this philosophy in mind, FAA must determine if the proposed Model X automatic fuel shutoff system does provide an equivalent level of safety to that required by strict interpretation of § 25.979(b).

The description and operation submitted with the letter is not adequate to thoroughly assess the function of the system nor determine the failure modes and consequences. We cannot determine if there are undetectable failures that can contribute to a shutoff failure and subsequent overpressurization.

It is our opinion that a complete check of the system prior to each refueling is the intent of this regulation and intermediate check only of the level sensors is not adequate nor in keeping with the intent of this regulation regardless of the number of failures in the level sensing circuitry that must occur before overfilling takes place.

During the June, 1982, Power Plant Certification Review, the authorities requested that the manufacturer provide information as to the compliance of JAR 25.979(b)(1), "Pressure Fueling System."

The manufacturer believes that the design of the airplane model automatic fuel shutoff system provides compensating means of compliance by exhibiting equivalent safety in this matter.

The operation of the airplane model automatic fuel shutoff system is described below.

Prior to normal pressure refueling of the airplane model aircraft, the Refuel S/O Valve operation is checked by indexing the Left and Right Refuel Level Selector

switches to the “OFF” position before fuel enters the fuel tanks via the single point refueling receptacle. This operation will inhibit flow into the aircraft by cutting off electrical power to the solenoid operated Refuel S/O Valves, verifying their operation. The fuel level sensors are not checked during this operation. However, the airplane model is designed with 3 redundant fuel level sensors at the “midlevel” and 2 redundant fuel level sensors at the “Full” level.

When the Refuel Level Control switch is indexed to the midlevel position, the midlevel optical float switch will terminate power to the Refuel S/O Valve when fuel reaches the midlevel. If the midlevel optical float switch should malfunction, then the full level optical float switch will terminate power to the S/O Valve when fuel reaches the full level. If the full level optical float switch should malfunction, then the overfill mechanical float switch will terminate power to the S/O Valve as well as illuminate the Refuel Panel when fuel reaches the overfill level. Upon illumination of the Full light, the fuel truck operator has 10 seconds to terminate flow into the aircraft, via truck shutoff, before fuel begins to flow out of the vent.

When the Refuel Level Control Switch is indexed to the full position, during refueling, the full level optical float switch is the primary shutoff means with the overfill mechanical float switch as a backup, similar in operation as mentioned above.

In addition, the Refuel Panel is equipped with Left and Right Fuel quantity gauges to monitor fuel flow into the aircraft.

Although the airplane model does not allow for complete checking of proper fuel S/O operation before each fueling of the tanks, it is designed to require a double failure of the fuel level sensor at the FULL level and a triple failure at the MID level before fuel will spill out of the vent. This is in contrast to a typical automatic fuel shut-off, In that although the complete system is checked prior to fueling, a single failure of the level sensor will result in fuel spilling out the vent.

In summary, Refuel S/O valve operation is verified before fuel is introduced into the fuel tanks, fuel level float switches have triple redundancy @ Midlevel and duel redundancy @ Full level, overfill warning Ls provided to alert the truck operator of an overfill condition, and fuel quantity, gauges are provided to constantly monitor fuel tank filling status.

In consideration of the Refuel Level Control system features, the manufacturer believes that equivalent safety has been satisfied with respect to JAR 25.979(b)(1).

(b) The following set of letters discusses features of another type design that was found to provide an equivalent level of safety to § 25.979(b)(1).

The fuel system design information presented in your letter regarding verification of the operation of the refuel shutoff valve (compliance with § 25.979(b)(1) is not sufficient enough to allow us to form a definite answer concerning the model airplane system design. However, several fuel systems have been approved with solenoid actuated shutoff test features along with a fuel tank pressure relief design that is periodically checkable or otherwise fail-safe. Therefore., we agree that the system. you describe would comply with § 25.979(b)(1) if compliance with § 25.979(c) (fuel tank pressure relief) is continually ensured during operation by periodic checks or appropriate design.

Applicant response: Regarding the requirement 25.979 (b) (1) we have attached hereby the schematics of the two float valves actually under consideration for installation on the model airplane. The first one has a solenoid which operates the float arm and will not indicate if the float is still in place during the checking procedure requested under 25.979 (b)(1). The second one has a solenoid which will operate a shut-off valve for the float sump, indicating that both float and pilot valve are operating.

This float valve, whichever is going to be chosen, operates the fuel shut-off valve interrupting the refueling operation. Further more, in order to comply with item (c) of the same requirement, a vent valve is included in the system, which will permit the fuel to be release over board in the event of a failure in the shut-off valve. The opening of the valve is checked at each refueling operation.

FAA response: The FAA concurs that a fuel system either of the solenoid actuated fuel shutoff designs discussed in your letter along with the checkable vent valve, comply with the requirements of paragraphs 25.991(b), and 25/979(b)(1) and (c), respectively.

(c) Equivalent Safety, Amended Type Design. The following excerpt is from an equivalent safety finding for an amended type design regarding the automatic refueling shutoff system check function.

STATEMENT OF ISSUE: 14 CFR 25.979 contains specific pressure fueling system design requirements which apply a fail safe philosophy to the protection of the fuel system from damaging overpressure. One of the elements of that fail safe design philosophy is the requirement for the capability to check the proper operation of the pressure fueling system automatic shutoff function before each fueling of the airplane. The proposed pressure fueling system design allows the checking of most elements of the automatic refueling shutoff system, but does not allow checking of the float switch which initiates the signal to shut off the fuel when the maximum fuel quantity allowed in the tank is reached. The proposed system therefore does not comply with the requirements of § 25.979(b)(1).

BACKGROUND: Section 25.979 provides specific design requirements for pressure fueling systems which are intended to ensure that the airplane has multiple layers of protection against overpressure conditions which could damage the airplane structure or the fuel system. A multiple layer fail safe philosophy is applied to pressure fueling systems because of the potential for damage due to overpressure conditions remaining undiscovered until a significant fuel leak or structural failure occurs.

The primary means of protection against overpressure is the automatic shutoff means required by § 25.979(b). The requirement in § 25.979(b)(1) for the ability to check the automatic shutoff means is intended to ensure that the automatic shutoff means will be available if it is needed. The first backup feature for the automatic shutoff means is the indication of the failure of the shutoff means which is required by § 25.979(b)(2). The indication is intended to warn the person fueling the airplane that the maximum allowable fuel quantity has been exceeded. The second backup feature is the means to prevent damage to the fuel system in the event of a failure of the automatic shutoff means required by § 25.979(c). Section 25.979(c) is usually met by sizing the fuel tank vent system to accommodate the maximum pressure fueling flow rate while maintaining system pressures within limits, or by providing an overboard relief valve which performs the same function.

DISCUSSION: The automatic shutoff means has not changed relative to the previously approved airplane. A float switch set at the maximum allowable fuel level is used to shutoff the flow of fuel into the tanks when the maximum fuel level is reached, satisfying the requirement of § 25.979(b).

The automatic refueling shutoff system check function also has not changed relative to the baseline configuration. When the check function is activated from the fueling panel, the automatic shutoff system is activated via a signal from the fueling panel which simulates the high fuel level signal from the float switch, and the fuel shutoff valve then closes. This check function satisfies the requirement of § 25.979(b)(1) for all parts of the automatic shutoff system except for the float switch.

If the fuel quantity indicating system senses that the fuel level in the tanks exceeds the maximum fuel level, the associated tank quantity indication flashes, providing an indication of the failure of the shutoff means. This feature satisfies the requirement of § 25.979(b)(2).

As required by § 25.979(c), the fuel vent system is designed to maintain fuel tank pressures within the structural design limits in the event that pressure fueling is continued after the maximum fuel level is reached.

FAA POSITION: The model airplane is required by § 25.979(b)(1) to have a means to check for proper automatic refueling shutoff operation before each fueling of the tanks. The proposed pressure fueling system does not comply with that requirement for all parts of the automatic refueling shutoff system. The applicant should either change the proposed design to directly comply with the requirement of § 25.979(b)(1) or substantiate that the proposed design provides a level of safety equivalent to that intended by that section.

APPLICANT'S POSITION: The applicant has requested a finding of equivalent safety to § 25.979(b)(1) for the float switch which is not tested when the automatic shutoff check function is performed. The applicant has based that request on the excellent service experience of the previous model refueling system. Review of the service history shows that there have been no unsafe incidents caused by failure of the float switch to accomplish the automatic shutoff function. The float switch has been in service on all airplane models for many years and has proven high reliability (Mean Time Between Unscheduled Removals rate of approximately 29,000 hours). In addition, the refuel panel indicators at the fueling station will provide an indication of the failure of the float switch to shutoff fueling by flashing the quantity readouts on-off every second when the fuel loaded exceeds the maximum quantity approved for the tank. This design, along with the vent system capability to handle the overflow without damage to the wing, in addition to adequate fueling instructions provided on the refuel panel (see attachment), provides the compensating factors which support an equivalent level of safety.

The applicant proposes that the reliability, fail-safe design of the refueling system, and proven service history on the previous airplane models, demonstrates that an equivalent level of safety for the § 25.979(b)(1) requirement is justified.

FAA CONCLUSION: The applicant has described the proposed automatic refueling shutoff system, the check function for that system, the indication that is provided when that system fails, and the fact that the fuel tank vent system has

been sized to prevent structural damage in the event that the shutoff system fails and pressure fueling is continued. The applicant position statement appears to be citing these design features as items which compensate for the lack of a shutoff check function which tests the entire automatic refueling shutoff system as required by § 25.979(b)(1). These features are already required by other paragraphs of § 25.979, however, and therefore cannot alone be considered as compensation for the required feature which has not been provided in the proposed design.

However, the FAA recognizes that the proposed automatic refueling shutoff system is identical to the system on the previously approved airplane. In addition, the FAA agrees that the float switch has been very reliable in service. A finding of equivalent safety to § 25.979(b)(1) is therefore considered to be warranted based on the following:

a. the requirement of § 25.979(b)(1) is met for all parts of the automatic shutoff system except for the float switch,

b. the proposed float switch has been highly reliable in service on other models, indicating that the existing part design and maintenance procedures are mature, and

c. the indication feature and fail safe features required by other paragraphs of § 25.979 will prevent structural damage and fuel system damage if the automatic refueling shutoff system fails to shut off refueling due to a float switch failure.

d. **References.**

(1) Notice of Proposed Rulemaking 65-43 (31 FR 93, January 5, 1966).

(2) Amendment 25-11 (32 FR 6906, May 5, 1967).

(3) Notice of Proposed Rulemaking 69-33 (34 FR 13036, August 12, 1969).

(4) Amendment 25-32 (37 FR 3964, February 24, 1972).

(5) Notice of Proposed Rulemaking 75-10 (40 FR 10802, March 7, 1975).

(6) Amendment 25-38 (41 FR 55454, December 20, 1976).

(7) Notice of Proposed Rulemaking 84-21 (49 FR 47358, December 3, 1984).

(8) Amendment 25-72 (55 FR 29756, July 20, 1990).

(9) Advisory Circular 29-2B, “Certification of Transport Category Rotorcraft,” July 30, 1997.

Section 25.981 Fuel tank temperature.

a. **Rule Text.**

(a) The highest temperature allowing a safe margin below the lowest expected auto ignition temperature of the fuel in the fuel tanks must be determined.

(b) No temperature at any place inside any fuel tank where fuel ignition is possible may exceed the temperature determined under paragraph (a) of this section. This must be shown under all probable operating, failure, and malfunction conditions of any component whose operation, failure, or malfunction could increase the temperature inside the tank.

(Amdt. 25-11, 32 FR 6913, May 5, 1967)

b. **Intent of Rule.** The intent of this rule is to preclude ignition of fuel tanks due to hot surfaces that may occur during normal operating and failure conditions.

c. **Background.**

(1) This regulation originated in Notice of Proposed Rulemaking 65-43 (31 FR 93, January 5, 1966), which proposed that a new section § 25.1003 be added to establish a maximum temperature inside fuel tanks in order to prevent auto-ignition. The preamble to the Notice explained the proposal as follows:

> For turbine fuels, 400°F appears to be a realistic value giving adequate protection without unnecessarily large margin of safety since their autoignition temperatures are approximately 430°F.
>
> For aviation gasoline, 400°F appears to be a necessary limiting temperature since, although controlled test conditions yield values as high or higher than 800°F., aviation gasoline can have high autoignition temperatures several hundred degrees lower by varying certain test conditions, such as environmental pressure or fuel oxygen content.
>
> This proposal is in response to present practice of installing heat generating or conducting components inside fuel tanks.

Amendment 25-11 (32 FR 6906, May 5, 1967) followed Notice 65-43 and adopted the proposal in part. The preamble to the Amendment contained the following discussion:

> The Notice proposed to add a new § 25.1003, providing that no temperature inside any fuel tank may exceed a specified temperature and requiring that compliance be shown for all normal and abnormal operations of all components that are inside any tank or that could transmit heat to any tank, including all possible malfunctions of those components. This amendment adds a new § 25.981, rather than § 25.1003, since this amendment affects fuel tanks only (rather than fuel systems).

One commenter states that substantiation for all “possible” malfunctions and “combinations of malfunctions” would be unduly difficult. The Administrator agrees. This amendment specifies only “probable conditions.”

The commenter also states that specification of a temperature limit to cover all present and future fuels and conditions is undesirable. The Administrator agrees. This amendment therefore incorporates only “the highest temperature allowing a safe margin below the lowest expected autoignition temperature of the fuel in the tanks.”

Another commenter requests that the proposal be eliminated because future design improvements and fuel requirements would require different maximum fuel temperatures. This amendment meets this objection by requiring prevention of fuel autoignition without prescribing a universal maximum temperature.

d. **Policy/Compliance Methods.**

(1) Acceptable methods of compliance, and in certain cases “required compliance methods,” include a system and component descriptions, drawings and schematic review together with a compliance (mock-up) inspection and failure or fault analysis. Consideration can be given to prior compliance by similarity, and service experience on applicants approved existing fuel tank designs, fuel system components and fuel system designs on other model aircraft. Sections relating to compliance to this paragraph include §§ 25.903(b), 25.954, 25.1301, and 25.1353(a).

Note: *As a result of a transport category accident, this regulation and associated advisory material is currently being reviewed. Applicants should contact the local FAA Aircraft Certification Office regarding the status of any rulemaking that may affect future certification projects.*

(1) Current transport category airplane policy and compliance material for this section has been contained in policy is reflected in Advisory Circular 25.981-1A, “Guidelines for Substantiating Compliance with the Fuel Tank Temperature Requirements,” dated January 20, 1971. However, AC 25.981-1A has been canceled with the issuance of this Propulsion Mega AC and its material has been incorporated in total below:

Advisory Circular 25.981-1A

GUIDELINES FOR SUBSTANTIATING COMPLIANCE WITH THE FUEL TANK TEMPERATURE REQUIREMENTS

1 **PURPOSE.** This advisory circular sets forth some general guidelines for substantiating compliance with fuel tank temperature airworthiness standards, Section 25.981.

2. **CANCELLATION.** Advisory Circular 25.981-1, dated July 23, 1970, is canceled.

3. **BACKGROUND.** Advances in electrical system sealing have made it possible to place electrical fuel system components such as pumps and gauge elements, as well as the wiring to these components, in immersed locations within fuel tanks. Additionally, fuel tank walls may be subjected to local "hot spots" by the proximity of compressor bleed air ducts which carry air at extremely high temperature. The possibility that the temperature of the fuel tank wall internal surface or the fuel system components within the fuel tank could exceed the autogenous ignition temperature of the aircraft fuel has necessitated the establishment of § 25.981.

4. **INFORMATION.** The autoignition temperature of JP-4 as determined by ASTM Test Method D286 is approximately 468° F at one atmosphere of pressure. By this method of testing, under the same atmospheric conditions, the autoignition temperature of kerosene is approximately 449° F; and of gasoline, approximately 800° F. The autoignition temperature of these fuels varies inversely with the ambient pressure. In view of this, factors affecting the pressure in the fuel tank should be taken into consideration when determining compliance.

5. **OBJECTIVES.**

a. Establishment of a Safe Temperature Margin. There is general agreement among industry and the FAA that a temperature providing a safe margin is at least 50° F below the lowest expected autoignition temperature of the fuel.

b. Determining Maximum Component Temperature. Maximum component temperatures may be determined experimentally. Tests should be conducted long enough for the component to reach the maximum temperature. All likely failures and malfunctions of the fuel tank components (including those failures and malfunctions that could be undetected by the aircraft crew) should be considered when determining maximum temperatures. The electrical power supply need not exceed the rating of the circuit protection device. The following list, although it does not include all possible failure modes, suggests some conditions that could be explored as applicable:

(1) Normal operation.

(2) Single phase operation of three phase electrical components.

(3) Two phase operation of three phase electrical components.

(4) Dry operation of mechanical components including lack of lubrication.

(5) Wet operation of mechanical components with zero and reduced fluid flow.

(6) Moving mechanisms locked or seized.

(7) Pump impeller slippage.

(8) Failed bearings.

(9) Failed seals.

(10) Electrical defects which generate excessive heat.

(11) Foreign matter ingestion (including parts that come loose from the component itself) which generates excessive heat.

(12) Submerged heat exchangers operating under conditions of maximum heat rejection to the fuel.

c. Determination of Maximum Temperature of Fuel Tank Surface.

(1) Components mounted adjacent to the exterior surface of the fuel tank can create a high localized temperature at the inner surface of the tank. This can be investigated by laboratory tests which duplicate the installation, or by a heat transfer analysis using the maximum potential temperature of the component.

(2) Where electric wires are routed through conduits installed in a fuel tank, high surface temperature can be created by short circuits. A critical electrical wiring condition might be one in which the insulation is cracked, broken, or of low dielectric strength, allowing intermittent or constant arcing to occur without consuming enough power to cause the circuit protection device to open.

(3) When bleed air duct systems are routed near fuel tanks, an investigation could be made to determine the maximum temperature which can occur when failure, as well as normal operation, of the bleed air system causes heating of the fuel tank internal surface.

■■

END OF ADVISORY CIRCULAR 25.981-1A

d. **References.**

(1) Notice of Proposed Rulemaking 65-43 (31 FR 93, January 5, 1966).

(2) Amendment 25-11 (32 FR 6906, May 5, 1967).

(3) Advisory Circular 25.981-1A, “Guidelines for Substantiating Compliance with the Fuel Tank Temperature Requirements,” January 20, 1971 [incorporated in total into this Propulsion Mega AC].

(4) Advisory Circular 25-16, “Electrical Fault and Fire Prevention and Protection,” April 5, 1991.

(5) FAA Transport Airplane Directorate Designee Newsletter, “Electrical Wiring used in Commercial Transport Airplanes,” Edition 15, February 1993.

(6) FAA Regulatory Support Division (AFS-600), Project 414-76a (01603), “Explosion Potential for Electrical Items in Fuel Tanks.”

(7) Radio Technical Commission for Aeronautics (RTCA) Document DO-160B, “Environmental Conditions and Test Procedures for Airborne Equipment,” July 20, 1984.

(8) Military Standards, as listed below

MIL-W-5086 Standard Aircraft Wire, Tinned Strand

TYPE I-	Primary Insulation PVC, Nylon Jacket 221 Degrees F. No Glass Braid Covering
TYPE II -	Same as Type I with Glass Braid
TYPE III -	Same as Type II plus Secondary Insulation

MIL-W-5088 Wiring, Aircraft, Installation of

MIL-W-7139B High Temperature 400 to 500 Degrees F.

TYPE I -	Silvered Strand, Class Cloth Covering, 400 Degrees F.
TYPE II -	Nickeled Strand, Same as Type I Plus Teflon or (Fluoropolymer) Impregnation 500 Degrees F.

MIL-W-8777B High Temperature, 400 to 500 Degrees F., Silvered Strand

TYPE I -	Silicone Rubber Primary Insulation and Non-fraying cover of Dacron and glass
TYPE II -	Same as Type I plus Teflon Impregnation

MIL-W-25038B Fire Resistant - Nickeled Strand 650 Degrees F. Ambient, 2000 Degrees F. for five minutes in vibration per BUEWPS Qualitation Tests MIL-STD-454, MIL-STD-810, MIL-STD-882

MIL-E-5272A - Environmental Testing of Aeronautical & Associated Equipment (Explosion Proof Equipment Qualification Tests)

MIL-S-8516 Sealing Compound, Synthetic Rubber, Electrical Connectors and Electric Systems, (Accelerator Required)

MIL-S-23586 Sealing Compound, Electrical, Synthetic Rubber, (Accelerator required)