Federal Aviation Administration

Memorandum

Date: March 18, 2013

To: Manager, Small Airplane Directorate, ACE-100

From: Acting Manager, Project Support Branch, ACE-112

Prepared by: Doug Rudolph, Aerospace Engineer, Project Support Branch, ACE-112

Subject: Equivalent Level of Safety (ELOS) Finding to HAFEI Aviation Industry Co., Ltd. (HAIC) Y12F, to the Provisions of 14 CFR, part 23, § 23.1353(h)

ELOS Memo#: ACE-13-07

Regulatory Ref: 14 CFR, part 21, § 21.21(b)(1), 14 CFR, part 23, § 23.1353(h) at Amendment 23-49, effective date 3/11/96.

This memorandum requests your office to review and provide concurrence with the proposed finding of Equivalent Level of Safety (ELOS) for the HAFEI Y12F airplane for the requirements of 14 CFR, part 23, § 23.1353(h) Storage Battery Design and Installation, in the event of a complete loss of the primary electrical generating system.

Background

Airplane overview:

The HAFEI Y12F is a non-pressurized, twin-engine turbopropeller, 14 CFR part 23 commuter category airplane. The airplane is designed for two crew and a maximum of 19 passengers with a maximum takeoff weight of 8,400 kg (18,519 lbs.). The Y12F is powered by two wing mounted Pratt & Whitney Canada PT6A-65B engines with five bladed Hartzell HC-B5MP-3/M10876AN (K)(S) propellers.

The aircraft is predominantly metallic construction. Composite materials are used for the ailerons, rudder, elevator, cowlings, and doors. The Y12F is a conventionally configured high wing monoplane with a single vertical fin and retractable tricycle landing gear. The aircraft is multi-piloted and equipped with the Honeywell Primus Apex™ electronic flight instrument system (EFIS).

Per HAFEI, the Y12F electrical system design has the storage battery being used as starter power and emergency power of the Y12F airplane. Per this design, the Y12F must use the same battery which is used for engine starting to meet the 30-minute requirement. Because of this design, HAFEI is requesting an ELOS as described below from AC 23-17B.

This guidance as it relates to this ELOS is summarized below:

AC 23-17B - Systems and Equipment Guide for Certification of Part 23 Airplanes.

§ 23.1353 Storage Battery Design and Installation.

Paragraph -3

Per previous guidance on this issue, the airplane's primary electrical power includes the airplane's electrical generation system and the airplane's starter battery, when only one battery is installed.

The battery for the 30-minute criteria, therefore, should be an independent power source from the airplane's starter battery. <u>If adequate monitoring and procedures are incorporated so the pilot knows that the airplane's starter battery meets the 30-minute criteria after an engine start and during all other operations, an ELOS finding may be an acceptable method for using the airplane's starter battery.</u>

Paragraph -8

Tests and analyses should be considered for determining the rated operating capacity of the battery, the normal service life, and the continued airworthiness requirement of 14 CFR 23.1529. For these tests and analyses, the following should be established:

For the operating capacity: the discharge rate, temperature, end-point voltage, etc.; and

For the airworthiness requirement: the inspection schedule, useful battery life, end-of-life, etc.

Applicable Regulations

14 CFR, part 21, § 21.21(b)(1)
14 CFR, part 23, § 23.1353(h)

Regulations Requiring an ELOS

14 CFR, part 23, § 23.1353(h) states:

In the event of a complete loss of the primary electrical power generating system, the battery must be capable of providing at least 30 minutes of electrical power to those loads that are essential to continued safe flight and landing. The 30 minute time period includes the time needed for the pilots to recognize the loss of generated power and take appropriate load shedding action.

Description of Compensating Design Features

I. There are two batteries on a Y12F airplane. One battery is used for starting the engine and supplying to the essential load in emergency. The other battery only supplies to the stand-by attitude indicator. It cannot be used for starting the engine or supplying to other loads. There is no connection between the two batteries.

II. In the airplane flight manual (AFM), there will be the procedure to determine that the state of charge of the starter battery is adequate to provide at least 30 minutes of electrical power for systems and equipment needed for continued safe flight and landing. In the AFM Section 4.9, Check Before Flight, "Before flight, the flight crew should monitor the airplane battery capacity displayed on a status page." The AFM provides the battery charge threshold that meets the 30-minute requirement, including consideration of battery discharge due to engine startup (i.e., maximum 3 attempts allowed).

AFM 4.5.3 ENGINE START, there is a notice that says: if start voltage is below 18V, start must be stopped.
During flight, if the generators are in operation, the battery will be charged; and if one generator is in operation, the battery will be charged too. Only when both of the generators fail, the battery will be discharged. The battery is designed as prescribed in § 23.1353. The normal maintenance will ensure that the battery is fully charged.

The voltage and current of the battery are shown in the Integrated System Message Window below:

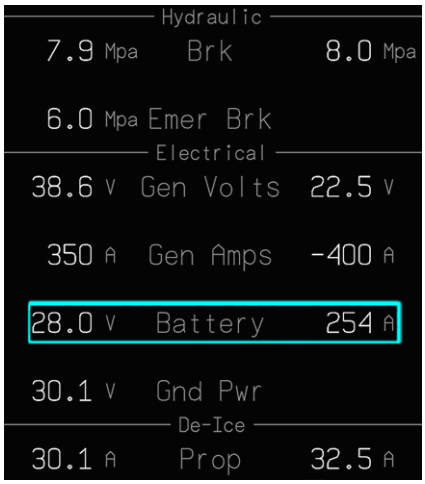

III. The messages below will be shown in the instructions for continued airworthiness (ICA) {including CMM, AMM and MPD etc.}:

- Short Cycle Maintenance time interval of the battery is three months. In Short Cycle Maintenance, the maintenance staff should discharge the battery with 10A discharge current till the voltage of the battery is reduced to 20V; clean the dust on the battery and the metal salt on the body case of the battery; check the whole battery and the cells; dismount the air lock, check and clean according to "Air Lock Check" and "Clean Of Air Lock"; check the insulation resistance of the battery; mount the nut (force moment 14 N·m±1 N·m); charge the battery according to "Constant-current Charge"; two hours after charging, discharge the battery with 50A discharge current till the voltage of the battery reduced to 20V; if the capacity of the battery meets the specification, charge the battery according to "Constant-current Charge", then adjust the electrolyte level according to "Level Adjustment".

- Long Cycle Maintenance time interval of the battery is one year. In Long Cycle Maintenance, the maintenance staff should discharge the battery with 10A discharge current till the voltage of the battery reduced to 20V; change the air lock and check the new air lock according to "Air Lock Check"; dismount, clean, check and mount the battery; check the temperature switch; concoct and change the electrolyte; check the insulation resistance of the battery; mount the nut (force moment 14 N·m±1 N·m); balance the capacity according to "capacity balance"; charge the battery according to "Constant-current Charge"; two hours after charging, discharge the battery by 50A discharge current till the voltage of the battery reduced to 20V; if the capacity of the battery meets the specification, charge the battery according to "Constant-current Charge", then adjust the electrolyte level according to "Level Adjustment".

- The useful battery life is three years.

IV. Testing and Analysis:

- Battery capacity test: after the battery is fully charged, start one engine three times by the battery. There is a two minutes' interval among starts. After starting three times, discharge the battery with a 53.23A current in lab till the voltage of battery drop to 20V. Record the time that the battery is discharged.

- If there is a short circuit on the feeder of the battery or the bus bar PP1, sensing relay (T1 and T2), will get the signal and cut off the coil of contactor K3 and K4. The fuse on the negative pole of the battery will be blown, and the battery will be separated automatically. See the electrical diagram below:

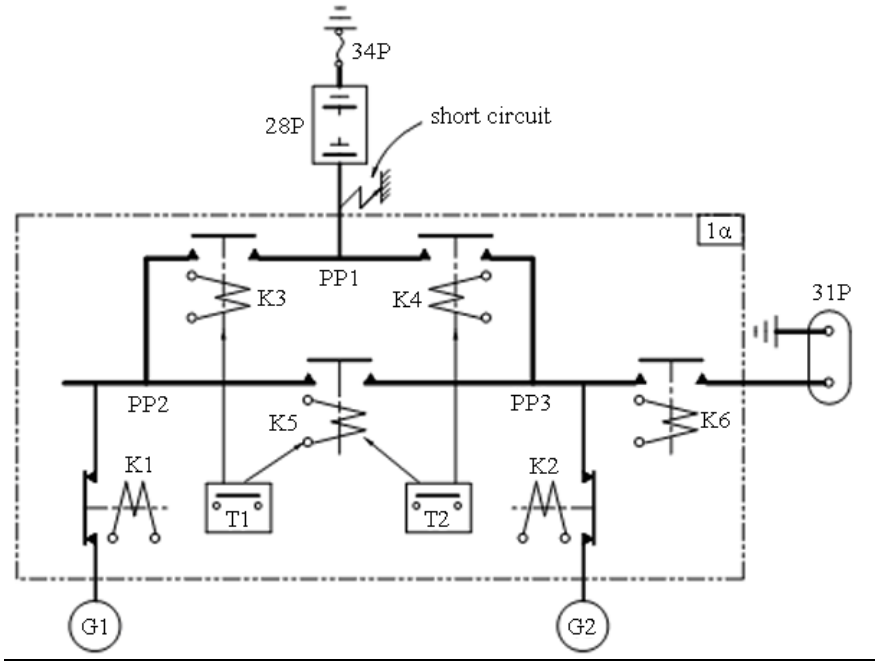

Mean current of airplane under emergency status is:

I=（T1×I1+T2×I2+T3×I3）/30

T1 is 5 seconds

T2 is 5 minutes subtracting previous 5 seconds

T3 is the time remained, i.e., 30 minutes subtracting previous 5 minutes

I1 is the mean current in 5 seconds

I2 is the mean current in 5 minutes

I3 is the mean current in long term

Substitute the data of load analysis into above formula, obtaining:

$$I = (5/60\times108.87+290/60\times50.11+25\times39.45)/30 = 41.39A$$

In light of airworthiness regulation requirement, when calculating battery power supplying time, give consideration to reduction of actual useful capacity due to aging of battery, therefore, battery capacity should be multiplied by a coefficient of 80 %, then considering 9 Ah consumption for three times starting in the air (in Flight Manual, there is a limitation that the starter generator can start the engine three times continually), and from this obtaining emergency discharge time of battery is:

$$T=\frac{50\times80\%-9}{41.39}\times60=44.94(\text{min.})$$

Conclusion: Under emergency power supply conditions, battery capacity can satisfy the requirement of emergency power supply time not less than 30 minutes in airworthiness regulation.

HAFEI will show that the battery discharging with this current complies with § 23.1353 with the ground power supply test.

When two generators fail, the APEX system will indicate “BATT Discharged”, “L Generator Off” and “R Generator Off.” So the pilot can get the information, and cut down all the loads except the essential loads.

The information of the power supply system in ADAU is shown below:

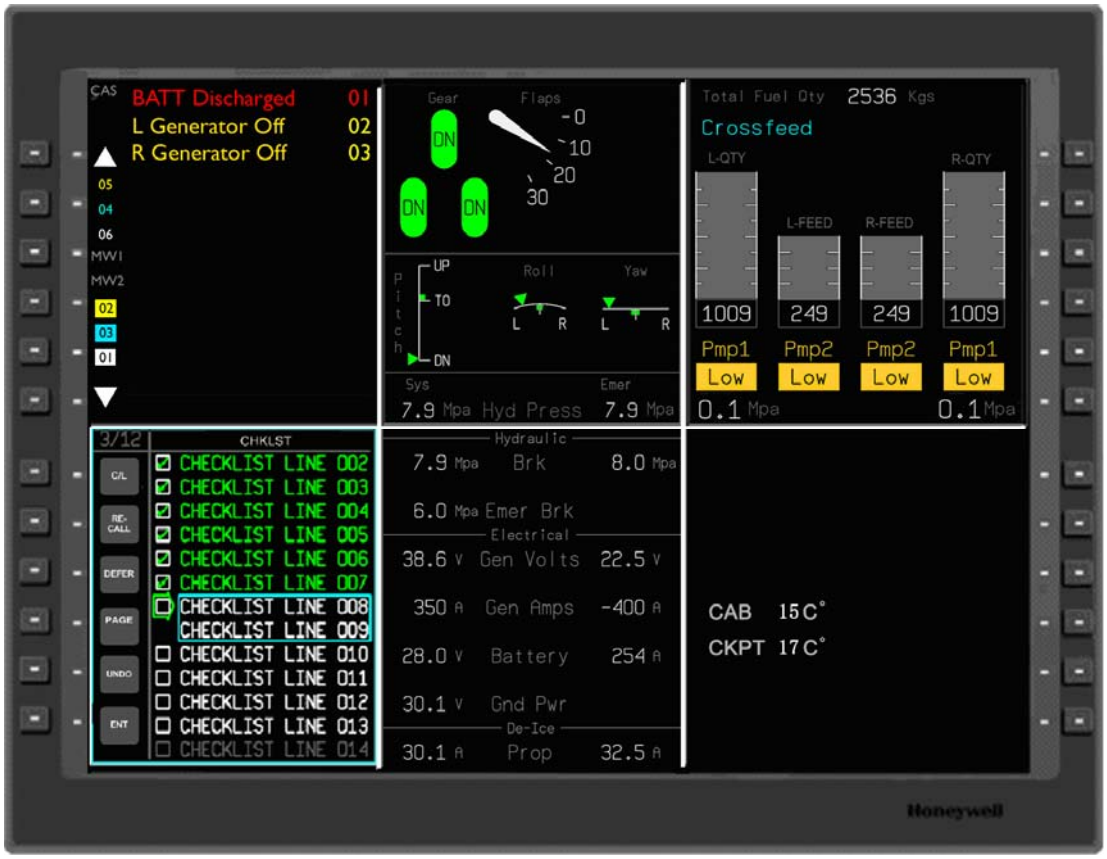

Flight Manual will show the procedure the pilot should do in this emergency.

In the CMM of battery 20GNC50-(3), the “Constant-current Charge” method is used to keep the capacity of the battery more than 80% (main charging at 0.1 C_1A for 10 h -12 h, at 0.5 C_1A for 2 h -2 h 30 min or at 1 C_1A for 1 h -1 h 15 min, final charging at 0.1 C_1A for 4 h).

The stand-by attitude indicator will not use the battery of the electrical generating system. It will be supplied by an independent battery with the failure of the aircraft electrical generating system.

Explanation of Compensating Design Features

As explained above, the battery has the capacity to meet the required 30 minutes emergency power in flight after three failed start attempts. The pre-flight check procedures and battery

charge state thresholds are included in the AFM to facilitate the pilot in monitoring the battery capacity displayed on a status page. The ICAs will include the handling of this battery for maintenance and prescribe the required battery life inspection.

The Civil Aviation Administration of China (CAAC) agrees with HAFEI that this design meets the requirement of an ELOS and this is documented in FAA Issue Paper S-4 Stage 4.

FAA Approval of the ELOS Finding

The Small Airplane Directorate concurs with the requested ELOS for the HAFEI Y12F Model airplane finding to 14 CFR, part 23, § 1353(h), at Amendment 23-49.

Earl Lawrence	*3-18-2013*
Manager, Small Airplane Directorate, Aircraft Certification Service	Date

ELOS Originated by ACE-112	Acting Manager, Project Support, William Schinstock	Routing Symbol: ACE-112

K: \data\ACE112\DRUDOLPH\Y12F project\Y-12F ELOS memos\ACE-13-07 Y12F ELOS for backup battery\ACE-13-07 draft y12f backup battery 23-1353h ELOS R1.doc

K:\ACE110\masterdoc\issued\8110.1.a(3)-64-10 & 8040.0x\draft dated 11-1-12 Y12F backup battery 23-1353h ELOS for CAAC and HAFEI Rev 1 after CAAC agreement.doc\dlr:tjl: