NOTE: This amendment contains TSO-C74a

Advance Copy

Title 14—AERONAUTICS AND SPACE

Chapter I—Federal Aviation Agency

[Docket No. 7270; Amdt. No. 37-10]

PART 37—TECHNICAL STANDARD ORDER AUTHORIZATIONS

Airborne ATC Transponder Equipment, TSO-C74a

The purpose of this amendment to Part 37 of the Federal Aviation Regulations is to revise technical standard order (TSO-C74) for airborne ATC transponder equipment to increase the number of available reply codes and to add on automatic altitude reporting capability. In addition to revising the various technical aspects of the present TSO-C74, this amendment incorporates Federal Aviation Agency Standards and Test Procedures. This action was published as a notice of proposed rule making (31 F.R. 5570, Apr. 8, 1966), and circulated as Notice 66-12.

Transponder equipment comprises only one element of the complete system required for automatic altitude reporting. By separate rule-making action, the Agency is also establishing minimum performance standards (TSO-C88) for 100-foot increment digitizing equipment.

As stated in Notice 66-12, the Datex Corp., Monrovia, Calif., owns U.S. Patent No. 3,165,731 issued January 12, 1965, in the name of Carl P. Spaulding, and claims it covers digitizer equipment employing the parallel digital code set forth in the International (ICAO) Code for SSR Pressure Altitude Transmission (ICAO International Standards and Recommended Practices; Aeronautical Telecommunications, Annex 10, Volume I, Part I, Equipment and Systems).

The FAA takes no position on whether the patent (1) is valid or (2) covers the ICAO Code so that use of the code might infringe the patent. However, in order to assure that the equipment covered by the TSO will be readily available at reasonable cost, the FAA has obtained an agreement from the patent owner providing for the granting of nonexclusive licenses on reasonable terms for the manufacture, use, or sale of the equipment claimed to be covered by the patent.

Numerous comments have been received in response to Notice 66-12. The more pertinent of these comments, together with the changes in the proposal resulting therefrom, are discussed in detail hereinafter.

Several comments were received concerning the applicability of this TSO. In one case, the comment was made that the requirements of this TSO are applicable only to airline users since they are required, for all practical purposes, to carry TSO equipment. In this connection, it was pointed out that in a cooperative system, such as secondary surveillance radar, the FAA should require anyone who carries an ATC transponder to meet a minimum performance standard. On the other hand, certain of the comments objected to the deletion of the phrase "for air carrier aircraft" from the applicability statement and expressed a need for clarification of this action. Concern was expressed that the deletion of this phrase would make the TSO applicable to all transponders in the absence

(As published in the Federal Register /32 F.R. 188/ on January 10, 1967)

1724 [1238]

of any other known means of obtaining transponder equipment approval. The comments point out that the application of a rigid TSO would, in their opinion, impede the development of low-cost equipment and greatly retard the full utilization of the secondary surveillance radar system. It was suggested that if requirements are to be imposed on general aviation aircraft, they should be limited to those absolute minimum systems characteristics which could degrade the system.

In response to these comments, the Agency considers it appropriate to once again point out that the performance standards set forth in this TSO are mandatory only for equipment manufacturers who wish to obtain TSO authorization covering ATC transponder equipment. As the preamble to Notice 66-12 indicated, TSO's are directions to manufacturers holding authorizations under the system and are not directed to persons who install or use the equipment. Therefore, reference to "air carrier aircraft" in the applicability provision of the TSO would be both meaningless and confusing.

The technical standard order system merely provides one means by which equipment is approved and unless the operating rules require that equipment be TSO-approved, an operator may use any approved equipment. At the present time, TSO approval of a transponder is not necessary in order to obtain approval for the installation of the transponder and such installation may be made, notwithstanding the adoption of this TSO, without necessarily meeting the TSO performance standards. However, as the Agency indicated in Advance Notice 65-9 (Airborne Radio Navigation and Communication Equipment for General Aviation Aircraft, and Related Considerations) all transponder equipment must be capable of meeting a minimum level of performance (although not necessarily those in this TSO) if airborne equipment interference is to be avoided and safe passage of an aircraft in the National Airspace System is to be realized. In this connection, the Agency proposed, among other things, the development of "essential system characteristics" and "minimum performance standards" for ATC transponder equipment providing an automatic altitude reporting capability. Essential system characteristics, as outlined in the Notice, are those the equipment must have if its operation is not to impair the use of the airspace environment by others, nor create a hazard. Minimum performance standards are those the equipment must meet to insure acceptable accuracy for IFR operations in controlled airspace. These characteristics and standards are still under development by the Agency and the matters raised by the subject comments will be considered in developing the necessary standards and characteristics. When completed, they will be the subject of a separate notice of proposed rule-making action. The present TSO action is in no way indicative of the course of action that the Agency may take in future rule making under Notice 65-9.

In addition to the foregoing, a comment was received suggesting that a requirement for automatic altitude reporting capability should not be provided in the TSO, but that the provision for such capability should be optional at this time. In further support of this position, the comment pointed out that general aviation transponders which may not have altitude reporting capability must be required to meet minimum performance standard for the basic transponder system. Finally, it was suggested that since Mode C is not mandatory, a TSO requirement for Mode C could discourage general aviation users from meeting any standard. The Agency agrees that to prevent derogation of the system, certain basic transponder standards should be made mandatory for all users of the airspace involved. This is the subject of separate rule-making action under Advance Notice 65-9. However, we do not believe that the absence of a Mode C capability option in this revised TSO would discourage general aviation operators from meeting any standards. Under the current rule, operators may use transponders that do not meet any TSO requirements and while this may lead to the use of transponders that do derogate the system, allowing the Mode 3/A or Mode 3/A and Mode C option in this revised TSO as recommended, would not alter this situation materially. Rule making along the lines proposed in Notice 65-9 is the positive way to obtain compliance with essential system characteristics and thereby prevent system derogation.

Concerning the deletion of detailed test procedures as proposed in Notice 66-12, one comment voiced an objection on the grounds that a determination of the performance characteristics of a transponder depend on the method by which it is tested. While the Agency agrees that different levels of performance may be obtained depending on the techniques and test equipment used, this situation is not unique with respect to transponders. Moreover, this could occur even though the TSO contained standard test procedures.

There are many other areas where detail guidance for testing is not provided as part of the standard. As the Notice indicated, the standard is written for equipment manufacturers who certify compliance with the TSO. These manufacturers are considered qualified to test and certify their equipment using test procedures that they develop for this purpose.

A comment was received requesting clarification of the Agency's plans to utilize Mode D. Although technical parameters have been defined and agreed to internationally in ICAO for Mode D type of operations, no specific use has been assigned for Mode D operation and the Agency has no plans to use it. Mode D is incorporated into the TSO for information only.

As proposed, the TSO contained a section entitled "Rating of Components" which was included because it was thought that requirements for the rating of components would improve the reliability of equipment manufactured under the standard. However, there were objections to this section on the grounds that it is obsolete and may impose an unnecessary burden on the manufacturer. After further consideration, the Agency agrees that a requirement for the rating of components of a transponder is unnecessary and could impose restrictions on equipment design. It has therefore been deleted from the final rule.

In response to industry comments and for the purpose of clarification, the word "transmitter" has been removed from the requirement of paragraph 1.3(a) since the reply codes are not generated in the transmitter itself.

A suggestion was made that the requirement concerning operating controls should require that provision be made for the selection of Mode 3/A or Mode B, if Mode B is provided in the transponder. The Agency does not agree with this suggestion. The purpose of the requirement concerning operating controls is to prescribe functions which must be selectable, as a minimum. Mode B is an optional Mode (as is Mode D). It is necessary only for ATC transponder equipment installed in aircraft which operate in the United Kingdom. The pulse spacing for Mode B operation is contained in an appendix to the standard. The Agency sees no need to include such optional modes of operation in the minimum standards for transponders.

A comment was received concerning the proposed requirement that the variation of sensitivity of the receiver between any mode which it is capable of operating must be less than 1 db. It was pointed out that this requirement is too restrictive to accommodate the variation expected during temperature testing and it was recommended that the allowable variation be changed to 2 db. The Agency considers that a maximum variation of receiver sensitivity between modes of 2 db is excessive when the equipment is operating at normal room temperature. However, since it appears that the requirement would be difficult to meet over all of the temperature extremes which may be encountered in service, the Agency considers it appropriate to provide some relaxation in the standard. In this connection, the standard already provides an allowance in the receiver sensitivity requirement for minimum triggering level outside the temperature range of −15° C. and +40° C. It would, therefore, be consistent to allow a relaxation for the maximum variation of receiver sensitivity between modes when operating beyond these temperature extremes. The proposal has been changed to provide that during temperature testing the 2 db variation is allowed at temperatures below −15° C. and above +40° C.

In a comment objecting to the proposed requirement for repeated testing for spurious responses after each phase of environmental testing, it was pointed out that these tests are over and above

the testing done at normal room temperature and it was recommended that the requirement be deleted. The Agency agrees that if equipment is properly designed and meets the spurious response standard under normal room temperature operating conditions, the proposed testing of the spurious responses under the environmental temperature extremes is unnecessary. The proposal has been revised accordingly.

As proposed, the standard requires only Modes 3/A and C. A comment was received to the effect that since U.S. aircraft operating in international service are required to be capable of responding to interrogations on Mode B, the TSO should at least mention this requirement. The Agency sees merit in this recommendation and an appropriate note has been added to paragraph 2.4, *Interrogation*.

The proposal concerning side-lobe suppression (paragraph 2.5) would have continued in effect the current standards by requiring that all transponder equipment provide three pulse side-lobe suppression (SLS) and by providing for the incorporation of two pulse SLS capability in addition to three pulse SLS at the manufacturer's option. The provision concerning two pulse SLS would have been retained on the assumption that there would be an international need for two pulse side-lobe suppression capability in a transponder. Subsequent to the issuance of the Notice, however, the Communications/Operations Division of the International Civil Aviation Organization (ICAO) agreed, with the support of the U.S. delegation, to discontinue the use of two pulse SLS and to remove provisions relating to two pulse SLS from the international standard. Since the need for two pulse SLS capability did not materialize as anticipated, there is no longer any necessity for a provision in this TSO relating to two pulse SLS. For this reason and consistent with the action being taken with respect to the ICAO standards, reference to two pulse side-lobe suppression has been deleted from the standard. This change imposes no additional burden on any person and manufacturers will still be required to meet only the standards applicable to three pulse side-lobe suppression as proposed. However, with the deletion of the provision for two pulse side-lobe suppression, there is no longer any need to specifically identify suppression capability in terms of the number of pulses. Therefore, the standard now merely refers to "side-lobe suppression."

In addition, as proposed, the requirement of section 2.6(a)(2) would have applied only in equipment designed to operate with two pulse SLS. However, this was an inadvertent change from the current requirements and would have imposed an undue burden on manufacturers. Therefore, the final standard has not been changed as proposed and the regulation is the same as the current requirement.

A comment pointed out that in the proposed standard, side-lobe suppression decoding is permissible out to 3 microseconds, which allows military Mode 1 interrogations to generate suppression within the transponder. This causes unwanted dead time on the transponder, reducing its capability to reply to valid interrogations on other modes. It was suggested that a reduction in the outer limit to +0.7 microsecond should eliminate this possibility. The Agency agrees that a reduction in the outer limits to +0.7 microsecond would reduce the amount of dead time in the transponder and would provide improved operations. The standard has been changed to accommodate the suggested reduction.

As proposed, paragraph 2.6c of the standard provides, in pertinent part, that the transponder must be suppressed with 99 percent efficiency over the received signal amplitude range from minimum triggering level to 50 db above that level. A comment was received to the effect that the transponder must be suppressed with 99 percent efficiency not only from the minimum triggering level to 50 db but also below that level. The Agency agrees that such a requirement would reduce the probability that the transponder would respond to a false signal and create a false target. However, compliance with such a requirement would be more difficult to achieve and would impose an additional burden on the manufacturer. Service experience has shown that the present requirement will achieve a satisfactory level of performance and is considered adequate by the Agency.

In answer to a question concerning the intent of the proposed standard with respect to increased dead time, it should be made clear that the proposed requirement concerning dead time is a clarification of the present requirement and was established to accommodate military users on the emergency reply. The proposed revision permits an increase in dead time over that permitted under the current TSO for this application.

A comment was made that delay variations between modes on which the transponder is capable of replying of less than or equal to 0.2 microsecond is too restrictive to accommodate the variation expected during variations in temperature. It was recommended that this be changed to 0.4 microsecond during temperature testing. The Agency considers that maximum delay variations of 0.4 microsecond between modes on which the transponder is capable of replying are excessive when the equipment is operating at normal room temperature. However, since it appears that the proposed requirement would be difficult to meet over all of the temperature extremes which may be encountered in service, the Agency considers it appropriate to provide some relaxation in the requirement. In this connection, the standard already provides an allowance in the receiver sensitivity requirement for minimum triggering level outside the temperature range of −15° C. and +40° C. It would, therefore, be consistent to allow a relaxation for the maximum delay variation between modes when operating beyond these temperature extremes. The proposal has been changed to provide that during temperature testing the 0.4 microsecond variation is allowed at temperatures below −15° C. and above +40° C.

The requirements of paragraph 2.13b have been changed to make it clear that the pulse spacing is measured leading-edge to leading-edge at the half-voltage points. This method of measurement is consistent with other parts of the standard. With respect to the special position identification pulse (SPI), the proposal provided that when replying to Mode C interrogation, the SPI pulse is included in the reply train whenever the D_4 pulse is selected by the pressure altitude encoder. This provision was originally included in consideration of a possible international need. However, as a result of agreements reached by the Communications/Operations Division of ICAO at a meeting in November 1966, there will be no requirement to transmit the SPI pulse whenever the D_4 pulse is selected by the pressure altitude encoder for automatic altitude reporting in 100-foot increments. Therefore, this provision has been deleted from the proposed standard.

Objection was made to the requirements of paragraph 2.13d of the standard, pointing out that it is extremely difficult to meet the pulse rise time limits between 0.05 and 0.1 microsecond. The comment states that essentially all new transponders use grid or cathode pulse transmitters which permit greater use of solid state devices and provide better recovery characteristics for the 1.45-microsecond pulse spacing. These transmitters nominally give rise times of 0.04 and 0.05 microsecond which was previously permitted. The comment further indicates that it can be shown mathematically that the significant portion of the spectrum does not change when the rise time is faster than 0.05 microsecond if the fall time approaches the outer limit. As proposed by the Agency, the intent of the lower limit to pulse rise time and pulse decay (fall) time specified in paragraph 2.13d is to control spurious sideband radiation which could cause serious interference to other electronic equipment in the aircraft or operating nearby. In response to this comment, the Agency considers it appropriate to provide that the rise and decay time (0.05 microsecond) may be less providing the sideband radiation is no greater than that which would be produced theoretically by a trapezoidal wave having the stated rise and decay time.

A comment was received suggesting that instead of requiring the transponder to be capable of transmitting all 11 information pulses, the standard should be revised to specify that this requirement be made a function of the altitude ceiling of the equipment. It was not intended that equipment have a capability of transmitting all 11 information pulses and the Agency concurs in this comment. The proposal has been changed to require that the equipment have the capability of transmitting only those information pulses necessary for operation up to its design maximum altitude.

A comment was received objecting to the requirements of paragraphs 2.15 and 2.16 which refer to probable malfunctions of the monitor and the self-test feature. The comment points out that any malfunction that could possibly occur is a probable malfunction and that it is important to protect against malfunctions that are reasonably probable. The Agency concurs that protection against all probable malfunctions would be unreasonable and exceeds the state of the art. The Agency believes that the phrase "likely to occur" more appropriately expresses the intent of these paragraphs and achieves the objective of the comment. The proposal has been revised accordingly.

With respect to paragraph 2.17 concerning the equipment antenna, a comment noted that the antenna requirement is appropriate only if it may be assumed that any tests required of the antenna are made considering the antenna as an independent component operated on a specified ground plane, since the antenna radiation pattern is entirely dependent on the characteristics of both the antenna and ground plane in combination. The Agency agrees that the antenna radiation pattern is dependent on the performance of both the antenna and ground plane combination used in conducting the tests. Under paragraph 2.17 the antenna is not required to be installed on the aircraft and the manufacturer may select any suitable ground plane which would provide optimum performance for his antenna in conducting these tests. The requirement is reasonable and is not difficult to meet if commonly accepted design practices are followed.

Commenting on the emission of spurious radio frequency energy requirement contained in Appendix A of the FAA document "Environmental Test Procedures for Airborne Electronic Equipment", it was pointed out that as stated in the Appendix, any energy radiating on the selected transmitter frequency ±50 percent of the band of frequencies between adjacent channels is not included in the requirements. In this context, the commentator requests to be advised concerning this band of frequencies for a single channel device such as the transponder and indicates that exclusion of a band of frequencies around the 1090-Mc transmitter frequency is necesssary since it is extremely difficult to contain this energy at the power levels required in the transponder. In response to this comment, it is noted that DME channels are reserved above 1083 Mc and below 1094 Mc to provide protection for the secondary surveillance radar (SSR) system. Based on this protection plan, the next adjacent channel to the ATC transponder transmitter is 1094 Mc. For purposes of meeting the emission of spurious radio frequency energy requirements, the next adjacent channel would be considered 4.0 Mc from the 1090-Mc frequency of the transponder transmitter.

Paragraph 2.11a of the proposal contains the power output requirements for transponders. As stated in that paragraph, the requirement is based on the assumption that there is a transmission line loss of 3 db. Thus, if the transmission line loss exceeds 3 db, the power output must be adjusted accordingly. Since this was not clearly set forth in the proposal, a new subparagraph has been added providing the necessary clarification.

As proposed, the standard required selection of Modes 3/A and/or C. However, the Agency is now aware that the National Airspace System design will not accept transponder Mode C replies unless they are associated with Mode 3/A replies. The proposal has been revised to require selection of Mode 3/A or Modes 3/A and C.

Other changes of an editorial or clarifying nature have been made to the TSO as proposed. They are not substantive and do not impose any additional burden on regulated persons.

Interested persons have been afforded the opportunity to participate in the making of this amendment. All relevant material submitted has been fully considered.

(Secs. 313(a), 601, Federal Aviation Act of 1958; 49 U.S.C. 1354(a), 1421)

In consideration of the foregoing, § 37.180 of Part 37 of the Federal Aviation Regulations is amended to read as hereinafter set forth, effective February 10, 1967.

Issued in Washington, D.C., on December 30, 1966.

C. W. WALKER,
Director, Flight Standards Service.

§ 37.180 Airborne ATC transponder equipment—TSO–C74a.

(a) *Applicability.* This technical standard order prescribes the minimum performance standards that ATC transponder equipment must meet in order to be identified with the applicable TSO marking. New models of equipment that are to be so identified, and that are manufactured on or after February 10, 1967, must meet the requirements of the "Federal Aviation Agency Standard, Airborne ATC Transponder Equipment," set forth at the end of this section and the FAA document for Environmental Test Procedures for Airborne Electronic Equipment, set forth in TSO–C87, effective February 1, 1966 (30 F.R. 15553, Dec. 17, 1965).

(b) *Marking.* (1) In addition to the markings specified in § 37.7, the equipment must be marked to indicate the environmental extremes over which it has been designed to operate. There are six environmental procedures outlined in the FAA document for Environmental Test Procedures for Airborne Electronic Equipment, that have categories established. These must be identified on the nameplate by the words "Environmental Categories" or, as abbreviated, "Env. Cat." folowed by six letters which identify the categories designated. Reading from left to right, the category designations must appear on the nameplate in the following order, so that they may be readily identified:

(i) Temperature-altitude category.
(ii) Vibration category.
(iii) Audiofrequency magnetic field susceptibility category.
(iv) Radiofrequency susceptibility category.
(v) Emission of spurious radiofrequency energy category.
(vi) Explosion category.

(2) Equipment intended for installation in aircraft that operate at altitudes above 15,000 feet must be identified on the nameplate as Class I equipment.

(3) Equipment intended for installation in aircraft that operate at altitudes not exceeding 15,000 feet must be identified on the nameplate as Class II equipment. A typical nameplate identification follows: "Env. Cat. DBAAAX Class I."

(4) Where a manufacturer desires to substantiate his equipment in dual categories for one environment, the nameplate must be marked with both categories in the space designated for that category by placing one letter above the other in the following manner:

A
"Env. Cat. DBAAX Class I."

(5) Each separate component of equipment (antenna, power supply, etc.) must be identified with at least the name of the manufacturer, the TSO number, and the environmental categories over which the equipment component is designed to operate.

(c) *Data requirements.* In accordance with § 37.5, the manufacturer must furnish to the Chief, Engineering and Manufacturing Branch, Flight Standards Division, Federal Aviation Agency, in the region in which the manufacturer is located, the following technical data:

(1) Six copies of the operating instructions and equipment limitations of the manufacturer.

(2) Six copies of the installation procedures with applicable schematic drawings, wiring diagrams, and specifications, and a listing of components (by part number) or possible combinations thereof, which make up a system complying with this TSO. Indicate any limitations, restrictions, or other conditions pertinent to the installation.

(3) One copy of the test report of the manufacturer.

(d) *Previously approved equipment.* Airborne ATC transponder equipment approved prior to February 10, 1967, may continue to be manufactured under the provisions of its original approval.

FEDERAL AVIATION STANDARD

AIRBORNE ATC TRANSPONDER EQUIPMENT

1.0 *General standards*—1.1 *Operation of controls.* The design of the equipment must be such that the controls intended for use during flight cannot be operated in any possible position combination, or sequence that would result in a condition detramental to to the continued performance of the equipment. Controls that are not normally adjusted in flight must not be readily accessible in flight.

1.2 *Operating controls.* In addition to such other operating controls as are neces-

sary, controls must be provided to accomplish the following functions:

a. Selection of reply codes.

b. Selection of "standby" condition.

c. Selection of Mode 3/A only and Modes 3/A and C combined.

d. Activation of identification feature.

1.3 *Effects of test.* Unless otherwise stated, the design of the equipment must be such that the application of the specified tests produces no discernible condition that would be detrimental to the continued performance of equipment manufactured in accordance with such design.

2.0 *Minimum performance standards under standard conditions.* The test conditions and definitions of terms applicable to a determination of the performance of airborne ATC transponder equipment are set forth in Appendix A.

2.1 *Receiver operating frequency and bandwidth.* a. The receiver nominal center frequency must be 1030 Mc.

b. With an input signal level 3 db above the minimum triggering level, the receiver bandwidth must be such that the receiver accepts pulses as outlined in Appendix A with an interrogation center frequency drift of ± 0.2 Mc.

c. The skirt bandwidth must be such that the sensitivity of the receiver is at least 60 db down at ± 25 Mc and beyond.

2.2 *Receiver Sensitivity.* a. The sensitivity of the receiver must be such that the minimum triggering level is at least -72 dbm but not greater than -80 dbm at not less than 90 percent transponder efficiency as measured at the equipment antenna terminal.

b. With the transponder adjusted to comply with paragraph a., the random triggering rate (squitter) must not be greater than five reply pulse groups or suppressions per second averaged over a period of at least 30 seconds.

c. Variation of sensitivity of the receiver between any mode on which it is capable of operating must be less than 1 db.

d. The standards of this section assume that the transmission line loss is 3 db and that a matched resonant, monopole antenna mounted on a large flat highly conductive ground plane is employed. In the event that these assumed conditions do not apply, the equipment must be adjusted as necessary to provide a sensitivity equivalent to that specified.

2.3 *Spurious responses.* All spurious responses, including response to image frequencies, must be such that the response to such signals is at least 60 db down from the normal sensitivity of the receiver.

2.4 *Interrogation.* The equipment must accept and reply to interrogations on at least Modes 3/A and C.

NOTE: Interrogation Modes B and D as defined in Figure 1 have been agreed upon internationally and their use may be specified for certain flight operations. These modes may be provided as optional features on transponder equipment.

2.5 *Side-lobe suppression.* The equipment must provide side-lobe suppression.

2.6 *Decoding performance.* a. Conditions under which transponder must reply. When selected to reply to a particular interrogation mode, and with a signal amplitude range from the minimum triggering level to 50 db above that level, the transponder must reply to at least 90 percent of the interrogations when all of the following conditions are met:

(1) Either the received amplitude of P_1 is in excess of a level of 9 db above the received amplitude of P_3, or no pulse is received 2 ± 0.7 microsecond following P_1.

(2) The received amplitude of P_3 is in excess of a level of 1 db below the received amplitude of P_1.

(3) The received amplitude of a proper interrogation is more than 10 db above the received amplitude of random pulses where the latter are not recognized by the transponder as P_1, P_2, or P_3.

b. *Conditions under which transponder must not reply.* Over the signal amplitude from the minimum triggering level to 50 db above this level, the transponder must not reply to more than 10 percent of the interrogations under either of the following conditions:

(1) The interval between interrogation pulse P_1 and P_2 differs from the specified spacing for the particular mode setting by more than ± 1.0 microsecond.

(2) The interrogations consist of single pulses. However, this does not apply to those combinations of single pulses that occur at the selected interrogation spacing or to single pulses that have amplitude variations approximating a normal interrogation condition.

c. *Side-lobe suppression.* The transponder must be suppressed for a period of 35 ± 10 microseconds following receipt of a pulse pair of proper spacing and amplitude indicative of side-lobe interrogation. This suppression action must be capable of being reinitiated for the full duration within 2 microseconds after the end of any suppression period. The transponder must be suppressed with 99 percent efficiency over the received signal amplitude range from minimum triggering level to 50 db above that level and upon receipt of properly spaced interrogations when the received amplitude of P_2 is equal to or in excess of the received amplitude of P_1 and spaced 2.0 ± 0.15 microsecond from P_1.

2.7 *Transponder discrimination and desensitization*—a. *Pulse width discrimination.* Received signals of amplitude between minimum triggering level and at least 6 db above this level, and of a duration less than 0.3 microsecond, must not cause the transponder to initiate more than 10 percent reply or suppression action. With the exception of pulses having amplitude variations approximating a normal interrogation or suppression pulse pair condition, any pulse of a duration more than 1.5 microseconds must not cause the transponder to initiate reply or suppression action over the signal amplitude range from the minimum triggering level to 50 db above that level.

b. *Echo suppression and recovery*—(1) *Echo suppression desensitization.* Upon receipt of any pulse more than 0.7 microsecond in duration (desensitization pulse), the receiver must be desensitized by an amount that is within at least 9 db of the amplitude of the desensitizing pulse but must at no time exceed the amplitude of the desensitizing pulse except for overshoot during the first microsecond following the desensitizing pulse.

(2) *Recovery.* Following desensitization, the receiver must recover sensitivity (within 3 db of minimum triggering level) within 15 microseconds after reception of a desensitizing pulse having a signal strength up to 50 db above minimum triggering level. Recovery must be nominally linear at an average rate not exceeding 3.5 db per microsecond.

(3) *Narrow pulses.* Single pulses of duration less than 0.7 microsecond must not cause desensitization of duration or amount greater than that permitted in subparagraphs (1) or (2).

c. *Dead time.* After reception of a proper interrogation, the transponder must reply to no other interrogation for the duration of the reply pulse train. This dead time must end no later than 125 microseconds after the transmission of the last reply pulse of the group.

d. *Reply rate control.* A sensitivity-reduction type reply rate control must be provided. The range of this control must permit adjustment of the reply rate to any value between 500 replies per second and the maximum rate of which the transponder is capable, or 2,000 replies per second, whichever is the lesser, without regard to the number of pulses in each reply. Sensitivity reduction in excess of 3 db must not take effect until 90 percent of the selected reply rate is exceeded. The sensitivity must be reduced by at least 30 db when the rate exceeds the selected value by 50 percent.

2.8 *Transponder reply rate capability.* a. For equipment intended for installation in aircraft that operate at altitudes above 15,000 feet (Class I), the reply rate capability must be at least 1,200 reply groups per second for a 15-pulse coded reply.

b. For equipment intended for installation in aircraft that operate at altitudes not exceeding 15,000 feet (Class II), the reply rate capability must be at least 1,000 reply groups per second for a 15 pulse coded reply.

2.9 *Transponder reply code capability.* Transponders must provide the following code capability:

a. Framing pulses (see par. 2.13a.).

b. Information pulses in all combinations of the A, B, C, and D subscript groups, to create 4096 codes (see par. 2.13b.).

c. Special position identification pulse (SPI) (see par. 2.13c.).

2.10 *Reply transmission frequency.* The center frequency of the reply transmission must be 1090 ± 3 Mc.

2.11 *Transmitter power output.* a. For equipment intended for installation in aircraft which operate at altitudes above 15,000 feet (Class I), the transmitter power (peak pulse) must be between 24 and 30 db above 1 watt at the transponder antenna terminal at any reply rate up to 1,200 per second for a 15-pulse coded reply. This standard assumes a transmission line loss of 3 db.

b. For equipment intended for installation in aircraft which operate at altitudes not exceeding 15,000 feet (Class II), the transmitter power (peak pulse) must be between 20 and 28.5 db above 1 watt at the transponder antenna terminal at any reply rate up to 1,000 per second for a 15-pulse coded reply. This standard assumes a transmission line loss of 1.5 db.

c. In the event that the assumed transmission line losses specified in subparagraphs a. and b. of this paragraph do not apply, the equipment must be adjusted as necessary to provide a transmitter power output equivalent to that specified.

2.12 *Reply delay and jitter.* a. The time delay between the arrival, at the transponder input, of the leading edge of P_3, and the transmission of the leading edge of the first pulse of the reply must be 3 ± 0.5 microseconds.

b. The jitter of the reply pulse code group with respect to P_3 must not exceed ± 0.1 microsecond for receiver input levels between 3 and 50 db above the minimum triggering level.

c. Delay variations between modes on which the transponder is capable of replying must not exceed 0.2 microsecond.

2.13 *Reply transmission pulse characteristics*—a. *Framing pulses.* The reply function must employ a signal comprising two framing pulses spaced 20.3 microseconds measured leading-edge to leading-edge at half-voltage points, as the most elementary code.

b. *Information pulses.* Information pulses spaced at intervals of 1.45 microseconds measured leading-edge to leading-edge at the half-voltage points with the first pulse positioned 1.45 microseconds after the first framing pulse must be provided. The designation of these pulses and their position with respect to the first framing pulse is as follows:

Pulse	Position (microseconds)
C_1	1.45
A_1	2.90
C_2	4.35
A_2	5.80
C_4	7.25
A_4	8.70
X[1]	10.15
B_1	11.60
D_1	13.05
B_2	14.50
D_2	15.95
B_4	17.40
D_4	18.85

[1] The X pulse is referenced here for possible future use.

NOTE: Details and nomenclature of the transponder reply pulse codes are set forth in Appendix A.

c. *Special position identification pulse (SPI).* In addition to the information pulses provided, a special position identification pulse, which may be used with any of the other information pulses upon request, must be provided at a spacing 4.35 microseconds following the last framing pulse. When replying to any mode of interrogation to which the transponder is capable, except Mode C, the selection of the SPI pulse must be initiated by an IDENT switch. Upon activation of the IDENT switch, the SPI pulse must be transmitted for a period between 15 and 30 seconds and must be repeatable at any time.

d. *Reply pulse shape.* All reply pulses and SPI pulses must be 0.45±0.10 microsecond in duration and have rise times of from 0.05 to 0.1 microsecond and decay times of from 0.05 to 0.2 microsecond. The pulse amplitude variation of one pulse with respect to any other pulse in a reply train must not exceed 1 db. The rise and decay time may be less providing the sideband radiation is no greater than that which would be produced theoretically by a trapezoidal wave having the stated rise and decay time.

e. *Reply pulse spacing tolerances.* The pulse spacing tolerances for each pulse (including the last framing pulse) with respect to the first framing pulse of the reply group must be ±0.10 microsecond. The pulse spacing tolerance of the special position identification pulse with respect to the last framing pulse of the reply group must be ±0.10 microsecond. The pulse spacing tolerance of any pulse in the reply group with respect to any other pulse (except the first framing pulse) must be no more than ±0.15 microsecond.

2.14 *Pressure-altitude transmission.* The equipment must have the capability for automatic pressure-altitude transmission in 100-foot increments on Mode C when operated in conjunction with a pressure-altitude encoder (digitizer). The equipment must be capable of automatic reply to Mode C interrogations with combinations of information pulses coded in binary form in 100-foot increments necessary for the equipment to operate up to design maximum altitude. Automatic pressure altitude transmission codes pulse position assignment are set forth in Appendix A.

2.15 *Monitor.* If a monitor is provided, any malfunction that is likely to occur must not degrade the transponder operation.

2.16 *Self-test.* If a self-test feature is provided, any malfunction that is likely to occur must not degrade the transponder operation.

2.17 *Antenna.* The equipment antenna radiation pattern must be predominantly vertically polarized and be essentially omnidirectional in the horizontal plane with a nominal vertical beamwidth of at least ±30 degrees from the horizontal plane. The voltage standing wave ratio (VSWR) produced on the antenna transmission line by the antenna must not exceed 1.5 : 1 when operating on the radio frequencies of 1030 and 1090 Mc.

2.18 *Interference suppression pulse response.* If the equipment is designed to accept and respond to suppression pulses from other electronic equipment in the aircraft (to disable it while the other equipment is transmitting), the equipment must regain normal sensitivity, within 3 db, not later than 15 microseconds after the end of the applied suppression pulse.

3.0 *Minimum performance standards under environmental conditions.* Unless otherwise specified herein, the environmental test procedures applicable to a determination of the performance of airborne ATC transponder equipment under environmental conditions are contained in the FAA document for Environmental Test Procedures for Airborne Electronic Equipment set forth in TSO-C87 (30 F.R. 15553), hereafter referred to as FAA Environmental Test Procedures.

3.1 *Temperature-altitude.* The equipment must be tested in accordance with paragraph 4 of FAA Environmental Test Procedures for the category to which the transponder is designed.

a. *Low temperature.* (1) When the equipment is subjected to this test, the standards of the following paragraphs must be met: 2.1a; 2.2, except that at temperatures below −15° C, the sensitivity must not be less than −69 dbm and the variation of sensitivity of the receiver between any mode on which it is capable of operating must be less than 2 db; 2.6a(1); 2.6b(1); 2.6c; 2.7b; 2.7c; 2.10; 2.11; 2.12, except that at temperatures below −15° C the delay variation between modes on which the transponder is capable of replying must be less than 0.4 microsecond; 2.13c; 2.13d; and 2.13e.

(2) Following the low temperature test, the requirements of paragraph 2.17 must be met.

b. *High temperature.* (1) When the equipment is subjected to the high operating temperature, the standards of the following paragraphs must be met: 2.1a; 2.2, except that at temperatures above +40° C, the sensitivity must not be less than −69 dbm and the variation of sensitivity of the receiver between any mode on which it is capable of operating must be less than 2 db; 2.6a(1); 2.6b(1); 2.6c; 2.7b; 2.7c; 2.10; 2.11; 2.12, except that at temperatures above +40° C the delay variation between modes on which the transponder is capable of replying must be less than 0.4 microsecond; 2.13c; 2.13d; and 2.13e.

(2) Following the high temperature test, the requirements of paragraph 2.17 must be met.

c. *Altitude.* (1) When the equipment is subjected to this test, the standards of the following paragraphs must be met: 2.1a. and b.; 2.10; 2.11; and 2.13d.

(2) Following the altitude test, the requirements of paragraph 2.17 must be met.

d. *Temperature variation.* The equipment must be tested in accordance with paragraph 8 of FAA Environmental Test Procedures.

(1) When the equipment is subjected to this test, the standards of the following paragraphs must be met: 2.1a; 2.2, except that at temperatures below −15° C and above +40° C, the sensitivity must not be less than −69 dbm and the variation of sensitivity of the receiver between any mode on which it is capable of operating must be less than 2 db; 2.6a(1); 2.6b(1); 2.6c; 2.7b; 2.7c; 2.10; 2.11; 2.12, except that at temperatures below −15° C and above +40° C, the delay variation between modes on which the transponder is capable of replying must be less than 0.4 microsecond; 2.13c; 2.13d; and 2.13e.

(2) Following the temperature variation test, the requirement of paragraph 2.17 must be met.

3.2 *Humidity.* The equipment must be tested in accordance with paragraph 5 of FAA Environmental Test Procedures. After subjection to this test, and

a. Within 15 minutes from the time primary power is applied, the receiver sensitivity must be within 3 db of that specified in paragraph 2.2 and the transmitter power output must be within 3 db of that specified in paragraph 2.11.

b. Within 4 hours from the time primary power is applied, the standards of paragraphs 2.1 a. and b.; 2.2; 2.10; 2.11; and 2.17 must be met.

3.3 *Shock.* The equipment must be tested in accordance with paragraph 6 of FAA Environmental Test Procedures.

a. Following the application of the 6G shocks, the standards of the following paragraphs must be met: 2.1a.; 2.2; 2.6a.(1); 2.6c.; 2.7b.; 2.7c.; 2.10; 2.11; 2.12; 2.13c.; 2.13d.; 2.13e.; and 2.17.

b. Following the application of the 15G shocks, the equipment must have remained in its mounting and no parts of the equipment or its mounting become detached and free of the shock test equipment.

NOTE: The application of the 15G shock test may result in damage to the equipment. Therefore, this test may be conducted after the other tests are completed.

3.4 *Vibration.* The equipment must be tested in accordance with paragraph 7 of FAA Environmental Test Procedures for the category to which the transponder is designed.

a. When the equipment is subjected to this test, the standards of the following paragraphs must be met: 2.1a.; 2.2; 2.6a.(1); 2.6b.(1); 2.6c.; 2.7b.; 2.7c.; 2.10; 2.11; 2.13c.; 2.13d.; and 2.13e.

b. Following the vibration test, the requirements of paragraph 2.17 must be met.

3.5 *Power input.* The equipment must be tested in accordance with paragraph 9 of FAA Environmental Test Procedures.

a. *Power input variation.* When the equipment is subjected to the voltage and frequency variation test set forth in paragraph 9.1 of FAA Environmental Test Procedures, the standards of the following paragraphs must be met: 2.1a.; 2.2; 2.6a.(1); 2.6b.(1); 2.6c.; 2.7b.; 2.7c.; 2.10; 2.11; 2.12; 2.13c.; 2.13d.; and 2.13e.

b. *Low voltage.* (1) When the equipment is subjected to the test specified in paragraph 9.2a. of FAA Environmental Test Procedures it must operate electrically and mechanically. Degradation of performance is permissible.

(2) When the equipment is subjected to the test specified in paragraph 9.2b.(1) of FAA Environmental Test Procedures, the standards of paragraphs 2.1 a. and b.; 2.2; 2.10; and 2.11 must be met.

(3) When the equipment is subjected to the test specified in paragraph 9.2b.(2) of FAA Environmental Test Procedures, there must be no evidence, external to the equipment, of the presence of fire or smoke.

NOTE: The application of this test may result in damage to the equipment. Therefore, this test may be conducted after the other tests are completed.

3.6 *Conducted voltage transient.* The equipment must be tested in accordance with paragraph 10 of the FAA Environmental Test Procedures. When the equipment is subjected to this test, the standards of paragraphs 2.1 a. and b.; 2.2; 2.10; and 2.11 must be met.

3.7 *Conducted audiofrequency susceptibility.* The equipment must be tested in accordance with paragraph 11 of FAA Environmental Test Procedures. When the equipment is subjected to this test, the standards of paragraphs 2.1 a. and b.; 2.2; 2.10; and 2.11 must be met.

3.8 *Audiofrequency magnetic field susceptibility.* The equipment must be tested in accordance with paragraph 12 of FAA Environmental Test Procedures. When the equipment is subjected to this test, the standards of paragraphs 2.1 a. and b.; 2.2; 2.10; and 2.11 must be met.

3.9 *Radiofrequency susceptibility (radiated and conducted).* The equipment must be tested in accordance with paragraph 13 of FAA Environmental Test Procedures. When the equipment is subjected to this test, the standards of paragraphs 2.1 a. and b.; 2.10; and 2.11 must be met.

3.10 *Emission of radiofrequency energy.* The equipment must be tested in accordance with Appendix A of FAA Environmental Test Procedures for the category to which the transponder is designed. In addition to the maximum levels of radiated CW, broadband and pulsed CW interference between the limits of 0.1 and 1000 megacycles there specified, the maximum levels of radiated CW, broadband and pulsed CW interference between the frequency limits of 1000 and 2500 megacycles are limited to those shown in Figures 20, 21, 22, and 23 for 1000 megacycles for the category to which the transponder is designed.

3.11 *Explosion (if required).* The equipment must be tested in accordance with paragraph 14 of FAA Environmental Test Procedures. During the application of this test, the equipment must cause no detonation of the explosive mixture within the test chamber.

APPENDIX A

1.0 *Test conditions.* The following definitions of terms and conditions of test are applicable to the ATC transponder equipment.

a. *Power input voltage—Direct current.* Unless otherwise specified, when the equipment is designed for operation from a direct current power source, all measurements must be conducted with the power input voltage adjusted to 13.75 volts, ±2 percent for 12–14 volt equipment, or to 27.5 volts, ±2 percent for 24–28 volt equipment. The input voltage must be measured at the equipment power input terminals.

b. *Power input voltage—Alternating current.* Unless otherwise specified, when the equipment is designed for operation from an alternating current power source, all tests must be conducted with the power input voltage adjusted to design voltage ±2 percent. In the case of equipment designed for operation from a power source of essentially constant frequency (e.g., 400 cps), the input frequency must be adjusted to design ±2 percent. In the case of equipment designed for operation from a power source of variable frequency (e.g., 350 to 1000 cps), tests must be conducted with the input frequency adjusted to within 5 percent of a selected frequency within the range for which the equipment is designed.

c. *Adjustment of equipment.* The circuits of the equipment under test must be properly aligned and otherwise adjusted in accordance with the manufacturer's recommended practices prior to the application of the specified tests.

d. *Test instrument precautions.* Due precautions must be taken during the conduct of the tests to prevent the introduction of errors resulting from the improper connection of headphones, voltmeters, oscilloscopes, and other test instruments across the input and output impedances of the equipment under test.

e. *Ambient conditions.* Unless otherwise specified, all tests must be conducted under conditions of ambient room temperature, pressure and humidity. However, the room temperature must not be lower than 10° C.

f. *Warm-up period.* Unless otherwise specified, all tests must be conducted after a warm-up period of not less than fifteen (15) minutes.

g. *Connected load.* Unless otherwise specified, all tests must be performed with the equipment connected to loads having the impedance value for which it is designed.

h. *Interrogation test signal.* The characteristics of the interrogation test signal are:

Radiofrequency. The frequency of the signal generator oscillator must be 1030 mc ±0.01 percent.

CW output. CW output between pulses must be at least 60 db below the peak level of the pulses.

Interrogation. The interrogation must consist of two transmitted pulses designated P_1 and P_3. When providing side-lobe suppression the basic interrogation is supplemented by pulse P_2 transmitted after P_1. The amplitude of P_2 must not be more than 1 db below the radiated amplitude of P_1.

Pulse coding. The interval, measured leading-edge, to leading-edge at half voltage points, between P_1 and P_3, is as follows:

Mode 3/A	8±0.2 microseconds.
Mode B	17±0.2 microseconds.
Mode C	21±0.2 microseconds.
Mode D	25±0.2 microseconds.

The interval between P_1 and P_2 when P_2 is used, must be 2.0±0.15 microseconds.

Pulse shape. The pulse envelope as detected by a linear detector must have a shape falling within the following limits:

(1) *Pulse rise time.* The time required for the leading edge of pulses P_1, P_2, and P_3 to rise from 10 to 90 percent of its maximum voltage amplitude must be between 0.05 and 0.1 microsecond.

(2) *Pulse fall time.* The time required for the trailing edge of pulses P_1, P_2, and P_3 to fall from 90 to 10 percent of its maximum voltage amplitude must be between 0.05 and 0.2 microsecond.

(3) *Pulse duration.* The duration of pulse P_1, P_2, and P_3 must be 0.8±0.1 microsecond measured at the half-voltage points.

i. *Code nomenclature.* The code designations consist of four digits each of which lies between 0 and 7, inclusive, and consist of the sum of the numerical subscripts of the pulse employed as follows:

Digit	*Pulse group*
First	A
Second	B
Third	C
Fourth	D

Examples.

1. Code 3600 consists of information pulses A_1, A_2, B_2, B_4.
2. Code 2057 consists of A_2, C_1, C_4, D_1, D_2, D_4.

j. *Minimum triggering level (MTL).* Means the lowest level of signal to which the transponder will reply to 90 percent of the received interrogations.

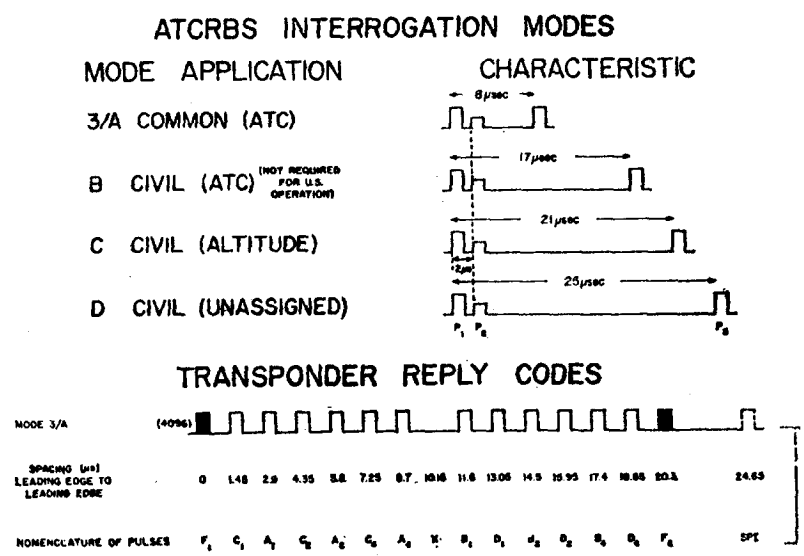

FIGURE 1. ATCRBS, INTERROGATION MODES AND REPLY CODES.

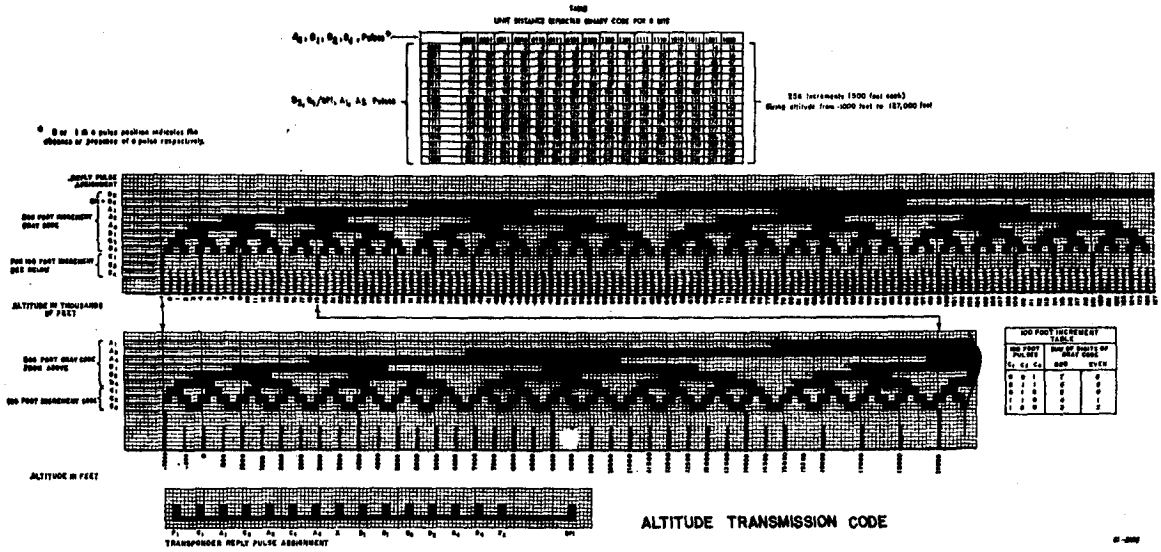

Figure 2. Altitude Transmission Code.