Federal Aviation Administration

Memorandum

Date:	January 28, 2010
To:	See Distribution
From:	Manager, Transport Airplane Directorate, Aircraft Certification Service, ANM-100
Prepared by:	Jeff Gardlin, ANM-115, (425) 227-2136
Subject:	Policy Statement on Interaction of Interior Structures, Including Seats
Memo No.:	ANM-115-09-017
Regulatory Reference:	§§ 25.301, 25.305, 25.561, and 25.562

Summary

This policy memorandum provides guidance to address structural interaction of interior components, including seats.

Definition of Key Terms

In the policy statement below, the formatting (*italics*, plain text, or [square brackets]) and terms used ("must," "should," or "recommend") have a specific meaning that is explained in Attachment 1.

Current Regulatory and Advisory Material

Section 25.301 requires that deflections be included in structural assessments and any redistribution of load as a result of deflections be accounted for. Section 25.305 requires that structure be able to support the prescribed limit loads without detrimental deformation, and for ultimate loads that they be fully accounted for in any analysis used to show compliance. Sections 25.561 and 25.562 specify static and dynamic emergency landing conditions respectively. The requirements of § 25.562 only apply to seats.

Relevant Past Practice

Interior structures/installations (for example, closets, galleys, and lavatories) have historically been designed to avoid load sharing. That is, the deflections that result from applying the static load factors of § 25.561 do not cause deflections that are sufficient for one component to interfere with another. There have been instances where deflections of main deck cargo nets under load could contact an interior component and special provisions were made so that the component was not overloaded.

Depending on the type certification basis of the airplane, some seats must also comply with the dynamic testing requirements of § 25.562. Because seats (for example, passenger, crewrest, attendant, and attendant partitions) tend to have a significant amount of deflection under static and dynamic conditions, there is the potential for seats to contact and impose loads on other seats and interior structure. The most common instance of seats interacting with seats is when a side facing divan is made up of more than one assembly, such as the case where a two-place divan is aft of a single side facing seat to form a three-place divan. Common practice addresses this case with a test, as described in § 25.562(b)(2), using both seat assemblies, in addition to similar tests on each individual seat assembly.

This policy assumes that the emergency landing conditions are the critical load case and each article is capable of reacting its own loads. However, the same approach would be taken, and the same requirements apply, for flight loads. This policy also assumes that § 25.562 is part of the certification basis for the installation. If § 25.562 is not part of the certification basis, then that portion of the policy is not applicable. Note that, given the requirements of § 121.311, compliance with § 25.562 may be required for particular installations, even if the original type certification basis for the airplane does not include § 25.562.

Policy

There are three primary situations that need to be addressed to show compliance with the above noted regulations.

1. Interaction between interior structures other than seats.
2. Interaction between interior structures and seats.
3. Interaction between seats.

As a general principle, the component that transfers its load onto another component has reduced criticality, and the interference is beneficial (some possible exceptions are discussed below.) Conversely, the component being loaded has increased criticality, and the interference is detrimental.

As noted above, situation 1 is a fairly uncommon occurrence by design and in the past has been dealt with either through tests, or by analysis and tests. Adding 50% of the applied load (the load factor from § 25.561 times the weight of the component) from the aft structure to the loads of the forward structure is an acceptable method of compliance. The additional load should be applied

at the point of contact. When establishing if there is interference, it is acceptable to consider the deflection of both components under their own inertia loads. An applicant could also perform more sophisticated analysis, or conduct actual tests to establish different interaction loads, but the policy provides a simplified method of substantiation. Additionally, the dynamic loading requirements of § 25.562 are only applicable to seats, so need not be considered in this situation. Closeout seals between interior structures need not be considered as a load path, if the applicant shows they are readily compressible and essentially do not transfer load.

Situation 2 can occur from a seat contacting and loading a structure, or a structure contacting and loading a seat (see figures 1 and 2). In this situation, the only load cases relevant from a certification standpoint are the static load factors. Since only seats are affected by § 25.562, the deflections caused by the § 25.562 test conditions do not apply when determining the effect on other types of structure. Therefore, this situation can be handled the same as situation 1, and the same criteria apply. Static deflections resulting in 1″ or less interference by the seatback of an aft facing seat, or into the seatback of a forward facing seat, do not require assessment because this amount of deflection can be accommodated with local compression of the seatback. Use the point of maximum deflection to establish whether there is interference. [Even though the regulations do not require assessment of dynamic deflections and resulting interactions between seats and other components, we recommend that applicants assess this situation to confirm that no catastrophic failures would occur.]

Situation 3 can be an issue when an aft facing seat is aft of a forward or side facing seat. In this case, the aft facing seatback is potentially subject to large deflections and can load a seat forward of it, as illustrated in figure 3. When showing compliance with § 25.301, considering the requirements of § 25.562, it is likely that a test incorporating both seats will be necessary if the amount of interference is significant. In this case, interference is significant if the dynamic deflection of the seat imparting load is more than 1″ into the envelope of the seat (that is, the outer boundary of the seat) being loaded, <u>unless</u> the point of interference is with two rigid elements (for example, tube to tube or tube to spreader), in which case any interference should be addressed. Include the dynamic deflections of the seat being loaded when determining whether there is interference. It is acceptable to use the maximum deflections (at the point of contact) of each seat as the basis for assessment. Section 25.562(b)(3) also requires the application of floor distortion (pitch and roll) when substantiating the structural capability of a seat. In the case of tests to address structural interference, the seat that is being loaded should have the floor distortion applied, since that is the seat that is being critically loaded.

There are also instances for the three situations where contact between two components can introduce a new load path, or load case, into the component *imparting* load. For example, contact can create a bending moment in a structure that is not designed to react to bending. It is also possible for contact between dissimilar components (for example, an aft facing double seat behind a forward facing single seat or a stowage unit offset from a seat) to create eccentric loading, which is outside the design envelope of the structure. In these situations an assessment of both components is necessary. Attachment 2, Figure 4, illustrates two situations where contact between components introduces a new load path or load case.

When making these assessments, consider only the critically loaded (occupied) case. If the seat receiving load is not critically loaded, it is possible that it will deflect less, and as result there will

be more interference with the seat imparting the load. However, the fact that the seat is not critically loaded compensates for the change in load sharing that occurs.

Substantiation used to show compliance with § 25.562 is considered to also satisfy the requirements of § 25.561 with respect to load sharing. Substantiation of compliance with § 25.561 for other seats can follow the procedure outlined for situations 1 and 2. Situations 2 and 3, discussed above, are depicted schematically in Attachment 2.

This policy assumes that the emergency landing conditions are the critical load case. However, the same approach would be taken, and the same requirements apply, for flight loads. This policy also assumes that § 25.562 is part of the certification basis for the airplane. If § 25.562 is not part of the certification basis, then that portion of the policy is not applicable.

Note that this policy only covers structural interference. Substantiation of injury criteria is also required to obtain installation approval, and may require different tests.

Effect of Policy

The general policy stated in this document does not constitute a new regulation. The FAA individual who implements policy should follow this policy when it is applicable to a specific project. Whenever a proposed method of compliance is outside this established policy, that individual has to coordinate it with the policy issuing office using an issue paper. Similarly, if the implementing office becomes aware of reasons that an applicant's proposal should not be approved, the office must coordinate its response with the policy issuing office.

Applicants should expect that certificating officials would consider this information when making findings of compliance relevant to new certificate actions. In addition, as with all advisory material, this statement of policy identifies one means, but not the only means, of compliance.

Implementation

This policy discusses compliance methods that should be applied to type certificate, amended type certificate, supplemental type certificate, and amended supplemental type certification programs. The compliance methods apply to those programs with an application date that is on or after the effective date of the final policy. If the date of application precedes the effective date of the final policy the applicant may choose to either follow the previously acceptable methods of compliance or follow the guidance contained in this policy.

Conclusion

Interaction of interior structures under load must be considered under the regulations. In most cases this is already common practice, or is not an issue. However, in some cases, the requirement to address this interaction may not have been well understood, and should be included in future certification substantiation.

Signed by Ali Bahrami

Ali Bahrami

Attachment 1: Definition of Key Terms

Attachment 2: Figures 1-4

Distribution List:

Manager, Los Angeles Aircraft Certification Office, ANM-100L
Manager, Denver Aircraft Certification Office, ANM-100D
Manager, Seattle Aircraft Certification Office, ANM-100S
Manager, Anchorage Aircraft Certification Office, ACE-115N
Manager, Wichita Aircraft Certification Office, ACE-115W
Manager, Chicago Aircraft Certification Office, ACE-115C
Manager, Atlanta Aircraft Certification Office, ACE-115A
Manager, Ft. Worth Airplane Certification Office, ASW-150
Manager, Ft. Worth Special Certification Office, ASW-190
Manager, New York Aircraft Certification Office, ANE-170
Manager, Boston Aircraft Certification Office, ANE-150
Manager, International Branch, ANM-116
Manager, Brussels Aircraft Certification Staff, AEU-100
Manager, Standardization Branch, ANM-113
Manager, Rotorcraft Directorate Standards Staff, ASW-110
Manager, Small Airplane Directorate Standards Office, ACE-110
Manager, Engine and Propeller Directorate Standards Staff, ANE-110

Definition of Key Terms

Table A-1 defines the use of key terms in this policy statement. The table describes the intended functional impact, and the formatting used to highlight these items.

- The term "must" refers to a regulatory requirement that is mandatory for design approval. Text communicating a requirement is in *italics*.
- The term "should" refers to instructions for a particular method of compliance. If an applicant wants to deviate from these instructions, he has to coordinate the alternate method of compliance with the Transport Standards Staff using an issue paper. There is no special text formatting used for methods of compliance.
- The term "recommend" refers to a recommended practice that is optional. Enclose recommendations in [ ] brackets.

Table A-1 Definition of Key Terms

	Regulatory Requirements	**Acceptable Methods of Compliance**	**Recommendations**
Language	Must	Should	Recommend
Format	*Italics*	Regular text (No special formatting)	[Square brackets]
Functional Impact	No Design Approval if not met	Alternative has to be approved by issue paper.	None, because it is optional

Examples from policy on Power Supply Systems for Portable Electronic Devices (PSS for PED):

- *Even though PSS for PED systems may use wiring that is produced for the consumer market, the wiring must meet the flammability requirements of § 25.869.*
- Although multiple power control switches may be used (e.g., zonal control of system power), there should be a single master switch that allows for the immediate removal of power to the entire PSS for PED
- [We recommend that you provide a means of indication to enable the cabin crew to determine which outlets are in use or which outlets are available for use.]

Attachment 2

Applied load to closet = Loads from § 25.561 for Closet + 50% loads from § 25.561 from seat.

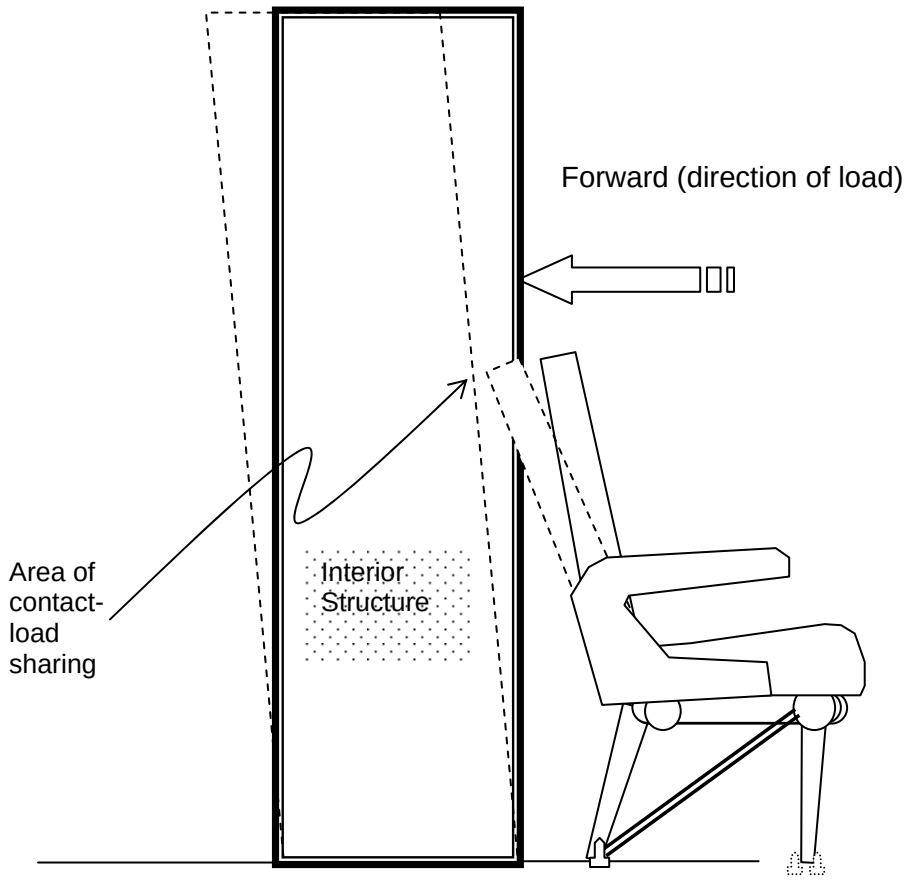

Figure 1

Example of interaction between seat and interior structure

Attachment 2

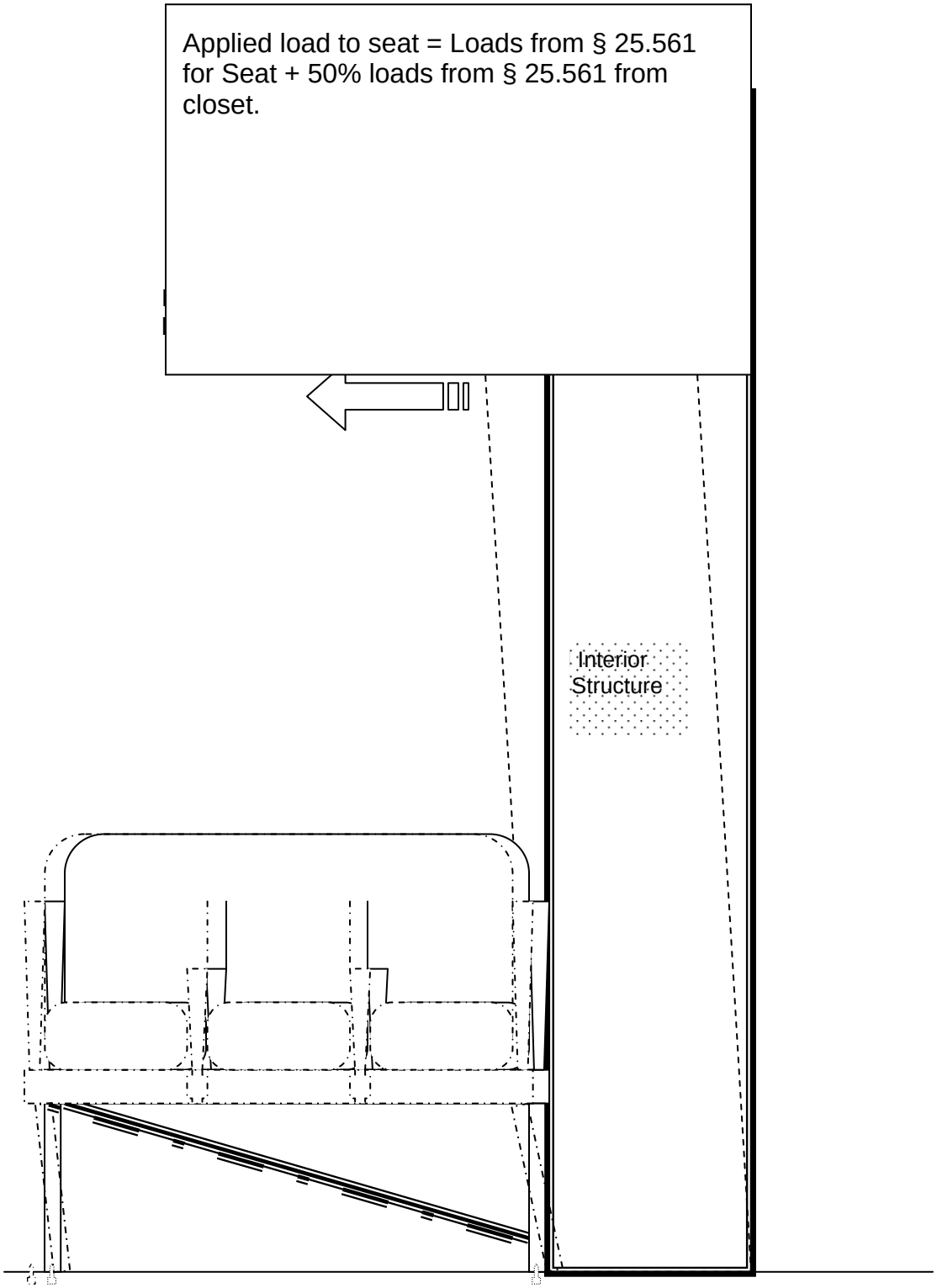

Figure 2

Interior structure interaction with seat

Attachment 2

Applied load to Fwd seat = Loads from § 25.562 for Seat + loads from § 25.562 from aft seat.

Dynamic Test Likely Required

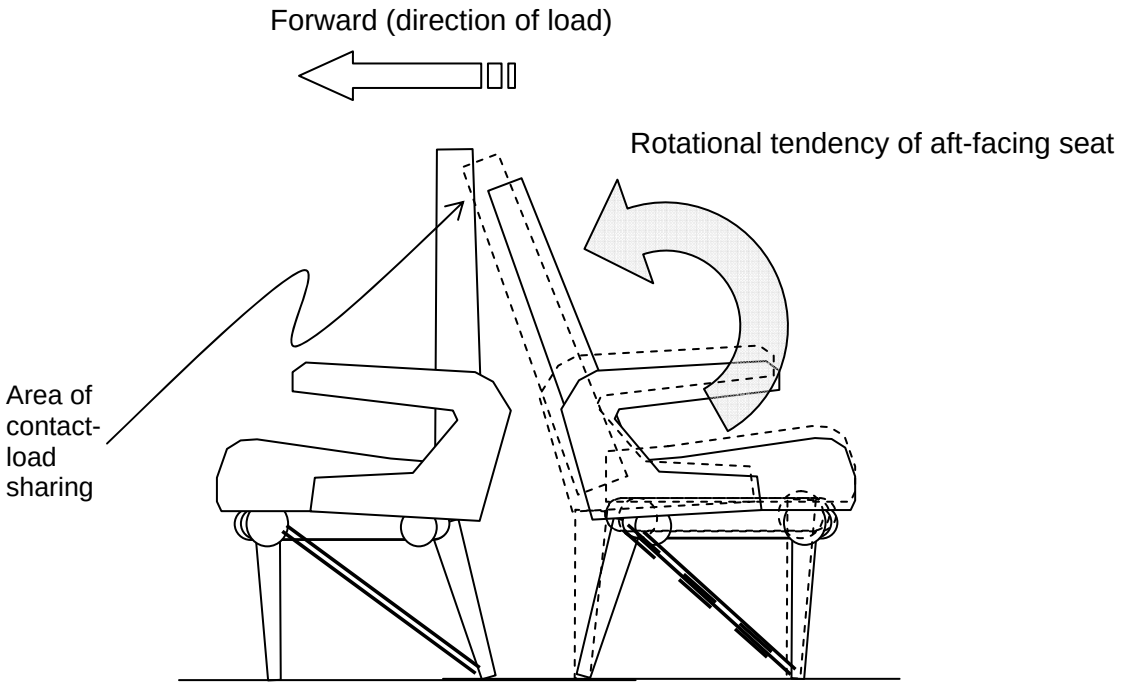

Figure 3

Example of interaction between aft-facing and forward-facing seats

Attachment 2

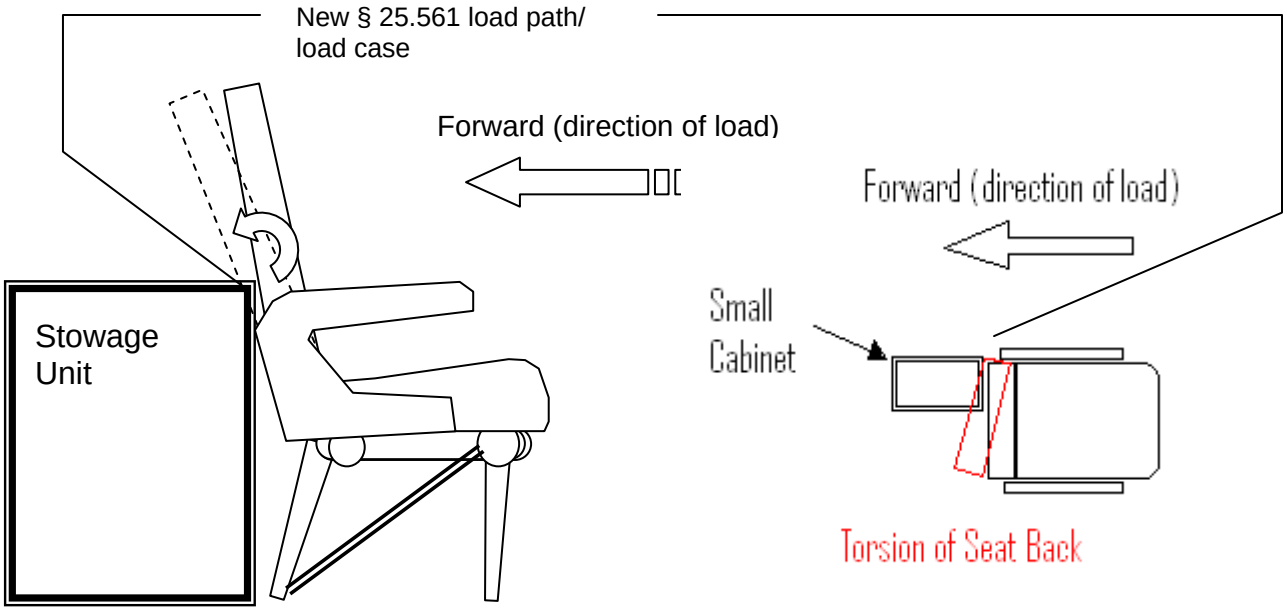

4a. 4b.

Figure 4

Contact introduces new load path
and load case