121-187(4)

federal register

Monday
July 21, 1986

Part II

Department of Transportation

Federal Aviation Administration

14 CFR Parts 25 and 121

Improved Flammability Standards for Materials Used in the Interiors of Transport Category Airplane Cabins

DEPARTMENT OF TRANSPORTATION

Federal Aviation Administration

14 CFR Parts 25 and 121

[Docket No. 24594; Amdt. Nos. 25-61 and 121-189]

Improved Flammability Standards for Materials Used in the Interiors of Transport Category Airplane Cabins

AGENCY: Federal Aviation Administration (FAA), DOT.

ACTION: Final rule; Request for additional comments.

SUMMARY: These amendments upgrade the fire safety standards for cabin interior materials in transport category airplanes by: (1) Establishing new fire test criteria for type certification; (2) requiring that the cabin interiors of airplanes manufactured after a specified date and used in air carrier service comply with these new criteria; and (3) requiring that the cabin interiors of all other airplanes type certificated after January 1, 1985, and used in air carrier service, comply with these new criteria upon the first replacement of the cabin interior after a specified date. These amendments are the result of research and fire testing and are intended to increase airplane fire safety.

The FAA also requests additional comments on the final flammability criteria for possible refinement of either the test procedures or acceptance criteria.

DATES: *Effective Date:* August 20, 1986.

ADDRESSES: Send comments to: Federal Aviation Administration, Office of the Chief Counsel, Attn: Rules Docket [AGC-204], Docket 24594, 800 Independence Avenue SW., Washington, DC 20591. Comments due on or before September 19, 1986.

FOR FURTHER INFORMATION CONTACT: Gary L. Killion, Manager, Regulations Branch (ANM-112), Transport Standards Staff, Aircraft Certification Division, FAA, Northwest Mountain Region, 17900 Pacific Highway South, C-68966, Seattle, Washington 98168; telephone (206) 431-2112.

SUPPLEMENTARY INFORMATION:

Background

These amendments are based on Notice of Proposed Rulemaking (NPRM) No. 85-10, which was published in the Federal Register on April 16, 1985 (50 FR 15038). The notice proposed to upgrade the flammability safety standards for materials used in the interiors of transport category airplane cabins.

As discussed in the notice, the FAA established a committee in June of 1978, to examine the factors affecting the ability of the aircraft cabin occupant to survive in the post-crash environment and the range of solutions available. The Committee was composed of fire safety experts from the National Aeronautics and Space Administration, the aerospace industry, and the general public. Included in the recommendations of this committee, which was known as the Special Aviation Fire and Explosion Reduction (SAFER) Advisory Committee, were further research and development in regard to cabin materials and prompt evaluation and implementation of a method using radiant heat for testing cabin materials. The FAA concurred and initiated the necessary research and development. The resulting research and development program, which was managed and conducted primarily at the FAA Technical Center in Atlantic City, New Jersey, was designed to study aircraft fire characteristics, develop practical test methods, and investigate the feasibility of the various new standards being considered at that time. Further study concerning toxicity was conducted at the FAA Civil Aeromedical Institute (CAMI) in Oklahoma City.

Among the tests conducted at the Technical Center were full-scale fire tests using the fuselage of a military C-133 configured to represent a wide-body jet transport. The test conditions simulated representative post-crash external fuel-fed fires. Numerous laboratory tests were also conducted to correlate possible material qualification test methods with the full-scale tests. As a result of these tests, the Ohio State University (OSU) rate of heat release apparatus, as standardized by the American Society of Testing and Materials (ASTM), ASTM-E-906, was determined to be the most suitable for material qualifications. The OSU rate of heat release apparatus employs radiant heat, which the SAFER Advisory Committee recommended because it is most representative of the post-crash fire environment. The ability of the test method to adequately discriminate acceptable from unacceptable materials was verified using several generic materials. The generic materials covered a range of flammability characteristics and each was tested and ranked in the full-scale fire test facility. Sample materials were then tested and ranked using the OSU apparatus. The ranking of materials from the OSU tests was identical to that obtained in the full scale fire facility. Thus, the OSU apparatus demonstrated that it would accurately predict what could be expected of interior materials in typical post-crash fires. The proposed acceptance criteria in Notice 85-10 were chosen in order to produce a significant retardation of flashover as predicted by the full-scale testing.

Consideration was also given to establishing separate test methods and standards for interior materials with respect to smoke and toxicity. As discussed in Notice 85-10, this was not done because of the lack of feasible test procedures, and because full-scale tests have shown a significant correlation between flammability characteristics and smoke and toxic emissions.

As proposed in Notice 85-10, all large interior surface materials installed above the floor in compartments occupied by the crew or passengers would have to be qualified to the new flammability standards. This would include sidewalls, ceilings, bins and partitions, galley structures, and any coverings on these surfaces. Smaller items, such as windows, window shades, or curtains, would not be included. Floor coverings, floor structure, seats, and service items would not be included for the reasons discussed in Notice 85-10. In addition to the testing required to meet the new flammability standards, interior materials would still have to meet the current vertical Bunsen burner test because extremely thin materials might not release enough heat to exceed the proposed standards, yet would be highly flammable.

As proposed, Part 25 would require the use of cabin interior materials meeting the new flammability standards for all transport category airplanes for which application for type certification is made after the effective date of the amendment. Part 121 would require the use of such materials in all airplanes newly manufactured two years or more after the effective date of the amendment and operated under the provisions of Part 121 or 135, regardless of the basis for type certification. (Section 135.169(a) incorporates the provisions of § 121.312 by reference insofar as operations with large airplanes are concerned.) In addition, all other large airplanes type certificated after January 1, 1958, and operated under the provisions of Part 121 or 135 would have to be modified to use such materials the first time the cabin interior is replaced after a date two years from the effective date of the amendment.

The public comment period for Notice 85-10 originally closed on July 15, 1985; however, as announced in Notice 85-10A (50 FR 30447; July 26, 1985), it was reopened until September 9, 1985. Sebsequent to the issuance of Notice 85-10, an industry trade association and the

FAA Technical Center completed two series of round-robin tests to assess the reproducibility of test results using the OSU rate of heat release apparatus among various laboratories. In the round-robin testing, the same group of materials was tested by each laboratory. This assessment was necessary because preliminary testing by the industry to evaluate the cost impact of the proposed rule yielded results significantly different from those obtained using the FAA OSU apparatus. During the retesting, several materials representative of inservice interior panels were tested by the FAA, Ohio State University, and two large airplane manufacturers. The first series of tests completed subsequent to issuance of Notice 85–10, indicated that the FAA apparatus had an incorrect heat flux calibration, and there were several significant areas where other test apparatus differed from that of the FAA. The non-FAA test apparatus were modified to more closely match those of the FAA. After the second series of round-robin tests, much closer results were achieved among the laboratories.

Based on the round-robin tests, the Technical Center recommended certain adjustments in test procedures and acceptance criteria. In particular, the recommendations include: (1) Adjustment of the specimen exposure heat flux from 5 watts per square centimeter (W/cm^2) to 3.5 W/cm^2; (2) elimination of the oxygen depletion method of measuring heat release, leaving only the thermopile method; (3) adjustment of the acceptance criteria for total heat release over the first two minutes of sample exposure from 40 to 65 kilowatt-minutes per square meter; and (4) inclusion of a requirement for a peak heat release rate of 65 kilowatts per square meter.

In Notice 85–10A the FAA proposed a change to the exposure heat flux from 5 W/cm^2 to 3.5 W/cm^2. The value in Notice 85–10 was based upon the incorrect heat flux calibration as discussed above. When the proper calibration was utilized a heat flux of approximately 3.5 W/cm^2 resulted. Thus, the change in Notice 85–10A was merely to correct the heat flux value and resulted in no significant change to the test results from those experienced when the incorrect 5 W/cm^2 value was used.

Measurement of the heat release rate by the oxygen depletion method in addition to the thermopile method was proposed in Notice 85–10 because the former was believed to be the more accurate and consistent method as shown by initial testing. During the subsequent series of tests, the thermopile method was found to provide test results that were consistent with those of the oxygen depletion method. Because use of the oxygen depletion method adds to the complexity of the test and the equivalent is more difficult to maintain, the FAA recommended that it be deleted in Notice 85–10A.

The FAA proposed in Notice 85–10A to increase the acceptance criteria for heat release over the first two minutes of sample exposure from 40 to 65 kilowatt-minutes per square meter in conjunction with a maximum peak heat release limit of 65 kilowatts per square meter. The requirement for a maximum peak release would safeguard against the use of materials which have relatively low levels of total heat release but which, nevertheless, emit a large amount of heat over a short duration. The use of such materials could allow fire to spread rapidly through a cabin. During the series of round-robin testing there were numerous changes made to the test procedures from those used to establish that a heat release value of 40 kilowatts per square meter, as proposed in Notice 85–10, correlated with the intended level of safety derived from the full-scale tests. The new test procedures affected the correlation with the full-scale test results and discrimination of materials, such that the heat release value had to be increased to 65 killowats per square meter in order to maintain proper correlation. This change in value thus had no effect on the level of safety and discrimination of materials intended by Notice 85–10. As discussed in Notice 85–10A, a copy of the memorandum report containing recommendations made by the FAA Technical Center was placed in the Rules Docket for public inspection and comment during the reopened comment period.

Discussion of Comments

Numerous commenters, comprising airplane and equipment manufacturers, airplane operators, material producers, airplane crew organizations, foreign airworthiness authorities, other government organizations, and an individual, responded to Notices 85–10 and 85–10A. The vast majority of the commenters support the intent of the proposal; however, many believe that the test method is not sufficiently developed and that the FAA economic analysis of the proposal is understated. The following FAA responses to comments are discussed according to the subject matter of the comment.

One commenter believes that the standards for flammability of interior materials presently contained in § 25.853 are sufficient in light of the recently adopted standards for flammability of seat cushions, smoke detectors and hand-held fire extinguishers. The commenter further believes that the chances of survival would have diminished long before flashover occurs due to the intense heat required for flashover.

The FAA finds that, while the recently adopted standards do contribute significantly to the overall chance of survival in a post-crash environment, they do not, in any way, diminish the further improvement that is possible through the use of improved interior materials. Contrary to the commenter's belief, the full-scale tests have shown that safe egress is not precluded until the time flashover occurs.

Several commenters offer views concerning the decision of the FAA not to propose standards for smoke and toxicity. As discussed in Notice 85–10, the full-scale tests demonstrated a significant correlation between flammability and smoke emission characteristics in the materials tested. Because of this correlation, it is not necessary to establish separate test procedures for smoke and flammability. Flammability is a more significant factor in survivability than smoke alone. It would, therefore, be inappropriate to establish test procedures and standards for smoke in lieu of flammability. Similarly, the full-scale tests showed that there is a significant correlation between flammability and toxic emissions and that the severe hazard from toxic emissions occurs as a result of flashover in fires involving interior materials. Thus, the new flammability standards indirectly address toxicity by requiring the use of cabin interior materials with reduced heat release rates that delay or prevent the onset of flashover (a condition when high levels of toxic emissions occur). It must also be noted that standards for toxicity would be especially difficult to establish because levels of human tolerance to typical post-crash fire toxicants have not been adequately defined.

Several commenters express their concurrence with the FAA decision concerning smoke and toxicity. Contrary to this view, however, two commenters state that the amount of smoke and toxic gases released in a fire will be determined primarily by the amount of material decomposed by combustion or thermal degradation and that the amount of decomposed material is, in turn, primarily a function of fire propagation across the surface. The commenters conclude from this that the proposed rate of heat release test is not

suitable to evaluate these criteria. The FAA Technical Center, in conjunction with the National Bureau of Standards, has previously evaluated possible test means of measuring the rate of flame spread. None were found to be feasible for type certification testing. It should be noted, however, that the full-scale fire tests conducted by the Technical Center did involve spreading flames. The correlation of the rate of heat release tests with the full-scale tests has shown that heat release is an indication of the rate of flame spread; therefore, the FAA does not concur with the commenters' conclusion.

One commenter questions the FAA decision not to adopt criteria for smoke and toxicity with respect to in-flight fires originating behind panels. As stated previously, the criteria proposed in Notices 85–10 and 85–10A was based upon post-crash external fuel-fed fires. These represent the largest percentage of fires resulting in injuries or fatalities. While the long term effects of smoke or toxicants from hidden in-flight fires is of concern to the FAA, additional research is necessary to define the essential fire parameters and identify valid, realistic material performance criteria. Rather than delay this rulemaking until a complete fire solution is available for in-flight fires originating behind panels, the FAA believes it is important to potential occupant survival in post-crash fires to proceed with this rulemaking and address the in-flight fire hazard at a later date through FAA research being conducted to evaluate the hidden fire threat.

Two commenters request assurance that no further rulemaking with respect to smoke and toxicity is anticipated in the foreseeable future. Based on the information currently available, the FAA has no plans to establish standards for either smoke or toxicity; however, this does not preclude taking such action in the future if, as noted above, further research shows such standards are warranted and human tolerance levels can be adequately defined.

One commenter believes that the rate of heat release test is costly and unnecessary. In lieu of this test, the commenter proposes to revise § 25.853 by eliminating the 12 second vertical test and requiring that all materials pass the 60 second vertical test. The allowable burn length would also be reduced from six inches to three inches, and standards for smoke and toxicity would be established. The FAA does not concur that the commenter's proposal would achieve the desired improvement in post-crash survivability. The interior materials that would have to meet the proposed rate of heat release test are, in fact, currently required to pass the 60 second vertical test in accordance with § 25.853(a) and paragraph (d) of Part I of Appendix F to Part 25. Thus, the commenter in effect is proposing to do nothing more than is presently being required, the end result being no improvement in material flammability. Also, the Bunsen burner test is not an adequate test to predict the behavior of materials when subjected to the high radiant heat of a post-crash fire. Smoke and toxicity standards are not considered appropriate or feasible for the reasons noted above.

One commenter believes that the vertical Bunsen burner test currently required by § 25.853 should be deleted because materials which will pass the proposed rate of heat release test will also pass the vertical Bunsen burner test. The FAA concurs that typical interior materials which will pass the rate of heat release test will easily pass the vertical Bunsen burner test. It is possible, however, that an extremely thin material might not release enough heat to exceed the proposed standards, yet would be highly flammable. The vertical Bunsen burner test is relatively simple and inexpensive to perform. It is, therefore, retained to ensure that unacceptable thin, highly flammable materials which would pass the rate of heat release test will not be used.

One commenter questions why the flammability standards proposed in Notice 85–10 were not also proposed for transport category rotorcraft which are type certificated under the provisions of Part 29 of this Chapter. The FAA research and development program, which led to the proposed standards, was based on a typical post-crash, externally-fed fire scenario involving a large airplane. The scenario assumed that, due to the size of the airplane, at least some of the occupants would be distant enough to survive the initial outbreak of the fire. Delaying the involvement of the entire cabin in the fire would, therefore, afford occupants more time in which to safely egress. Due to their relatively small cabin size, this scenario would not be applicable to typical transport category rotorcraft. Additional investigation would be necessary to establish typical rotorcraft post-crash fire scenarios and to determine whether realistic survivability improvements could be expected. There is reason to believe that the new technologies in interior materials created by persons complying with this rule would be used in other categories of aircraft without regulatory action.

Two commenters request the exclusion of smaller transport category airplanes from compliance with the proposed flammability standards. One of the two notes that the economic benefits of the proposed standards would not be realized for smaller transport category airplanes and that the accident record of such airplanes should be examined separately. The other commenter notes that the smaller transport category airplanes are frequently outfitted with more luxurious executive type interiors and subsequently used for executive charter or air taxi operations under the provisions of Part 135. The commenter notes that the materials tested during the FAA research and development program reflect the more mundane interiors found in air carrier cabins with high density seating and do not reflect those found in the more luxurious executive interiors. The commenter further notes that the evacuation time needed for smaller transport category airplanes is greatly reduced when compared to large, high density airline airplanes and, therefore, the exposure to heat, smoke, and fumes from burning material is greatly minimized. The commenter suggests that airplanes of 30 passenger capacity or less operating under the provisions of Part 135 should be excluded from compliance with the new standards.

The FAA concurs that the research and development program which led to the proposed standards was based on a scenario involving a larger airplane and may not have produced data directly applicable to the smaller transport category airplanes. Also, the FAA concurs that the time needed to evacuate smaller transport category airplanes with relatively few passengers is much less than that needed for large, high density airline airplanes. The FAA does not agree, however, that the materials tested are not representative of interiors that might be used in executive interiors used in Part 135 operations. To the contrary, the materials used in executive interiors would fall within the range of materials tested and thus the proposed criteria would be appropriate for executive interiors. Even if materials are used that are outside the range of the materials tested, the proposed criteria would still be adequate since they are based upon unchanging laws of physics and ensure an appropriate level of safety. While the FAA believes that there is a size of airplane at which the expected benefits from the proposed rule will significantly diminish, results of past flammability tests provide no basis to exclude

airplanes of 30 passenger capacity or less. Furthermore, no data was presented by the commenter to justify its proposal. Thus, the FAA has looked to existing safety standards to delineate a logical airplane capacity below which compliance with the proposed rules is not required.

A maximum capacity of 19 passengers has been recognized previously as an appropriate dividing line in a number of issues involving cabin safety. For example, § 135.107 requires a flight attendant to be on board an airplane operated under the provisions of Part 135 with a passenger seating capacity greater than 19. Similarly, 19 passengers is the maximum seating capacity with which normal category airplanes may be type certificated under the provisions of Special Federal Aviation Regulations (SFAR) 41 for operation under Part 135. For the same reasons that 19 passengers was chosen as the dividing line in these other issues and for consistency, 19 passengers is considered an appropriate dividing line for the new flammability standards. Accordingly, § 25.853 specifies that the flammability standards apply only to airplanes with passenger capacities greater than 19. This, of course, applies also to airplanes operated under Part 121, as § 121.312 will incorporate the provisions of § 25.853 by reference, and to those operated under Part 135, as § 135.169 incorporates the provisions of § 121.312, in turn, by reference. As discussed above, this amendment applies primarily to a post-crash, externally-fed fire scenario. As also discussed above, the FAA intends to conduct further research concerning the effects of fires in hidden areas. This action does not preclude future rulemaking that would require smaller airplanes to comply with the new flammability standards if warranted by further research.

A number of commenters believe that the regulatory evaluation is in error and that the actual cost will be several times greater than the estimate contained in Notice 85–10 because more testing would be required than assumed in the cost analysis. The FAA has revised the economic analysis for this rule based upon this and other comments addressed later in this document. Compliance with the 65 kilowatts per square meter standard has been extended to 4 years rather than the 2 years proposed to reduce the economic impact of the rule.

Comments suggested the FAA testing was flawed because it only looked at generic materials during the full-scale tests. Commenters also suggest that some generic materials containing certain base resins, such as phenolics, demonstrated good performance while actual in-service panels with the same base resins showed less than desirable results. As a result of these discrepancies in test results, commenters have characterized the OSU rate of heat release test procedures as an unreliable predictor of the performance of materials under expected post-crash fire conditions. The FAA does not agree with these characterizations.

The generic materials were not developed to be completely identical to in-service panels. Instead, they were developed to provide a continuum of test results over a range of expected values for typical in-service panels. It must be understood that the objective of the test was not to establish the behavior of typical in-service panels but to perform enough testing to show that the small-scale OSU apparatus accurately predicted the full-scale test results. It is not necessary to use in-service materials to show this correlation. The FAA believes that the correlation has unquestionably been demonstrated. The fact that in-service panels with base resins identical to those of generic panels tested do not behave in the same manner does not surprise the FAA. The in-service materials have flammable decorative finishes over the basic honeycomb/resin matrix which produces these "apparent" discrepancies. The FAA believes that OSU apparatus results showing some in-service materials behave worse than similar generic materials are accurate and are merely a reflection of the fact that the decorative material diminishes the overall performance of the panel. The FAA believes that commenters suggesting that the rulemaking should be deferred until full-scale testing could be conducted on all in-service materials to properly rank their flammability have possibly misunderstood the basic objectives of the FAA full-scale testing as discussed above.

Commenters also suggested that the rulemaking action was premature because the previously discussed round-robin testing showed that the material tested within a particular laboratory showed inadequate repeatability and the values were not correlatable from laboratory to laboratory. As previously discussed, the differences in test results have already been minimized by the changed test procedures and equipment that have resulted from the two series of tests conducted jointly by the Technical Center and the trade association members. Data presented by the three industry laboratories and the FAA, as contained in the docket, shows good repeatability of results within a particular laboratory. With regard to correlation between individual laboratories, even the industry organization that was generally critical of the OSU test results stated, "While these variations (between lab averages) range in the 10 to 15 percent levels they are considered reasonable, particularly for fire testing with the attendant problems and the tendency for each fire to have its own personality." The FAA concurs with this commenter and believes the level of correlation to be very good and well within the range expected for flammability testing. The FAA further believes that the test correlation and repeatability demonstrated by the second series of round-robin tests clearly demonstrates the adequacy of the OSU apparatus as a discriminator of materials to a level necessary to proceed with this rulemaking. The FAA still believes there are additional improvements that could be made to improve correlation and is further evaluating the discrepancies between the four laboratory test apparatus. The FAA plans a third series of round-robin tests to assess what improvements can be made in test results correlation. Nevertheless, the FAA clearly believes the present demonstrated correlation is sufficient to proceed with use of the proposed OSU test apparatus and will enhance the level of fire protection safety.

Commenters also note that the OSU rate of heat release apparatus specified for compliance with the proposed flammability standards is costly and not widely available. Presently, the FAA is aware of four laboratories that have the OSU rate of heat release apparatus in use for testing airplane interior materials for certification. One is in use at OSU on a consulting basis, two are used by domestic aircraft manufacturers, and one is used by a European aircraft manufacturer. Fifteen other laboratories in the U.S. currently use OSU rate of heat release apparatus for non-aircraft applications. Presumably these would also be available for aircraft use, if needed. It is anticipated that other laboratories will acquire the OSU rate of heat release apparatus as the need develops. While the OSU rate of heat release apparatus is more costly than the Bunsen burner required to show compliance with the present standards, the FAA is not aware of, and commenters have not proposed, any other test method that is a satisfactory means of showing compliance with the new flammability standards.

Commenters disagree with the statement in Notice 85–10 that, "there is no cost associated with switching manufacturing processes to use only materials which comply with the proposed tests." As an example, one commenter cites the change from thermo-formed parts to resin impregnated glass fiber which involves high cure temperatures and special tools. The statement in Notice 85–10 was based on the assumption that the already widely used material, which was found to give the minimum acceptable performance in the full-scale testing, would be retained and could be used to replace materials that do not meet the new flammability standards. The FAA does concur, however, that additional costs would be incurred in switching to materials requiring new manufacturing processes. Another commenter disagrees with the assumption that, of six types of airplanes now in production, each has only four types of panels (sidewalls, partitions, ceilings and storage bins), making a total of 24 types to be evaluated. The commenter notes that many more tests would have to be conducted due to variations in size, material, decorative finish, etc. Commenters also note that tests would have to be conducted as part of the quality control process, as well as for type certification. It should be pointed out that tests are already required to establish the quality of interior materials. The FAA anticipates no significant increase in the amount of testing necessary to establish the quality of the manufactured materials, although it concedes that some quality testing may be of a more sophisticated and thus more costly nature. The regulatory analysis for this rulemaking has been updated to consider these comments and other information provided by the various commenters.

Some commenters believe that additional full-scale tests should be conducted to verify that the new flammability standards are appropriate. The FAA does not concur. As stated before, full-scale testing using generic materials has shown the small-scale OSU test procedures to be appropriate in predicting material behavior. There is no reason to believe that the suitability of in-service materials will not correspond to the results provided by the generic materials tested.

Two commenters believe that the two year compliance period for newly manufactured airplanes would be unnecessarily long. One of these suggests that a period of one year would be appropriate. On the other hand, a number of other commenters believe that two years does not allow sufficient time to select new materials, evaluate their feasibility, conduct the necessary qualification tests, develop any new manufacturing processes, and place orders. They note that the normal procurement process requires components to be ordered at least one year prior to the time the airplane for which they are intended is completed. One commenter suggests a compliance period of five years. The FAA considers five years to be excessive but, in view of the above factors, does concur that the proposed two year compliance period might be too short. The FAA believes that the requirement to meet the heat release value of 65 kilowatts per square meter within 2 years imposes a greater burden on the industry than originally expected. The FAA further anticipates that the amount of developmental testing necessary and the need to develop new manufacturing processes makes the two year compliance period unrealistic. The FAA believes a 4 year compliance time is more appropriate to comply with the heat release value of 65 kw/cm^2, but wants to preclude some of the highly flammable materials identified during FAA testing from being installed during that 4-year period. Thus, the final rule contains an interim 2-year period after which interior materials used in newly manufactured or completely replaced interiors must have a heat release value of 100 kilowatts per square meter or less. The FAA choose the 100 kw/cm^2 value because tests show that value eliminates materials which are clearly unacceptable to both the FAA and commenters. The standard provided by this value will prevent the use of these materials during the interim period. These intermediate standards will preclude the use of materials found to be especially flammable, such as acrylonitrile-butadiene-styrene (ABS) and polycarbonate. The intermediate standards will result in an early incremental increase in safety and will prevent any degradation in the present level of safety due to increased use of these materials.

As proposed, all large airplanes type certificated after January 1, 1958, and operated under the provisions of Part 121 or 135 would have to be modified to use materials that meet the new flammability standards the first time the cabin interior is replaced after a date 4 years from the effective date of the amendment. The selection, qualification and procurement processes for operators are essentially the same as those for manufacturers of new airplanes. An interim period of 2 years with intermediate standards has also been imposed for the reasons cited above with respect to newly manufactured airplanes. (As also noted above, the requirement will apply to airplanes with passenger capacities greater than 19, rather than all "large airplanes".)

Several commenters request clarification of the expression "upon the first replacement of the cabin interior", as used in proposed § 121.312(a) (2) and (3). As discussed in Notice 85–10, the replacement of individual panels on a piece-meal basis would not significantly increase the level of safety and might result in parts incompatibility. The intent of this expression is, therefore, to require the use of the new materials whenever there is a substantially complete replacement of the interior materials that are subject to the new flammability standards. Whether other interior items, such as seats, flooring, etc., are replaced or retained is not relevant to a determination that interior materials meeting the new flammability standards must be used. The term "substantially" is used to ensure that materials meeting the new flammability standards are used when minor components not significant to the overall interior flammability are retained. Refurbishment of interior components by replacing the decorative finish would not constitute "replacement" provided the refurbished components are reinstalled in the same airplane. On the other hand, components removed from one airplane, refurbished and installed in another airplane on a rotational basis would have to meet the new flammability standards. Paragraphs 121.312(a) (2) and (3) have been reworded to clarify their applicability.

Two commenters believe that the interior materials should meet the new flammability standards within five years after the effective date regardless of whether they are replaced for other reasons. A mandatory retrofit was not proposed for the reasons cited in Notice 85–10.

As proposed in Notice 85–10, all larger interior surface materials installed above the floor in compartments occupied by the crew or passengers would have to meet the new flammability standards. This would include sidewalls, ceilings, bins and partitions, galley structures, and any coverings on these surfaces, but would not include smaller items, i.e., windows, window shades or curtains. Several commenters offer views or request clarification as to the interior materials that would have to meet the new standards. In particular, commenters

question whether the new standards would apply to complex door moldings and clear or translucent plastic components, e.g., light lenses in ceiling panels, other light lenses, and window anti-scratch panels. One commenter notes that materials used in sidewalls and panels at low level wear areas should be exempted. The commenter asserts that requiring such materials to meet the new standards would provide little benefit and cause considerable cost. Similarly, another commenter believes that the exclusion of some low-priced, high wear parts could significantly reduce the cost impact of the regulation without reducing the resultant benefits. Other commenters believe that materials used in internal galley structure and those used in the internal construction of stowage compartments should be exempted because such materials would not be exposed to direct flame impingement. On the other hand, one commenter believes that the new standards should apply to passenger service units. Another believes that they should apply to curtains and shades.

The primary purpose of the new flammability standards is to ensure that interior materials with large outer surface areas will not become involved rapidly and contribute to a fire when exposed to flames. The internal structure of galleys and storage bins need not meet the proposed standards because such structure would not be exposed to an external flame until well after flashover occurs and further egress is unlikely. The new flammability standards do not apply to transparent or translucent components such as lenses used in interior lights and illuminated signs, and window anti-scratch panels, because of the lack of materials which will meet the flammability standards and still have the light transmissibility characteristics which are vital in emergency situations. Because of their relatively small volume and surface area, small parts (e.g. door and window moldings, seat trays, arm rests, etc.), need not meet the new flammability standards. For the same reason, small detail parts of the passenger service units need not meet the new standards. Any large surface areas of passenger service units that comprise the undersides of the overhead storage bins would, however, have to meet the new flammability standards because they could contribute significantly to a fire. The FAA does not concur that requiring materials used in sidewalls and panels at low level in high wear areas to meet these standards would provide little benefit and cause considerable cost. During the full-scale testing, it was found that there is very little involvement of flooring until after flashover. This is not true, however, of side panels and partitions, even the portions near the floor. While some of the materials that are traditionally used for high wear areas might not meet the new flammability standards, there are other available materials that are feasible for this purpose. Section 25.853(a–1) has been reworded to clarify the applicability of the new flammability standards.

While the comment that curtains and shades should have been included goes beyond the scope of the notice, it is noted that curtains and shades were not included in the proposed rulemaking because no materials meeting the new standards were considered feasible for such use.

As announced in Notice 85–10A, the FAA has recommended that the heat release rate be measured by the thermopile method alone. Due to conflicting test results, several commenters also express the belief that only one method should be used. Two believe that the oxygen depletion method is superior to the thermopile method; however, most support the FAA. The two series of tests conducted by the industry trade association and the FAA have shown that the thermopile and oxygen depletion methods provide consistent results. The thermopile is an integral part of the OSU test apparatus, while the oxygen depletion method would require additional expenditure for added test equipment. The thermopile is, therefore, adopted as the sole method of measuring the rate of heat release.

Several commenters note discrepancies and typographical errors concerning the oxygen depletion method. As only the thermopile method will be used, these comments are no longer relevant.

One commenter believes that the radiant heat flux of 3.5 W/cm^2, is too low, while another expresses the opposite view. A third commenter speculates that testing with one heat flux level does not seem to be sufficient for characterization of burning behavior. As noted above, the two series of tests conducted jointly by the FAA and members of the industry trade association showed that the correlation with the full-scale tests was much better and the results were more consistent with 3.5 W/cm^2. Testing with more than one heat flux level is not considered appropriate because the results of tests conducted at one level would not be consistent with those obtained at another level. In view of the above, a radiant heat flux of 3.5 W/cm^2 is adopted in lieu of 5.0 W/cm^2.

One commenter believes that an independent group, such as the Center for Fire Research at the National Bureau of Standards, should review this matter to determine whether the recommended changes are warranted. The FAA does not concur because the recommendations are based on sound test results, and an independent review would unduly delay introduction of improved materials in service.

Several commenters express their concern that testing specimens in a vertical position is not adequate for materials that melt and drip, i.e., theromplastics and thermoplastic composites. Based on their experience in testing such materials, the FAA Technical Center recommended the use of a wire mesh to hold the specimen in place and a drip pan to collect molten material. As noted above, the recommendations of the Technical Center have been adopted; therefore, no further difficulties in this regard are anticipated.

Two commenters note that the OSU test apparatus, as described by ASTM–E–906, is still a research tool and should not be used as a means of regulatory compliance. One of the two notes that it is restricted by ASTM to use in research and development because no data were presented to show a correlation between small-scale and large-scale tests. While such correlation may not have existed at the time ASTM standardized and adopted the OSU test apparatus, adequate correlation has been provided by the tests conducted by the FAA. The FAA, therefore, does not concur with the commenters in this regard.

One commenter suggests basing the flammability standards on qualification of base materials rather than by qualification of completed components so that the cost of interiors installed and approved by supplemental type certificates, i.e., those installed by modifiers as opposed to those installed by the original airplane manufacturer, would be minimized. The two series of tests conducted jointly by the FAA and members of the industry trade association have shown that design features, i.e., the decorative finish, have a very significant effect on the flammability characteristics of a component. While a means might be developed in the future to extrapolate the results of testing the base material to the completed component, there is presently no assurance that the completed component meets the flammability standards unless the

component itself is tested. Also, there is no justification for allowing the flammability standards for interiors installed by an airplane modifier to be lower than those required for the original manufacturer of the airplane.

Several commenters note deficiencies in the figures that describe the test apparatus, particularly Figure 1. The figures have been revised to correct these deficiencies and to reflect other changes believed necessary by the FAA. Other commenters note typographical errors in the text of the proposed rulemaking which have been corrected.

One commenter notes that the fuel used in testing interior materials is not kerosene as in a post-crash fire and as specified for seat cushion testing. The test fuel is not part of the testing, per se. It is merely a fuel with a standard heat value that is used to calibrate the test apparatus. The radiant heat used during the actual testing is generated electrically. The test fuel was specified as "methane or natural gas having 90 percent or more methane" in Notice 85-10. In order to improve consistency of test results, the test fuel is specified as "at least 99 percent methane" in the final rule.

One commenter inquires as to whether the FAA had performed a comparison of materials which meet European Standard ATS 1000 with those that meet the standards proposed in Notice 85-10. The FAA has not made a direct comparison of materials. It is noted, however, that ATS 1000 consists essentially of a vertical Bunsen burner test, a smoke emission test similar to that proposed by the FAA in Notice 75-3 (40 FR 6505; February 12, 1975) and later withdrawn, and a measurement of toxic gas emissions. ATS 1000 would, therefore, provide no assurance that a material would meet the flammability standards proposed in Notice 85-10.

One commenter notes that ASTM E-906 defines the upper and lower pilot burners as alternatives representing nonimpinging and impinging ignition sources, respectively, and inquires as to why simultaneous exposure to both burners was proposed in Notice 85-10. Exposure to both burners was proposed because the testing conducted by the FAA Technical Center showed that test results are more reproducible when both burners are used.

Several commenters note problems in burner construction and adjustment. These problems were corrected by changes recommended by the FAA Technical Center and adopted in this final rule.

Since the time Notice 85-10 was issued, existing Appendix F of Part 25 has been reidentified as Appendix F, Part I, the new standards for flammability of seat cushions have been adopted as Appendix F, Part II (Amendment 25-59; 49 FR 43188; October 26, 1984), and standards for cargo or baggage compartments have been adopted as Appendix F, Part III (Amendment No. 25-60; 51 FR 18236; 5-16-86). The new standards for flammability of interior materials are, therefore, reidentified as Appendix F, Part IV. Other nonsubstantive conforming editorial changes have also been made.

Additional Round-Robin Testing

Since the opening of the comment period some commenters have expressed concerns regarding the repeatability of the FAA OSU test apparatus and procedures. The FAA plans to conduct a third series of round-robin tests in August, 1986. The FAA is confident that the final series of round-robin tests will simply reconfirm that any apparent disparity between laboratories is primarily a function of inconsistent calibration.

Nevertheless, the third round-robin is expected to be completed in August, and the test data will be placed in the docket within 30 days of completion of the tests. If the tests do in fact reveal that changes in the final rule are necessary, we will publish an appropriate notice in the **Federal Register** within 60 days of completion of the testing.

Request for Comments

As stated before, the FAA believes that the results of its research and the second series of round-robin tests clearly demonstrate the efficiency of this amendment. Very late in the regulatory process the FAA received a comment indicating that the two industry organizations involved in the round-robin testing had identified a better test procedure to discriminate materials. No data was presented to give the FAA confidence that a suggested test procedure was either attainable or correlatable with past FAA full-scale testing. The FAA knows of no other tests which presently show promise of correlation and is skeptical at this point because the SAFER panel of experts (which contained representative from the above-discussed industry organizations) recommended the OSU apparatus and the FAA evaluated several other possible test procedures before selecting the OSU tests. Nevertheless, based upon this comment and an apparent feeling by most of the commenters that the FAA is moving too rapidly in this rulemaking, the FAA is requesting further comments on both the test procedure and the appropriateness of the 65 kilowatts per square meter performance criteria.

FAA does not believe the comments received to date warrant abandoning the rulemaking or delaying it further. Based upon results of completed research, the FAA believes that it is time to implement attainable increases in fire safety in transport airplanes. Thus, the FAA has moved to final action on Notices 85-10 and 85-10A. The FAA will review all additional comments submitted and, within 1 year after publication of this amendment in the **Federal Register**, will publish a document discussing all comments, presenting FAA findings based upon the comments, and proposing any necessary revisions to the requirements contained herein. Comments submitted to Docket Number 24594 within 6 months after the publication of this rule in the **Federal Register** will be considered. Procedures identified in Notices 85-10 andf 85-10A for filing comments should be followed. Comments should be accompanied by test results as appropriate and commenters should address the cost impact of all suggested revisions to the standards.

Regulatory Evaluation

I. Cost Benefit Analysis

The analysis reviews amendments to Parts 25 and 121 which would upgrade the fire safety standards for materials used in the cabin interiors of transport category airplanes with passenger capacities of 20 or more. Such airplanes will have to use materials which meet the new standards if application for type certificate is made after the effective date of the amendment. In addition, other such airplanes used in air carrier service will have to use materials which meet the new standards if they are newly manufactured after a specified date, or for those type certificated after January 1, 1958, if the cabin interior is replaced after a specified date.

The amendments result from FAA efforts recommended by the FAA sponsored Special Aviation Fire and Explosion Reduction (SAFER) Advisory Committee. The rule addresses flammability considerations of cabin materials by an improved flammability test.

Compliance with this rule is possible within the current state-of-the-art in cabin materials. The cabin interior components covered are ceiling and wall panels (other than lighting lenses), partitions, and the outer surfaces of galleys, large cabinets and stowage compartments (other than underseat stowage compartments and

compartments for stowing small items, such as magazines and maps).

The test procedures used for showing compliance with the new standards are relatively simple. Although the OSU test apparatus is more costly than the Bunsen burner used for showing compliance with the current standards, the cost is minimal when compared with the overall cost of type certification testing for the airplane. Information available to the FAA indicates that the materials used in specific components do not change frequently over the production life of an airplane so that any future cost for type certification testing is incurred infrequently.

The tests already conducted indicate that a number of materials presently used comply with the new standards. Furthermore, these materials cost basically the same as other materials used today, which do not meet the new standards. In view of the established compliance periods, there are no apparent difficulties in substituting these materials for components which fail to meet the new standards. There is no cost associated with switching over manufacturing processes to use these materials in lieu of those which fail to meet the new standards. Some manufacturers may elect to use newly developed materials which do involve new manufacturing processes; however, the additional costs of manufacturing with these new processes are expected to be minimal when compared to the overall cost of manufacturing the components used in cabin interiors.

In light of comments received and other information that was not available at the time Notice 85-10 was issued, the FAA now considers the preliminary estimate of the cost of meeting the new standards to be too low. The discounted costs are now expected to range between $2.32 million and $2.72 million (mid-point of $2.52) for design, engineering and certification testing to assure compliance for a specific group of panel materials. These are non-recurring costs, and costs after the six years following the effective date of the amendments are expected to be negligible.

The benefits from these amendments result from the increased likelihood of surviving an in-flight cabin fire or a crash which involves a post-crash fire. The improved flammability standards will provide an additional increment of time for passengers trapped in a burning airplane to escape. This, in turn, will allow more passengers to survive in a given situation. The benefits of these amendments are in addition to those resulting from the improved seat cushion standards contained in Amendments 25-59 and 121-184 because of the additional survival time increment gained and resultant additional lives saved. Unlike the costs, which will be incurred largely over the first four years, the benefits will not start until the fourth year and will increase gradually thereafter as airplanes with new materials are phased into service.

The National Bureau of Standards (NBS), on FAA's behalf, recently conducted an extensive review of all commercial accidents worldwide in which fire was a factor in fatalities. While the NBS study dealt primarily with standards for seat cushions, the conclusions reached with respect to escape time and survivability are equally applicable to these proposals. A copy of the NBS study, Report No. DOT/FAA/CT-84/8, entitled "Decision Analysis Model for Passenger-Aircraft Fire Safety with Application to Fire-Blocking of Seats" and dated April 1984, has been placed in the Rules Docket and is available for public inspection. Based on the results of the NBS study and a monetized value of $650,000 per life, the FAA estimates that the cumulative difference in lives saved and damage reduced by the year 2000 will amount to a discounted benefit of approximately $6.3 million. These benefits are discounted to a present value using a ten percent discount rate. The benefit to cost ratio is, therefore, approximately 2.5 to 1.

The complete economic analysis for these amendments has been placed in the Rules Docket and is available for public inspection.

II. Regulatory Flexibility Act Determination

A Final Regulatory Flexibility was made in compliance with the Regulatory Flexibility Act. The conclusion in the initial regulatory evaluation, that the amendments would not result in a significant economic impact for a substantial number of small entities, is not altered by the present evaluation.

III. International Trade Assessment

These amendments will have little or no impact on trade opportunities for both U.S. firms doing business overseas and foreign firms doing business in the U.S. The amendments affect the rules for certificating new airplanes. Also, newly manufactured airplanes for the U.S. market, whether made by U.S. or foreign manufacturer, will have to comply with the rules. Any cost of compliance is negligible, however, when compared to the cost of designing and testing a new airplane.

Conclusion: For the reasons discussed earlier in the preamble, the FAA has determined that this regulation is not considered to be major under Executive Order 12291. The FAA has determined that this action is significant under DOT Regulatory Policies and Procedures (44 FR 11034; February 26, 1979). In addition, the FAA certifies that this rule does not have a significant economic effect on a substantial number of small entities under the criteria of the Regulatory Flexibility Act, since none would be affected. A regulatory evaluation of this action, including a Regulatory Flexibility Determination and a Trade Impact Assessment, has been prepared for this regulation and has been placed in the docket. A copy of this evaluation may be obtained by contacting the person identified under the caption **"FOR FURTHER INFORMATION CONTACT."**

List of Subjects

14 CFR Part 25

Air transportation, Aircraft, Aviation safety, Safety.

14 CFR Part 121

Aviation safety, Safety, Air carriers, Air transportation, Aircraft, Airplanes, Flammable materials, Transportation, Common carriers.

Adoption of the Amendment

Accordingly, Parts 25 and 121 of the Federal Aviation Regulations (FAR), 14 CFR Parts 25 and 121 are amended as follows:

PART 25—AIRWORTHINESS STANDARDS: TRANSPORT CATEGORY AIRPLANES

1. The authority citation for Part 25 continues to read as follows:

Authority: 49 U.S.C. 1344, 1354(a), 1355, 1421, 1423, 1424, 1425, 1428, 1429, 1430; 49 U.S.C. 106(g) (Revised Pub. L. 97-449, January 12, 1983).

2. By amending § 25.853, by adding a new paragraph (a-1).

§ 25.853 Compartment interiors.

* * * * *

(a-1) For airplanes with passenger capacity of 20 or more, interior ceiling and wall panels (other than lighting lenses), partitions, and the outer surfaces of galleys, large cabinets and stowage compartments (other than underseat stowage compartments and compartments for stowing small items, such as magazines and maps) must also meet the test requirements of Part IV of Appendix F of this Part, or other approved equivalent method, in addition to the flammability requirements

prescribed in paragraph (a) of this section.

* * * * *

3. By amending Appendix F by adding a new Part IV to read as follows:

Appendix F to Part 25

* * * * *

Part IV. *Test Method to Determine the Heat Release Rate From Cabin Materials Exposed to Radiant Heat.*

(a) *Summary of Method.* The specimen to be tested is injected into an environmental chamber through which a constant flow of air passes. The specimen's exposure is determined by a radiant heat source adjusted to produce the desired total heat flux on the specimen of 3.5 W/cm², using a calibrated calorimeter. The specimen is tested so that the exposed surface is vertical. Combustion is initiated by piloted ignition. The combustion products leaving the chamber are monitored in order to calculate the release rate of heat.

(b) *Apparatus.* The Ohio State University (OSU) rate of heat release apparatus, as described below, is used. This is a modified version of the rate of heat release apparatus standardized by the American Society of Testing and Materials (ASTM), ASTM E-906.

(1) This apparatus is shown in Figure 1. All exterior surfaces of the apparatus, except the holding chamber, shall be insulated with 25 mm thick, low density, high-temperature, fiberglass board insulation. A gasketed door through which the sample injection rod slides forms an airtight closure on the specimen hold chamber.

(2) *Thermopile.* The temperature difference between the air entering the environmental chamber and that leaving is monitored by a thermopile having three hot and three cold, 32 gauge Chromel-Alumel junctions. The hot junctions are spaced across the top of the exhaust stack. Two hot junctions are located 25 mm from each side on diagonally opposite corners, and the third in the center of the chimney's cross-section 10 mm below the top of the chimney. The cold junctions are located in the pan below the lower air distribution plate (see paragraph (b)(4)).

(i) *Thermal Inertia Compensator.* A compensator tab is made from 0.55 mm stainless steel sheet, 10 by 20 mm. An 800 mm length of 24 gauge Chromel-Alumel, glass insulated, duplex thermocouple wire is welded or silver soldered to the tab as shown in Figure 2, and the wire bent back so that it is flush against the metal surface.

(ii) The compensator tab must be mounted on the exhaust stack as shown in Figure 3 using a 6-32 round head machine screw, 12 mm long. Add small (approximately 4.5 mm O.D., 9 mm O.D.) washers between the head of the machine screw and the compensator tab to give the best response to a square wave input. (One or two washers should be adequate.) The "sharpness" of the square wave can be increased by changing the ratio of the output from the thermopile and compensator thermocouple which is fed to the recorder. The ratio is changed by adjusting the 1-K ohm variable resistor (R_1) of the thermopile bleeder shown in Figure 4. When adjusting compensation, keep R_1 as small as possible. Adjustment of the compensator must be made during calibration (see paragraph (c)(1)) at a heat release rate of 7.0 plus or minus 0.5 kW.

(iii) Adjust the washers and the variable resistor (R_1) so that 90 percent of full scale response is obtained in 8 to 10 seconds. There must be no overshoot, as shown in Figure 5A. If an insufficient number of washers is added, or R_1 is too small, the output with square wave input will look like Figure 5B; if too many washers are added and R_1 is too large, the output will look like Figure 5A.

(iv) Subtract the output of the compensator from the thermopile. The junctions enclosed in the dotted circle of Figure 4 are kept at the same constant temperature by electrically insulating the junctions and placing them on the pipe carrying air to the manifold, then covering them and the pipe with thermal insulation.

(v) Thermopile hot junctions must be cleared of soot deposits on a daily basis during periods of testing.

(3) *Radiation Source.* A radiant heat source for generating a flux up to 100 kW/m², using four silicon carbide elements, Type LL, 20 inches (50.8 cm) long by ⅝ inch (1.54 cm) O.D., nominal resistance 1.4 ohms, is shown in Figures 6A and 6B. The silicon carbide elements are mounted in the stainless steel panel box by inserting them through 15.9 mm holes in 0.8 mm thick ceramic fiber board. Location of the holes in the pads and stainless steel cover plates are shown in Figure 6B. The diamond shaped mask of 24 gauge stainless steel is added to provide uniform heat flux over the area occupied by the 150 by 150 mm vertical sample. A power supply of 12.5 kVA, adjustable from 0 to 270 volts, is required.

(4) *Air Distribution System.* The air entering the environmental chamber is distributed by a 6.3 mm thick aluminum plate having eight, No. 4 drill holes, 51 mm from sides on 102 mm centers, mounted at the base of the environmental chamber. A second plate of 18 gauge steel having 120, evenly spaced, No. 28 drill holes is mounted 150 mm above the aluminum plate. A well-regulated air supply is required. The air supply manifold at the base of the pyramidal section has 48, evenly spaced, No. 26 drill holes located 10 mm from the inner edge of the manifold so that 0.03 m³/second of air flows between the pyramidal sections and 0.01 m³/second flows through the environmental chamber when total air flow to apparatus is controlled at 0.04 m³/second.

(5) *Exhaust Stack.* An exhaust stack, 133 mm by 70 mm in cross section, and 254 mm long, fabricated from 28 gauge stainless steel, is mounted on the outlet of the pyramidal section. A 25 mm by 76 mm plate of 31 gauge stainless steel is centered inside the stack, perpendicular to the air flow, 75 mm above the base of the stack.

(6) *Specimen Holders.* The 150 mm × 150 mm specimen is tested in a vertical orientation. The holder (Figure 7) is provided with a specimen holder frame, which touches the specimen (which is wrapped with aluminum foil as required by paragraph (d)(3) of this Part) along only the 10 mm perimeter, and a "V" shaped spring to hold the assembly together. A detachable 12 mm × 12 mm × 150 mm drip pan is also provided for testing of materials prone to melting and dripping. The positioning of the spring and frame may be changed to accommodate different specimen thicknesses by inserting the retaining rod in different holes on the specimen holder.

Since the radiation shield described in ASTM E-906 is not used, a guide pin is added to the injection mechanism. This fits into a slotted metal plate on the injection mechanism outside of the holding chamber and can be used to provide accurate positioning of the specimen face after injection. The front surface of the specimen shall be 100 mm from the closed radiation doors after injection.

The specimen holder clips onto the mounted bracket (Figure 7). The mounting bracket is attached to the injection rod by three screws which pass through a wide area washer welded onto a ½ inch nut. The end of the injection rod is threaded to screw into the nut and a .020 inch thick wide area washer is held between two ½ inch nuts which are adjusted to tightly cover the hole in the radiation doors through which the injection rod or calibration calorimeter pass.

(7) *Radiometers.* A total-flux flush (calorimeter) mounted in the center of a ½ inch Kaowool "M" board inserted in the sample holder must be used to measure the total heat flux. The total-flux calorimeter must have a view angle of 180 degrees and be calibrated for incident flux. The calorimeter calibration must be acceptable to the Administrator.

(8) *Pilot-Flame Positions.* Pilot ignition of the specimen must be accomplished by simultaneously exposing the specimen to a lower pilot burner and an upper pilot burner, as described in paragraph (b)(8)(i) and (b)(8)(ii), respectively.

(i) *Lower Pilot Burner.* The pilot-flame tubing must be 6.3 mm O.D., 0.8 mm wall, stainless steel tubing. A mixture of 120 cm³/min. of methane and 850 cm³/min. of air must be fed to the lower pilot flame burner. The normal position of the end of the pilot burner tubing is 10 mm from and perpendicular to the exposed vertical surface of the specimen. The centerline at the outlet of the burner tubing must intersect the vertical centerline of the sample at a point 5 mm above the lower edge of the specimen.

(ii) *Upper Pilot Burner.* The pilot burner must be a straight length of 6.3 mm O.D., 0.8 mm wall, stainless steel tubing that is 360 mm long. One end of the tubing shall be closed, and three No. 40 drill holes shall be drilled into the tubing, 60 mm apart, for gas ports, all radiating in the same direction. The first hole must be 5 mm from the closed end of the tubing. The tube is inserted into the environmental chamber through a 6.6 mm hole drilled 10 mm above the upper edge of the window frame. The tube is supported and positioned by an adjustable "Z" shaped support mounted outside the environmental chamber, above the viewing window. The tube is positioned above and 20 mm behind the exposed upper edge of the specimen. The middle hole must be in the vertical plane perpendicular to the exposed surface of the specimen which passes through its vertical centerline and must be pointed toward the radiation source. The gas supplied to the

burner must be methane adjusted to produce flame lengths of 25 mm.

(c) *Calibration of Equipment.*—(1) *Heat Release Rate.* A burner as shown in Figure 8 must be placed over the end of the lower pilot flame tubing using a gas tight connection. The flow of gas to the pilot flame must be at least 99 percent methane and must be accurately metered. Prior to usage, the wet test meter is properly leveled and filled with distilled water to the tip of the internal pointer while no gas is flowing. Ambient temperature and pressure of the water, are based on the internal wet test meter temperature. A baseline flow rate of approximately 1 liter/min is set and increased to higher preset flows of 2, 4, 6 and 8 liters/min. The rate is determined by using a stopwatch to time a complete revolution of the wet test meter for both the baseline and higher flow, with the flow returned to baseline before changing to the next higher flow. The thermopile baseline voltage is measured. The gas flow to the burner must be increased to the higher preset flow and allowed to burn for 4.0 minutes, and the thermopile voltage must be measured. The sequence is repeated until all four values have been determined. The average of the four values must be used as the calibration factor. The procedure must be repeated if the percent relative standard deviation is greater than 5 percent. Calculations are shown in paragraph (f).

(2) *Flux Uniformity.* Uniformity of flux over the specimen must be checked periodically and after each heating element change to determine if it is within acceptable limits of plus or minus 5 percent.

(d) *Sample Preparation.*

(1) The standard size for vertically mounted specimens is 150 × 150 mm for exposed surface with thickness up to 100 mm.

(2) *Conditioning.* Specimens must be conditioned as described in Part 1 of this appendix.

(3) *Mounting.* Only one surface of a specimen will be exposed during a test. A single layer of 0.025 mm aluminum foil is wrapped tightly on all unexposed sides.

(e) *Procedure.* (1) The power supply to the radiant panel is set to produce a radiant flux of 3.5 W/cm². The flux is measured at the point which the center of the specimen surface will occupy when positioned for test. The radiant flux is measured after the air flow through the equipment is adjusted to the desired rate. The sample should be tested in its end use thickness.

(2) The pilot flames are lighted and their position, as described in paragraph (b)(8), is checked.

(3) The air flow to the equipment is set at 0.04 plus or minus 0.001 m³/s at atmospheric pressure. Proper air flow may be set and monitored by either: (1) An orfice meter designed to produce a pressure drop of at least 200 mm of the manometric fluid, or by (2) a rotometer (varable orfice meter) with a scale capable of being read to plus or minus 0.0004 m³/s. The stop on the vertical specimen holder rod is adjusted so that the exposed surface of the specimen is positioned 100 mm from the entrance when injected into the environmental chamber.

(4) The specimen is placed in the hold chamber with the radiation doors closed. The airtight outer door is secured, and the recording devices are started. The specimen must be retained in the hold chamber for 60 seconds, plus or minus 10 seconds, before injection. The thermopile "zero" value is determined during the last 20 seconds of the hold period.

(5) When the specimen is to be injected, the radiation doors are opened, the specimen is injected into the environmental chamber, and the radiation doors are closed behind the specimen.

(6) A negative heat release will occur due to heat absorption by the cold specimen holder. Data-acquisition devices must have the capability of following these negative outputs and correcting the sample burn with a "blank" test result.

(7) Injection of the specimen marks time zero. A continuous record of the thermopile output must be made during the time the specimen is in the environmental chamber.

(8) The test duration time is five minutes.

(9) A minimum of three specimens must be tested.

(f) *Calculations.* (1) The calibration factor is calculated as follows:

$$K_h = \frac{(F_1 - F_0)}{(V_1 - V_0)} \times \frac{(210.8 - 22)k_{cal}}{\text{mole}} \times \frac{273}{Ta} \times \frac{P - p_v}{760} \times \frac{\text{mole CH4STP}}{22.41} \times \frac{\text{WATT.min}}{.01433\text{kcal}} \times \frac{}{1000\text{w}} \text{ kw}$$

F_0 = flow of methane at baseline (1pm)
F_1 = higher preset flow of methane (1pm)
V_0 = thermopile voltage at baseline (mv)
V_1 = thermopile voltage at higher flow (mv)
T_a = Ambient temperature (K)
P = Ambient pressure (mm Hg)
P_v = Water vapor pressure (mm Hg)

(2) Heat release rates may be calculated from the reading of the thermopile output voltage at any instant of time as

$$HRR = \frac{(V_m - V_b)}{.02323 \text{ m}^2} \times K_h$$

HRR = Heat release Rate kw/m²
V_m = measured thermopile voltage (mv)
V_b = "Blank" thermopile voltage
K_h = Calibration Factor (Kw/mv)

V_b is the "blank" test obtained by a run conducted with an empty sample holder assembly. See paragraph (7) above.

(3) The integral of the heat release rate is the total heat release as a function of time and is calculated by multiplying the rate by the data sampling frequency in minutes and summing the time from zero to two minutes.

(g) *Criteria.* The total positive heat release over the first two minutes of exposure for each of the three or more samples tested must be averaged, and the peak heat release rate for each of the samples must be averaged. The average total heat release must not exceed 65 kilowatt-minutes per square meter, and the average peak heat release rate must not exceed 65 kilowatts per square meter.

(h) *Report.* The test report must include the following for each specimen tested:

(1) Description of the specimen.

(2) Radiant heat flux to the specimen, expressed in W/cm².

(3) Data giving release rates of heat (in kW/m²) as a function of time, either graphically or tabulated at intervals no greater than 10 seconds. The calibration factor (k_n) must be recorded.

(4) If melting, sagging, delaminating, or other behavior that affects the exposed surface area or the mode of burning occurs, these behaviors must be reported, together with the time at which such behaviors were observed.

(5) The peak heat release and the 2-minute integrated heat release rate must be reported.

BILLING CODE 4910-13-M

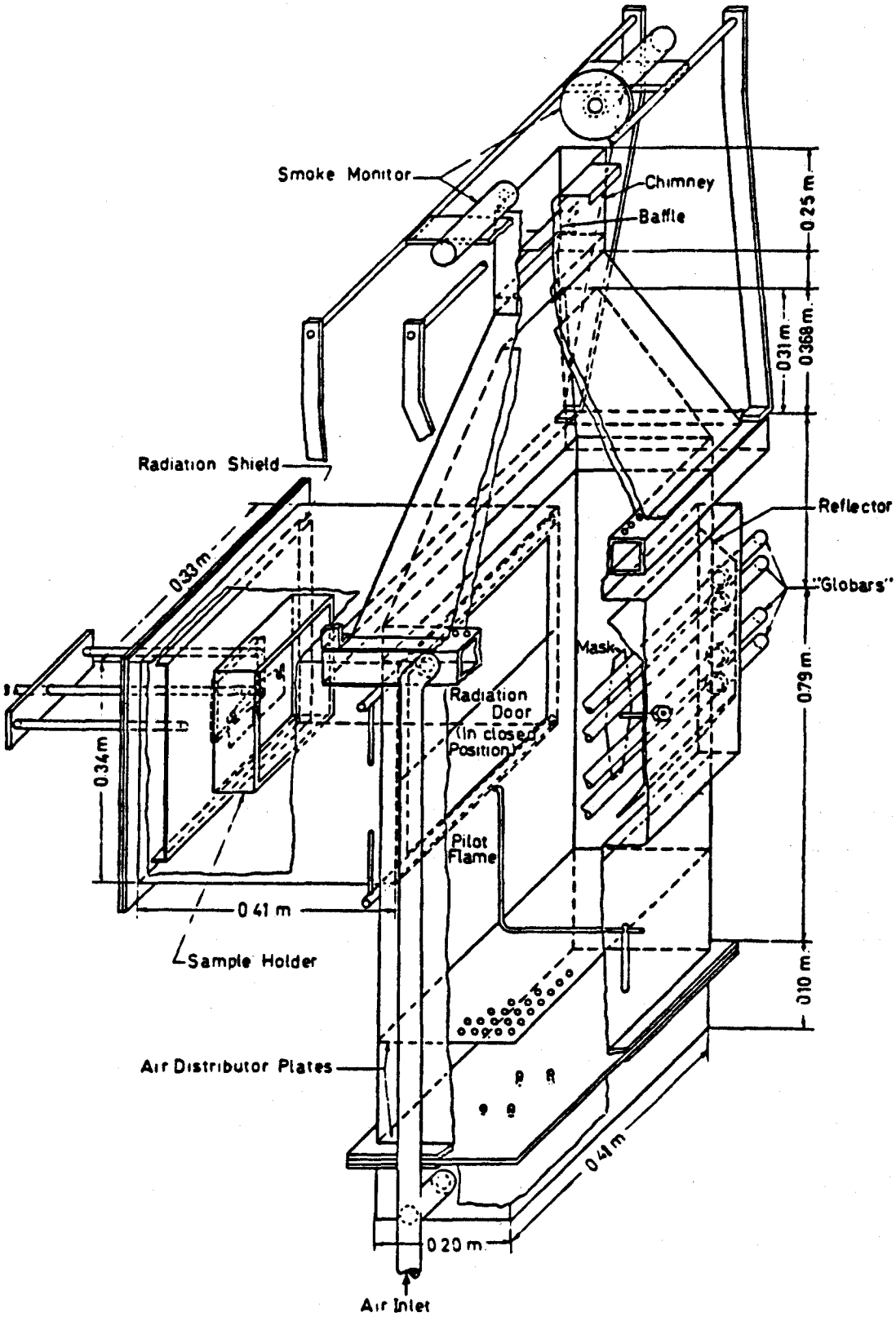

Figure 1. Release Rate Apparatus

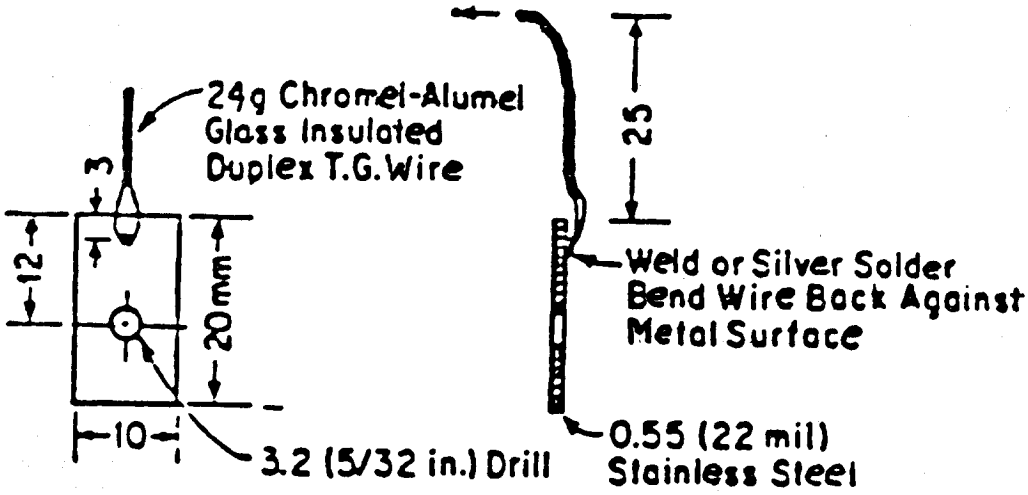

(Unless denoted otherwise, all dimensions are in millimeters.)

Figure 2. Compensator Tab

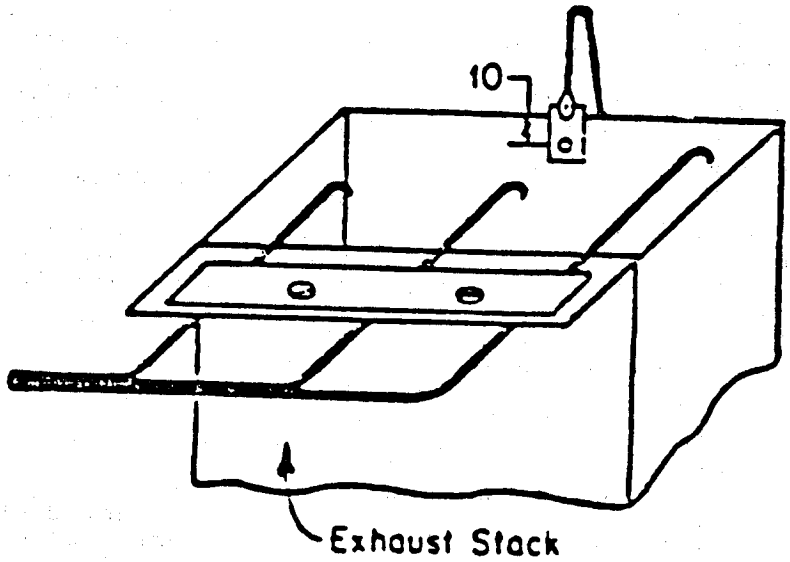

Figure 3. Compensator Tab Mount

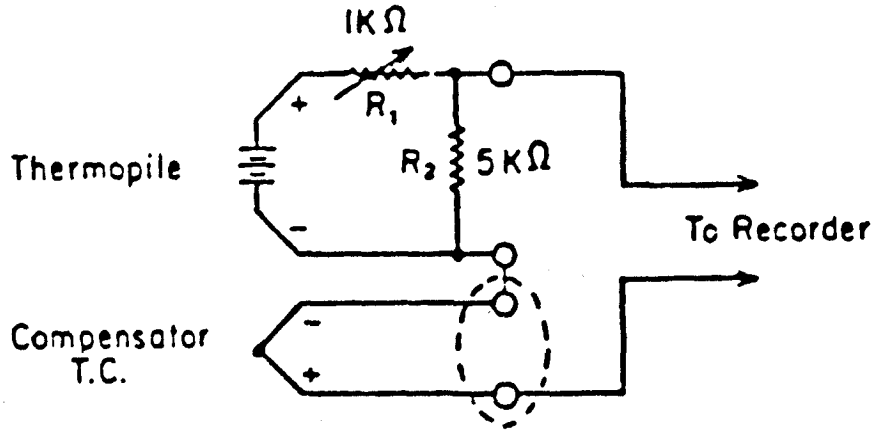

Figure 4. Wiring Diagram

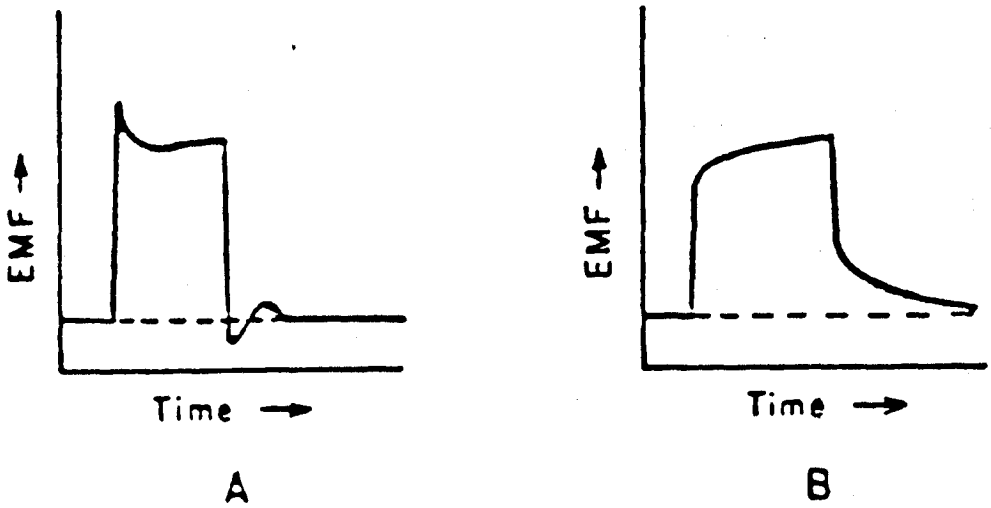

Figure 5. Square Wave Response

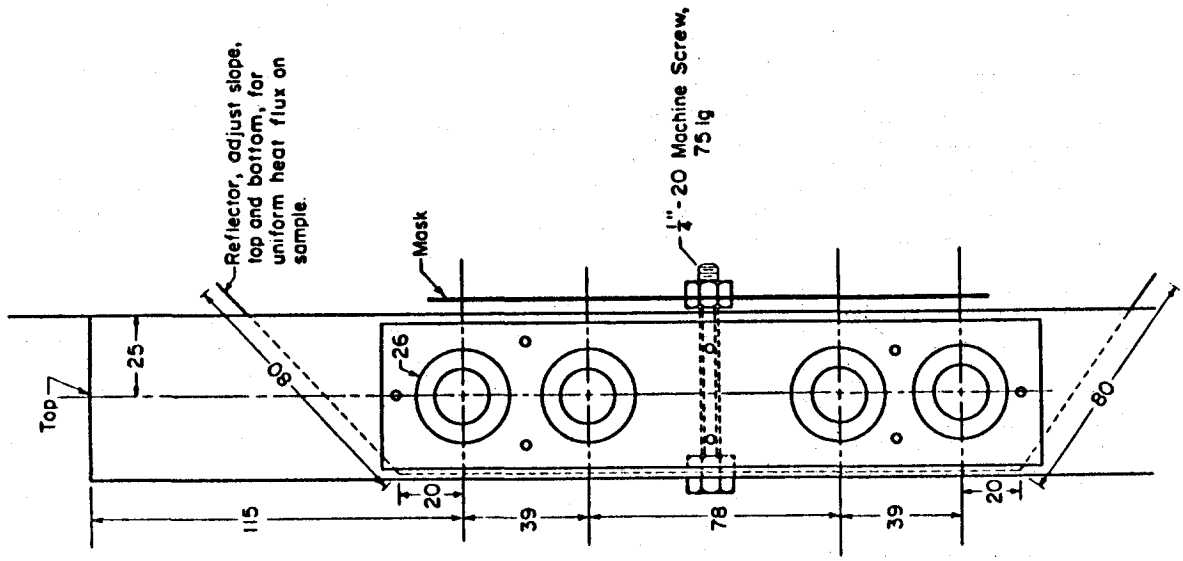

(Unless demonted otherwise, all dimensions are in millimeters.)

Figure 6B. "Globar" Radiant Panel

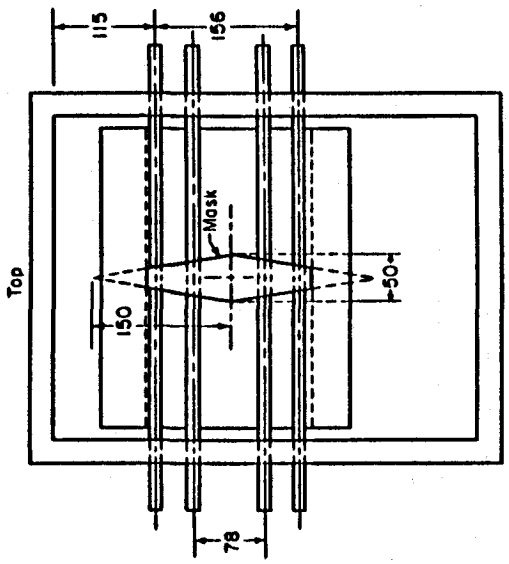

(Unless denoted otherwise, all dimensions are in millimeters.)

Figure 6A. "Globar" Radiant Panel

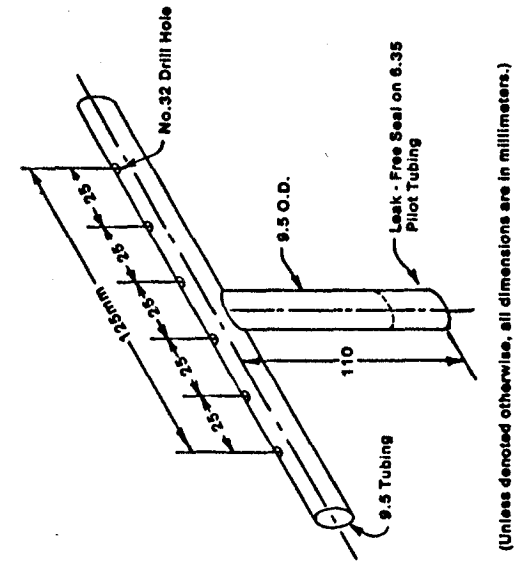

FIGURE 8

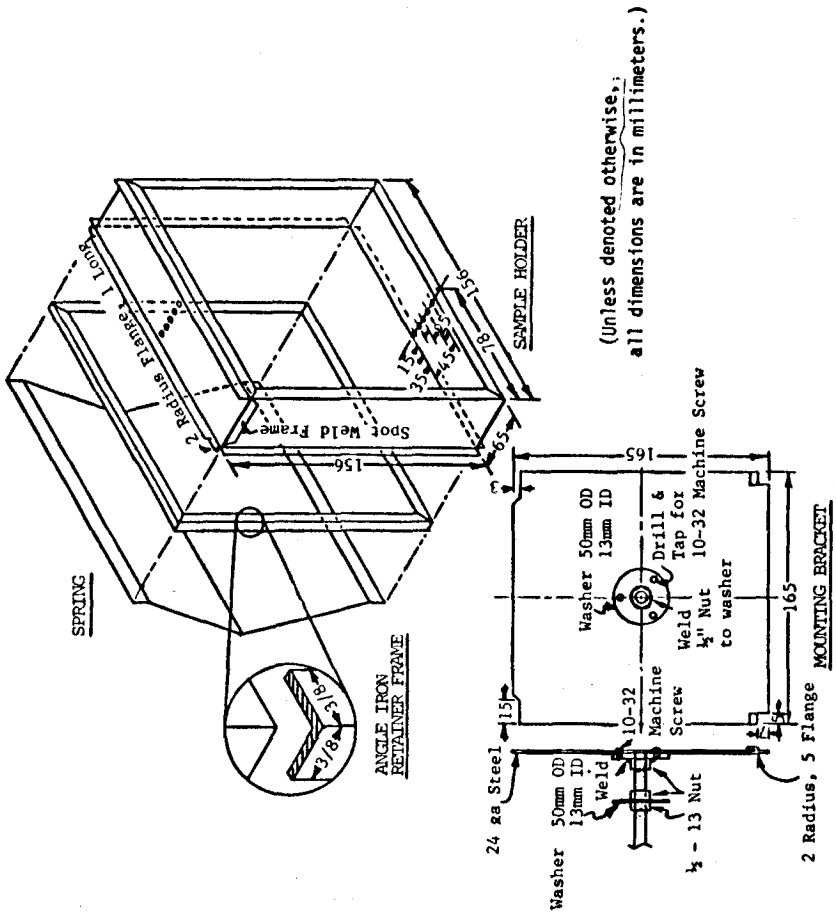

FIGURE 7

BILLING CODE 4910-13-C

PART 121 CERTIFICATION AND OPERATIONS: DOMESTIC, FLAG, AND SUPPLEMENTAL AIR CARRIERS AND COMMERCIAL OPERATORS OF LARGE AIRCRAFT

4. The authority citation for Part 121 continues to read as follows:

Authority: 49 U.S.C. 1354(a), 1355, 1356, 1357, 1401, 1421–1430, 1472, 1485, and 1502; 49 U.S.C. 106(g) (Revised, Pub. L. 97–449, January 12, 1983) 49 CFR 1.47(a).

5. By revising § 121.312(a) to read as follows:

§ 121.312 Materials for compartment interiors.

(a) Except for those materials covered by paragraph (b) of this section, all materials in each compartment used by the crewmembers or passengers must meet the requirements of § 25.853 of this chapter in effect as follows or later amendment thereto:

(1) All airplanes manufactured on or after August 20, 1988, but prior to August 20, 1990 must comply with the provisions of § 25.853 in effect August 20, 1986, except that the total heat release over the first two minutes of sample exposure must not exceed 100 kilowatt-minutes per square meter and the peak heat release rate must not exceed 100 kilowatts per square meter.

(2) All airplanes manufactured on or after August 20, 1990 must comply with the provisions of § 25.853 in effect August 20, 1986.

(3) Upon the first substantially complete replacement of the cabin interior prior to August 20, 1988.

(i) An airplane for which the application for type certificate was filed prior to May 1, 1972, must comply with the provisions of § 25.853 in effect on April 30, 1972;

(ii) An airplane for which the application for type certificate was filed on or after May 1, 1972, must comply with the materials requirements under which the airplane was type certificated.

(4) Upon the first substantially complete replacement of the cabin interior on or after August 20, 1988, airplanes type certificated on or before January 1, 1958, must comply with the provisions of § 25.853 in effect on April 30, 1972.

(5) Upon the first substantially complete replacement of the cabin interior components subject to § 25.853(a–1) on or after August 20, 1988, but prior to August 20, 1990, airplanes type certificated after January 1, 1958, must comply with the provisions of § 25.853 in effect August 20, 1986 except that the total heat release over the first two minutes of sample exposure shall not exceed 100 kilowatt-minutes per square meter, and the peak heat release rate shall not exceed 100 kilowatts per square meter.

(6) Upon the first substantially complete replacement of the cabin interior components identified in § 25.853(a–1) on or after August 20, 1990, airplanes type certificated after January 1, 1958, must comply with the provisions of § 25.853 in effect on August 20, 1986.

* * * * *

Issued in Washington, D.C., on July 10, 1986.

Donald D. Engen,

Administrator.

[FR Doc. 86–16045 Filed 7–18–86; 8:45 am]

BILLING CODE 4910–13–M

DEPARTMENT OF TRANSPORTATION

Federal Aviation Administration

14 CFR Parts 25 and 121

[Docket No. 24594, Amdt., Nos. 25-61 and 121-189]

Improved Flammability Standards for Materials Used in the Interiors of Transport Category Airplane Cabins; Correction

AGENCY: Federal Aviation Administration (FAA), DOT.

ACTION: Final Rule; Request for additional comments; Correction.

SUMMARY: On Monday, July 21, 1986, the Federal Aviation Administration published a Final Rule (51 FR 26206) to upgrade the fire safety standards for cabin interior materials in transport category airplanes. This document is issued to amend the closing date for comments which is incorrect as stated and to correct a formula which appears in the amendatory language.

FOR FURTHER INFORMATION CONTACT: Gary L. Killion, Manager, Regulations Branch (ANM-112), Transport Standards Staff, Aircraft Certification Division, FAA, Northwest Mountain Region, 17900 Pacific Highway South, C-68966, Seattle, WA 98168; Telephone (206) 431-2112.

SUPPLEMENTARY INFORMATION: In FR Doc. 86-16045 beginning on page 26206 in the issue published on July 21, 1986, first column, 36th line from the top should read "**DATES:** Effective Date: August 20, 1986. The closing date for comments is January 21, 1987." At lines 42 and 43, delete the sentence "Comments due on or before September 19, 1986."

At page 26215, the formula in Appendix F to Part 25, Part IV (f) which appears in the center of the page should read as follows:

$$K_h = \frac{(F_1-F_0)}{(V_1-V_0)} \times \frac{(210.8-22)k_{cal}}{mole} \times \frac{273}{T_a} \times \frac{P-P_v}{760} \times \frac{mole\ CH4STP}{22.41} \times \frac{WATT.min}{.01433kcal} \times \frac{kw}{1000w}$$

Issued in Washington, DC, on July 31, 1986.

John H. Cassady,

Assistant Chief Counsel, Regulations and Enforcement Division.

[FR Doc. 86-17705 Filed 8-6-86; 8:45 am]

BILLING CODE 4910-13-M

ANM